STATE LIBRARY OF PENNSYLVANIA
3 0144 00299855 7

Digitized by the Internet Archive
in 2019 with funding from
This project is made possible by a grant from the Institute of Museum and Library Services as administered by the Pennsylvania Department of Education through the Office of Commonwealth Libraries

https://archive.org/details/vol2nitrocellulo00word

JOHN WESLEY HYATT
Discoverer of Celluloid.

NITROCELLULOSE INDUSTRY

A COMPENDIUM OF THE HISTORY, CHEMISTRY, MANUFACTURE, COMMERCIAL APPLICATION AND ANALYSIS OF NITRATES, ACETATES AND XANTHATES OF CELLULOSE AS APPLIED TO THE PEACEFUL ARTS

WITH A CHAPTER ON

GUN COTTON, SMOKELESS POWDER AND EXPLOSIVE CELLULOSE NITRATES

BY

EDWARD CHAUNCEY WORDEN, PH.C., M.A., F.C.S.

MEMBER SOCIETY OF CHEMICAL INDUSTRY
MEMBER AMERICAN CHEMICAL SOCIETY

IN TWO VOLUMES

VOLUME TWO

324 ILLUSTRATIONS

NEW YORK

D. VAN NOSTRAND COMPANY

23 MURRAY AND 27 WARREN STREETS

1911

Copyright, 1911,

BY

D. VAN NOSTRAND COMPANY

THE SCIENTIFIC PRESS
ROBERT DRUMMOND AND COMPANY
BROOKLYN, N. Y.

TABLE OF CONTENTS

CHAPTER I

Cellulose

PAGE

Classification of Celluloses..... 3
Compound Celluloses..... 3
Separation of Cellulose..... 4
Ash..... 5
Cellulose and Water..... 5
Action of Acids on Cellulose..... 7
Cellulose Hydrates..... 7
Amyloid..... 8
Oxycellulose..... 8
Action of Alkalis on Cellulose..... 9
Action of Oxidizing Agents..... 11
Cotton..... 11
Gathering the Cotton..... 13
Commercial Varieties..... 13
Structure..... 14
Chemical Composition..... 16
Bombax Cotton..... 16
Vegetable Silk..... 17
Wood Fiber..... 17
Alcohol from Wood..... 18
Vulcanized Fiber..... 18
Cellulith..... 19
Cellulose Waterproofing Preparations..... 19
Pergamyn..... 20

CHAPTER II

Cellulose Nitrates

Historical..... 21
The Cellulose Nitrates..... 24
The Nitrates of Eder..... 26
Hexanitrate..... 26
Pentanitrate..... 27
Cellulose dinitrate..... 27
Researches of Vieille..... 28
Investigations of Lunge..... 29
Theory of Nitration..... 35
Commercial Nomenclature of Cellulose Nitrates..... 37
Cellulose used for Nitration..... 38
U. S. Ordnance Requirements..... 41
Properties..... 42
Optical Properties..... 44
Hygroscopicity of Cellulose Nitrates 45
Variations in Solubility and Viscosity..... 47
Stability of the Cellulose Nitrates.. 50
Starch Nitrate..... 54
Nitropentaerythrite..... 57
Nitrates of the Carbohydrates..... 58
Other Nitrated Celluloses..... 59
Nitrates of Hydro- and Oxy-cellulose..... 61
Determination of Solubility..... 62
Estimation of Viscosity..... 63
Determination of Nitrogen by Lunge Nitrometer..... 65
Determination of Nitrogen with the Gas-volumeter..... 66
Determination of Nitrogen Oxides. 69
Determination of Mixed and Spent Acids..... 70
Unaltered Cellulose..... 71
Preparation of Acid-proof Nitrated Filter Cloth..... 72

CHAPTER III

The Nitration of Cellulose

Historical..... 73
Classes of Cellulose Nitrates Produced in the United States..... 75
U. S. Ordnance Requirements for Nitrocellulose Manufacture..... 76

110036

PAGE
Treatment of Cotton Preliminary to Nitration ... 77
Teasing ... 79
Scouring ... 80
Bleaching ... 81
Drying the Cotton ... 82
Acids used in Nitration ... 83
Direct Dipping Process ... 84
Nitration of Cotton by Hand ... 86
Nitration by Centrifugals ... 90
The Thompson Displacement Process ... 96
Nitration of Paper ... 104
Hyatt's Paper Nitration Process ... 107
Nitration of Cotton for Cheaper Grade of Pyroxylin ... 114
Pyroxylins of Low Nitrogen Content ... 115
Other Later Processes ... 117
Washing ... 118
Stabilizing ... 119
Pulping ... 121
Removal of Foreign Bodies ... 123
Poaching ... 124
Blending ... 124
Centrifugal Dehydration ... 124
Dehydration by Hydraulic Pressure ... 127
Drying the Nitrated Cotton ... 129
Fortification and Acid Recovery ... 131
The Evers Denitration Tower ... 137
The Redpath Method of Acid Calculation ... 138
Dangers in Connection with the Nitration of Cellulose ... 142

CHAPTER IV

Solvents and Non-Solvents

History of Nitrocellulose Solvents ... 144
Classes of Solvents ... 159
Acetone ... 166
Ether ... 167
Glacial Acetic Acid ... 167
Nitrobenzene ... 168
Cellulose Nitrate Non-solvents ... 169
Cellulose Non-solvents ... 169
Chloroform ... 170
Carbon Tetrachloride ... 170
The Chlor-ethanes ... 171
Phenyl Acetate ... 172

CHAPTER V

Fusel Oil and the Amyl Alcohols

PAGE
History ... 174
Occurrence of Fusel Oil ... 176
Composition of Fusel Oil ... 176
Methyl Alcohol ... 181
Ethyl Alcohol ... 182
Normal Propyl Alcohol ... 182
*Iso*propyl or Secondary Propyl Alcohol ... 184
Normal Butyl Alcohol ... 184
*Iso*butyl Alcohol ... 185
Amyl Alcohols ... 186
Detection of Amyl Alcohol ... 188
Synthetic Fusel Oil ... 189
Toxic Properties of Fusel Oil ... 200
Rectification of Crude Fusel Oil ... 201
Commercial Uses ... 207
Analysis of Crude Fusel Oil ... 208
Amyl Alcohol, Tests of Purity ... 211

CHAPTER VI

Amyl Acetate

Manufacture of Amyl Acetate ... 214
Charging the Still ... 215
First Fraction ... 219
Second Fraction ... 220
Bottoms ... 220
Aqueous Distillate ... 220
Oily Distillate ... 223
Recovery of Acetic Acid ... 223
Redistilling the Amyl Acetate ... 224
Yields ... 224
Properties and Uses ... 227
Methyl Acetate ... 228
Ethyl Acetate ... 229
Propyl and Butyl Acetates ... 231
Amyl Formate ... 232
Examination of Commercial Amyl Acetate ... 233

CHAPTER VII

Natural, Artificial, and Synthetic Camphor. Camphor Substitutes

Camphor ... 235
Artificial Camphor ... 237
Synthetic Camphor ... 237
Camphor Substitutes ... 248

PAGE
Lowering the Melting-point of Camphor..... 257

CHAPTER VIII

Paint and Varnish Removers. Turpentine Substitutes

Disintegrating Paint Removers.... 260
Solvent Paint Removers..... 262
Proteid-Containing Paint Removers 267
Stripping Paint Removers..... 269
Turpentine Substitutes..... 272

CHAPTER IX

Pyroxylin Solutions

Dissolving Small Amounts of Pyroxylin..... 276
Filtration of Pyroxylin Solutions.. 278
Dissolving..... 279
Filtration..... 287
Storing..... 294

CHAPTER X

Pyroxylin Lacquers, Enamels, and Bronzing Fluids

Collodion Lacquers..... 298
Celluloid Lacquers..... 299
Modern or Amyl Acetate Lacquers. 300
Hale's Process..... 301
Field's Experiments..... 303
Crane's Acetone Oil Lacquers..... 303
Other Amyl Acetate Lacquer Processes..... 304
Classification of Pyroxylin Lacquers 305
Dip Lacquers..... 305
Brush Lacquers..... 306
The Inflammability of Lacquers.... 307
Bronzing Liquids..... 308
Preparation of Gilded Lace..... 311
Imitation Mother-of-Pearl Films... 311
Imitation Gold Leaf..... 312
Heat-Resisting Bronzing Liquids... 313
"Kerosene-Soluble" Bronzing Liquids..... 314
"Water-Soluble" Bronzing Liquids 314
Testing of Bronzing Liquids..... 315
Manufacture of Aluminum and Bronzes..... 315

PAGE
Pyroxylin Lacquers..... 316
Method of Using Pyroxylin Lacquers..... 318
Pyroxylin in Paper Impregnation.. 321
Manufacture of Collapsible Tubes... 322
Coating Sounding Tubes..... 323
Testing of Pyroxylin Lacquers..... 324
Antifouling Compositions..... 327
Preparation of Museum Specimens. 328
Colored Lacquers..... 328
White Enamels..... 332
Modern Celluloid Lacquers..... 333
Resin Lacquers..... 334
Shellac..... 335
Shellac Lacquers..... 336
Burning off Lacquers..... 338
French Bedstead Lacquers..... 338
Pegamoid..... 339
Copal..... 339
Copal Lacquers..... 340
Sandarac..... 341
Mastic..... 343
Black Lacquers..... 343
Pyroxylin-Resin Lacquers..... 345
Pyroxylin and Shellac..... 345
Wood Enamels..... 346
The Coating of Golf Balls..... 349
Lacquering Billiard Balls..... 350
Pyroxylin Floor Lacquers..... 351
Imitating Mahogany, Rosewood, Cocobola and Ebony with Pyroxylin Lacquers..... 351
Pyroxylin and Copal..... 352
Welsbach Mantles..... 352
Cerofirm..... 357
Chemical Examination of Pyroxylin Lacquers..... 358

CHAPTER XI

Imitation Leather and Fur. The Waterproofing of Textiles

Artificial Leathers Containing Leather..... 360
Pyroxylin and Leather-Free Artificial Leathers..... 361
Pyroxylin Containing Artificial Leathers..... 363
Artificial Pyroxylin Leather in the United States..... 367

PAGE
Dyeing the Cloth..... 371
Measuring..... 374
Inspecting..... 375
Cleaning the Cloth..... 375
Stitching..... 377
Coating the Cloth..... 378
Solvent Recovery..... 387
Classes of Artificial Leather..... 388
Calendering..... 390
Embossing..... 390
Varnishing..... 393
Hand Decorated Leather..... 394
Smootching..... 395
Antique Leather..... 396
Uninflammable Artificial Leathers. 397
Deodorizing..... 398
Decreasing Cost of Producing Pyroxylin Artificial Leathers..... 399
Artificial Chamois Leather..... 401
Artificial Sole Leather..... 401
Artificial Split Leather..... 402
Artificial Patent Leather..... 404
Carriage-Top Cloth..... 405
Imitation Cork..... 406
Imitation Furs..... 408
Artificial Feathers..... 410
India-Rubber Substitutes..... 411
Velvril..... 412
Pyroxylin Waterproofing Compositions..... 413
Enameled Paper. Wall Coverings. 418
Printing on Fabrics with Pyroxylin. 421
Imitation Textiles..... 421
Artificial Leather Cements..... 423

CHAPTER XII

Pyroxylin-Coated Enamel and Patent Leathers

Tanning..... 426
Past Processes for the Ornamentation of Leather..... 428
Earlier Methods of Coating Skins with Pyroxylin..... 429
The Process of Field..... 431
A. Kennedy's Method..... 432
Enameling Composition of Byron Goldsmith..... 432
The Adams & McKay Process..... 432
De Montlord's Film Enamel..... 434
PAGE
Classes of Leather Coated with Pyroxylin..... 435
Coating of Buff Splits..... 436
Coating of Grain Splits..... 438
Coating of Flesh Splits..... 442
Chrome Tan-Leather..... 443
Preparation of Patent and Enameled Leather..... 445
Boiling the Linseed Oil..... 446
Preparing the Pyroxylin Solutions.. 447
Applying the Compositions to the Leather..... 449
Production of Colored and Fancy Coatings..... 451
The Coating of Furs and Skins..... 453

CHAPTER XIII

Artificial Filaments

Nitrocellulose Silks..... 459
Chardonnet Silk..... 460
F. Lehner's Artificial Silk..... 471
J. Du Vivier Silk, also termed "Fismes Silk"..... 479
Process of L. Crespin..... 480
Method of M. Denis..... 482
P. Cazeneuve Process..... 484
Other Nitrocellulose Filament Processes..... 484
Denitration of Cellulose Nitrate.... 487
Solvent Recovery..... 492
"Cuprammonium" Silks..... 496
Glanzstoff Silk or Givet Silk..... 501
R. Linkmeyer..... 507
"Cellulo" Silk..... 511
R. Langhans..... 513
Work of E. Crumière..... 514
Ernst Freidrich..... 515
Animal Silk..... 516
Vandura Silk..... 517
Bichromate Silk..... 518
Casein Silk..... 518
Incandescent Electric-Light Filaments..... 520
Artificial Horsehair, Gorse, Whalebone, Hemp, Lint..... 521
Spinning Artificial Filaments..... 526
Comparison of Yarn Sizes..... 542
Dyeing of Artificial Fibers..... 543
Properties of the Artificial Filaments..... 549

PAGE
Polarized Light 551
Tenacity and Durability 552
Moisture 555
The Specific Gravity 556
Chemical Properties of the Artificial Fibers 557
Uses of Artificial Silk 561
The World's Output of Artificial Silk 562

CHAPTER XIV

Celluloid and the Pyroxylin Plastics

Parkesine and Alexander Parkes ... 568
Daniel Spill and Xylonite 571
Zylonite in the United States 572
Pyroxylin Plastic Development in Europe 573
Development of Plastics in the United States 574
The Hyatt Brothers and Celluloid .. 576
Pasbosene, Cellonite, and Pyralin .. 580
The Hyatt Pyroxylin Plastic Process 580
The Manufacture of Pyroxylin Plastics 582
Bleaching the Nitrated Paper 584
Pulping or Beating the Pyroxylin .. 585
Introduction of Coloring Matter 585
Preparation of the Camphor 586
Mixing Pyroxylin and Camphor 587
Introduction of Stabilizing Agents .. 595
The Stabilizing of Pyroxylin Plastics 595
Urea as an Antacid 596
Dehydration of the Pyroxylin Pulp. 599
Solvent Recovery 605
Conversion of Pyroxylin into Plastic 606
Seasoning Crude Pyroxylin Plastic .. 611
The McCaine Method of Seasoning Celluloid 613
The Horace Miller Method of Celluloid Manufacture 614
Denitration of Celluloid 622
Pyroxylin Plastic Manufacture According to Tribouillet & Besancele 622
The Stain's Company Method of Celluloid Manufacture 623
Plastic Manufacture by Intense Cold 623
Uninflammable Pyroxylin Plastics . 624
PAGE
Formation of Plastic Rods and Tubes 630
Manufacture of Hollow Articles from Pyroxylin Plastics 642
Lining Hollow Articles with Celluloid 645
Forming Celluloid Open-Seam Coverings 646
Formation of Celluloid Martingale and Similar Rings 647
Coating Articles with Celluloid 650
Molding Pyroxylin Plastic Objects .. 660
Forming Pyroxylin Plastics into Sheets 668
J. Edson's Method 670
Veneering with Pyroxylin 673
Stained Celluloid Sheets as a Substitute for Glass 675
Celluloid Sheets for Balloons 676
Polishing Celluloid Sheets 676
Embossing Celluloid 678
Dyeing Celluloid 679
Haskell's Finishing Process 681
Factitious Ivory 682
Artificial Horn 687
Tortoise Shell Imitations 689
Imitation Pearl 690
Artificial Coral 690
Imitation Amber 691
Imitation Marble 691
Imitation Onyx 693
Imitation Mosaic 695
Imitation Cloisonné and Champlevé Enamel 697
Metallic Incrustations 698
Inlaying Celluloid with Pigment Colors 698
The Manufacture of Plastic Collars and Cuffs 699
The Manufacture of Pyroxylin Plastic Combs 711
Mounting Stones in Celluloid 715
Manufacture of Brushes 715
Celluloid Mirrors and Mirror Backs .. 718
Depositing Metallic Gold and Silver on Celluloid 719
Dental Plates and Clichés 719
Pyroxylin Plastic in Surgery 721
Celluloid Boxes 723
Golf Balls of Celluloid 724

PAGE
Celluloid Billiard Balls..... 726
Celluloid Stays..... 727
Celluloid Trays and Dishes..... 727
Manufacture of Celluloid Dolls..... 728
Manufacture of Syringes from Celluloid..... 729
Celluloid Emery Grinding Wheels.. 730
Celluloid Linings for Ice Pitchers... 730
Celluloid-Coated Piano Keys..... 731
Pyroxylin Plastic Moldings..... 731
Colored Celluloid Screens for Photography..... 732
Celluloid Playing Cards..... 732
Celluloid in Optics..... 733
Celluloid Phonograph Cylinders.... 733
Celluloid Eyelets..... 735
Ebony Plastic Masses..... 736
Celluloid Cements and Adhesives... 736
Celluloid Pens..... 737
Celluloid Penholders..... 737
Ink for Writing on Celluloid..... 740
Printing on Celluloid..... 741
Printing in Colors..... 744
Factitious Lithographic Stone..... 745
Celluloid Printing Blocks..... 747
Pyroxylin Labels..... 747
Commercial Names of Pyroxylin Plastics..... 748
Pegamoid..... 750
Properties of the Pyroxylin Plastics. 751
Celluloid Substitute according to J. Thornton and C. Seymour.... 756
Celluloid Substitute of H. Assadas.. 757
Formaldehyde-Phenol Celluloid Substitutes, Bakelite and Resinit.... 758
Formol-Albumen Celluloid..... 761
Streubel's Vegetalin..... 761
A. Chanard's Celluloid Substitute.. 762
R. Ortmann's Celluloid..... 762
Imitation Celluloid according to C. Hellriegel..... 762
"Improved" Celluloid of Tessier and Magnier..... 763
Casein Plastics..... 763
Analysis of Celluloid..... 765
Determination of Nitrogen and Cellulose Nitrate..... 767
Determination of Camphor..... 768
Determination of Temperature of Ignition..... 770
PAGE
United States Patents Relating to Pyroxylin Plastics..... 773
English Patents Relating to Pyroxylin Plastics..... 782

CHAPTER XV

Celloidin and the Cellulose Nitrates in Microscopy

Celloidin..... 794
Photoxylin..... 795
Preparation of the Object..... 796
The Celloidin Bath..... 796
Embedding..... 797
Orientation..... 799
Hardening the Celloidin..... 799
Cutting..... 801
Clearing and Mounting..... 802
The "Newer" Celloidin Method.... 803
Gilson's Rapid Process..... 804
Celloidin-Paraffin Embedding Method..... 805
Serial Sections by the Celloidin Method..... 806
Collodionization of Sections..... 808
Celloidin Injection Mass..... 809
Celloidin or Collodion Sacs..... 810
Physical Properties of Collodion Membranes..... 812

CHAPTER XVI

Collodion and the Cellulose Nitrates in Pharmacy and Medicine

The Pharmacopœal Collodions..... 816
Collodium Cantharidatum..... 816
Iodoform Collodion..... 819
Salicylated Collodion..... 820
Collodion Stypticum..... 820
Method of Preparing Collodion by U. S. Pharmacopœia VIII..... 820
Official Method of Pyroxylin Manufacture..... 821
National Formulary Collodions.... 823
Proprietary Collodions..... 823
Uses..... 824
Analytical..... 825

CHAPTER XVII

The Cellulose Nitrates in Photography. Emulsions, Films, and Processes

PAGE
Historical 828
Collodion Emulsion 829
Printing-out Silver Emulsion 833
Collodion Emulsion without Color or Alkaloidal Sensitizers 833
Collodio-Chloride Process 836
Collodion Dry Plates for Acid and Alkaline Development 838
Manufacture of Collodion Photographic Films 839
Film Negatives 844
Stripping Collodion Negatives 845
Continuous Photographic Films 845
Drying Continuous Films 863
Sensitizing Continuous Films 866
Chronophotography, Motography 866
Lantern Slides, Opals, and Transparencies 869
Ferrotypes and Direct Positives on Glass 873
Photographing on Wood 876
Isochromatic Collodion Emulsion 877
Collodion in Color Photography 878
Collodion Color Screens for Photography 880
The Collodio-Albumen Process 884
Silver Phosphate Emulsions 885
Reproduction of Images on Glass, Ceramic, or other Surfaces by Collodion 885
Line Production and Half-Tone Work 887
Collodion in the Manufacture of Balloons 890
Inflammability of Photographic Films 891
Photographic Lacquers and Pyroxylin Formulas 892
Physical Testing of Collodion Films. 894
The Chemical Examination of Photographic Films 897

CHAPTER XVIII

Guncotton, Smokeless Powder and the Explosive Cellulose Nitrates

Gunpowder 898
PAGE
Smokeless Powders 899
Cellulose Nitrate Smokeless Powders 899
Manufacture of Pyrocollodion Smokeless Powder in the United States 902
Solvent Displacement Dehydration with Alcohol 903
Colloiding the Nitrocellulose 906
Pressing the Colloid into a Solid Cylinder 911
Marcaroni Filtering Press 913
Formation of Colloid into Strips or Rods 915
Smokeless Powder Cutter 921
Preliminary Solvent Recovery 922
Final Drying of the Powder 923
Glazing 925
Blending 925
Ballistite 926
Cordite 928
Moddite 937
Axite 937
U. S. Army Powder Factory 937
Indian Head Powder Factory 938
Maximite 939
Maxim-Schüpphaus Powder 940
Bernadou Powder 941
Explosive D 941
Bulk and Condensed Powder 941
Sporting Powder 944
Guncotton Dynamite 945
Blasting Gelatin and Gelatin Dynamite 946
Nitrated Guncotton 950
du Pont Powders 951
du Pont 1909 Military 952
W. A. .30-cal. Powders 952
.30 -cal. U. S. Army Rifle Powder 953
Bullseye Powder 953
Lightning Powder 953
Sharpshooter and Unique Powder. 953
Marksman Powder 954
du Pont No. 1 Rifle Smokeless Powder 954
Schuetzen Rifle Powder 954
Infallible Smokeless Powder 955
Ballistite Smokeless Shotgun Powder 955
du Pont Smokeless Powder 955
Hazard Shotgun Smokeless Powder 955

PAGE
E. C. Improved Shotgun Smokeless Powder 955
New Schultze Powder 956
Empire Smokeless Shotgun Powder 956
King's Semi-Smokeless Powder 956
Lesmok Powder 957
The Gentieu and Waddell Method of Smokeless Powder Manufacture 957
Amberite 959
Smokeless Diamond Powder 960
Rifleite Powder 960
J. B. Powder 960
Tonite 961
Saxonite 961
Oarite 962
Henrite 962
French Powders 962
Walsrode Powders 963
Troisdorf Powder 963
Wetteren Powder 963
Von Förster Powder 964
Cibalite 964
Mullerite No. 1 and 2 964
Cooppal Powders 964
Matagnite 964
" Normal " Smokeless Powder. 964
Japanese Smokeless Powder 965
Guncotton Blocks 965
Nitrocotton and Picric Acid 967
Flash-light Composition 968
Stability Tests 968
The Vieille Test 969
U. S. Ordnance Methods of Testing 969
Ordnance Department 115° Test ... 973
Explosion Test 973
Will's Stability Test 974
The Guttmann Stability Test 976
Bergmann and Junk Test 977
Waltham Abbey Silvered Vessel Test 978
The Abel Heat Test 979
The Firing Point of Explosives 982
Testing Explosive Gelatin, Gelatin Dynamite, etc 983
Liquefaction Test of Explosive Gelatin 984
Exudation Test 984

CHAPTER XIX

Cellulose Acetates

PAGE
Historical 985
Chemistry 988
Methods of Manufacture 991
Manufacture with Dehydrating Agents 992
Formation of Cellulose Acetates from Regenerated Cellulose 1000
Purification 1002
Cellulose Tetracetate 1003
Cellulose Formate 1004
Cellulose Propionate 1006
Starch Acetate, Starch Formate .. 1007
Cellulose Acetate Plastics 1010
Cellit 1016
Sericose 1022
Dyeing 1023
Acetate Lacquers 1027
Acetate Bronzing Liquids 1028
Cellestron Silk and Artificial Filaments from Cellulose Acetate .. 1032
Solidified Spirit, Smaragdin 1035
Analytical 1036

CHAPTER XX

Viscose and the Cellulose Xanthates

Historical 1055
Alkali-Cellulose 1057
Thiocarbonates and Xanthates 1058
Cellulose Xanthate 1059
Maturing or Aging the Viscose 1061
Precipitating or Fixing the Viscose 1062
Transformation of Coagulated Viscose into Cellulose 1066
Purification of Viscose 1066
M. Waddell's Method of Viscose Formation 1070
Filtration of Viscose Solutions 1072
Removal of Air from Viscose Solutions 1075
Properties of Viscose Solutions ... 1076
Storing Alkali-Cellulose and Viscose 1077
Artificial Filaments from Viscose .. 1077
Artificial Viscose Filaments According to Stearn 1087
Viscelline and Licella Yarn 1089
Bleaching of Viscose Silk 1090

PAGE
Dyeing of Viscose.....1091
Preparation of Viscose in the Form of a Dry Powder..... 1091
Viscose in Sheets..... 1092
Viscose Films..... 1093
Manufacture of Photographic Films from Viscose..... 1093
Viscoid Masses..... 1096
Manufacture of Hollow Articles from Viscose..... 1099
Electric Lamp Filaments from Viscose..... 1099
Sizing Paper with Viscose..... 1099
Viscose as a Paint Material..... 1103
Artificial Leather from Viscose.... 1103
Viscose for Wall Paper..... 1106
Cellulose Xanthate as Substitute for Wood and Horn..... 1107
Viscose in Cloth Printing..... 1107
Fixing Viscose on Textiles..... 1108
Starch Xanthate..... 1111
Cellulose Nitrites..... 1111
Quantitative Determination of Xanthates..... 1112

CHAPTER XXI

Denatured Ethyl Alcohol

Denaturing Agents—Completely Denatured Alcohol..... 1114
Methyl Alcohol..... 1115
Benzine..... 1116
Pyridin Bases..... 1117
Denaturants Deposited in Warehouse..... 1117
Manner of Handling and Testing Samples of Denaturants..... 1118
How Denatured Alcohol Shall be Gauged..... 1118
Survey of Distilleries..... 1119
Distilleries to be Divided into Two Classes..... 1121
Kind of Spirits that Can be Manufactured..... 1121
Denaturing Material to be Tested and Handled Same as at Denaturing Bonded Warehouses..... 1121
How Alcohol Must be Weighed... 1122
How Gallons May be Determined. 1122
PAGE
Completely Denatured Alcohol.... 1123
Denatured Alcohol not to be Stored on Certain Premises, nor Used for Certain Purposes..... 1123
Denatured Alcohol not to be Used as Component Part of Beverages or Medicinal Preparations..... 1123
Permits Required..... 1124
Permits in Force until Canceled... 1124
Consumer to Obtain Permit..... 1124
Denatured Alcohol not to be Delivered unless Consumer Has Permit..... 1125
Mixing Denatured Alcohol..... 1125
Manner in which Denatured Alcohol Can be Retailed..... 1126
Manufacturers Using Completely Denatured Alcohol to Secure Permit..... 1126
Manufacturer to Send Notice to Consumer..... 1127
Denatured Alcohol to be Kept in Room Set Aside for that Purpose..... 1127
Manufacturer's Application for Permit..... 1127
Formula for Special Denaturants to be Submitted to the Commissioner..... 1128
Application for Permit to Use Special Denaturants..... 1130
Storeroom to be Set Aside. How Constructed..... 1131
Specially Denatured Alcohol Storage Tanks..... 1131
Alcohol to be Used as Received... 1132
Provisions Applicable to Manufacturers Using Either Specially or Completely Denatured Alcohol.. 1132
Alcohol to be Restored on Premises where Used or in a Restoring Plant..... 1133
Still May be Used..... 1133
Application to be Filed..... 1133
Alcohol to be Stored in Storeroom as Recovered..... 1133
Manufacturer to Keep Record and Send Notice of Shipments..... 1134
Notice to be Sent to Collector.... 1134
Recovered Alcohol May be Col-

PAGE

lected in Receiving Tanks Outside of Storeroom..... 1135
Tanks to be Used for Receiving Recovered Alcohol and for Storing Recovered and Restored Alcohol..... 1135
Recovered and Restored Alcohol to be Gauged by Weight..... 1135
Metal Pipes to be Used in Transferring Restored and Recovered Alcohol..... 1135
Use of Restored Alcohol or Storage Tanks to Redenature Alcohol.. 1136
Reuse of Denatured Alcohol Recovered in Original Denatured State..... 1136
Records and Tanks..... 1137
Redenaturation..... 1137
Official Inspection, Samples, etc... 1138
Application to Have Alcohol Restored and Denatured..... 1138
Restoring, Redenaturing and Gauging Alcohol..... 1138

PAGE

Alcohol not to be Redenatured Unless Necessary..... 1139
Special Denaturants..... 1139
Denaturants Authorized in Various Industries..... 1141

CHAPTER XXII

Appendix

Transportation of Explosives and Inflammable Materials..... 1142
Transportation of Smokeless Powder for Cannon and Small Arms..... 1143
Flash Point of Inflammable Liquids..... 1144
Inflammable Liquids, Placarding for Transportation..... 1145
Tables..... 1146
Errata..... 1148
Index of Patents..... 1149
Name Index..... 1165
Subject Index..... 1187

LIST OF ILLUSTRATIONS

FIGURE		PAGE
	Christian Frederick Schönbein	*Frontispiece*
1.	Cotton Fiber (Magnified)	15
2.	Cochius Viscosometer	64
3.	Lunge Two-Bulb Nitrometer	65
4.	Lunge Gas-Volumeter	67
5.	The Davis & Furber Mixing Picker for Cotton	79
6.	The Cogswell Mill for Picking Cotton	80
7.	Selwig & Lange Nitrating Centrifugal, with "Acid Circulation" (Side View)	92
8.	Selwig & and Lange Nitrating Centrifugal, with "Acid Circluation" (Top View)	92
9.	Wolfshohl Automatic Cotton Steeping Appliance for Nitration	94
10.	Thompson Displacement Apparatus for Cotton Nitration (Sectional Elevation)	96
11.	Thompson Displacement Apparatus for Cotton Nitration	97
12.	Thomson Displacement Process at Picatinny, N. J.	98
13.	Selwig & Lange Guncotton Conveyor	103
14, 15.	Schüpphaus & White Method of Paper Nitration	105
16, 17.	Mowbray's Paper Nitrating Apparatus	106
18.	The Tribouillet and Besancle Nitrating Apparatus	107
19.	Hyatt Tissue Paper Nitrator. Top View of Disintegrating Apparatus	110
20.	Hyatt Tissue Paper Nitrator. Vertical Longitudinal Section. Fig. 19	110
21.	Hyatt Tissue Paper Nitrating Apparatus. Plan View Showing Convertors	111
22.	Hyatt Tissue Paper Nitrator. Side View of Fig. 21	111
23, 24.	Currier Pulper and Refining Engine	122
25, 26.	Nitrating Acid Storage Tanks	122
27.	Selwig & Lange Centrifugal Pyroxylin Dehydrator	126
28.	Tolhurst Hydro-Extractor Arranged with Bottom Discharge	127
29.	Sectional View of Fig. 28	128
30.	Currier Two-Plunger Hydraulic Dehydrator	129
31.	Emil Passburg Patent Drying Chamber (J. P. Devine, Buffalo, N. Y.)	132
32.	Passburg Safety Vacuum Drying Apparatus for Fulminates and Nitrocellulose	133
33, 34.	Fairbank's Scale for Weighing Nitrating Acid	136
35.	Chart *A* for the Redpath Graphic Method of Nitrating Acid Calculation	140
36.	Chart *B* for the Redpath Graphic Method of Nitrating Acid Calculation	141
37.	Fusel Oil Rectifying Still. (Vulcan Copper Works Design)	202
38.	The Wöllbrink Benzine Purifier	205
39.	Volumetric Flask	209
40.	Three Bulb Ladenburg Fractionation Flask	209
41.	U. S. Government Fusel Oil Tester	209
42.	John Henry Stevens	*Facing Page* 213
43.	Spirit Rectifying Apparatus for the Recovery of Lower Alcohols and Acetates from Aqueous Solutions as designed by the Vulcan Copper Works, Cincinnati, Ohio	222
44.	The Commercial Manufacture of Amyl Acetate	225
45.	The Wilson Mechanical Finish Remover	270

FIGURE PAGE
46. The Coles Shaker ... 276
47. Dudley Shaking Arrangement for Four Solutions ... 276
48. The Rabe Shaker ... 276
49. The Wagner Continuous Shaker with Power Attachment ... 277
50. The J. H. Day Co. Jar Mill or Triturator ... 277
51. Urinary Centrifuge Useful for Quickly Clarifying Pyroxylin Solutions ... 278
52. Wegelin & Hubner Experimental Filter Press ... 279
53. Pump for Emptying Barrels and Drums of Solvent ... 279
54. The Day Pyroxylin Mixer for Thin Solutions ... 280
55, 56. Pyroxylin Mixers in Group of Two ... 281
57. The Day Paragon Liquid Mixer ... 281
58. The Kent Mixer in Series for Heavy Solutions (Kent Machine Works, Brooklyn, N. Y.) ... 281
59. The Day Heavy Mixer with Gate ... 282
60. The J. H. Day Dough Mixer for Heavy Pyroxylin Solutions ... 282
61. Kent Cracking Mill for Grinding Resins ... 283
62. Kent Cracking Mill. (Opened.) ... 283
63. Day's Revolving Varnish and Sheliac Cutter and Mixer ... 284
64. Harris Paint Mill No. 3 (J. H. Day Co.) ... 284
65. The Harris Improved Mill ... 285
66. Kent Machine Co. Double Automatic Pigment Grinder ... 286
67. Open Head Barrels for Heavy Mixtures ... 287
68. Tank for the Storage of Lacquers ... 289
69. The Stebbins Faucet for Volatile Liquids ... 289
70. The Combination Shut-off Faucet and Gate ... 289
71. The T. Shriver Plate Filter Press (Harrison, N. J.) ... 290
72. The De Laval Centrifugal Varnish Filter ... 291
73. Sectional View of Filtering Chamber of the DeLaval Centrifugal Filter ... 292
74. Upright Glass-Lined Steel Tank for Lacquer Storage (Pfaudler Type) ... 293
75. Glass-Lined Steel Tank for the Storage of Cellulose Nitrate Solutions (Pfaudler Co. Rochester, N. Y.) ... 293
76. The Paneled Lacquer Shipment Can ... 294
77. Evenden's Patent Jacket Can ... 294
78. Tin Cup to Cover Varnish Can Nozzle after Opening ... 295
79. Varnish Can Sealer Used for Crimping Metal Caps ... 295
80. Varnish Can Cap or Seal ... 295
81. The Martini Process for Storing Inflammable Solutions ... 296
82. Crane's Method for Lacquering with Pyroxylin ... 319
83. Lacquering Small Objects with Pyroxylin ... 319
84. The Bachia Lacquer Brush Holder ... 337
85. A Roller Lacquering Machine ... 341
86. The Lübbertsmeier Continuous Lacquering Machine ... 341
87. The Kramer Method of Lacquering the Interiors of Cans and Casks ... 341
88. The Hammond Method of Lacquering Golf Balls ... 350
89. Lacquering Golf Balls According to Armitage ... 350
90. The Page Method of Lacquering Golf Balls ... 350
91. The Moliter Mechanical Painting Device ... 351
92. Drying Incandescent Mantles after Being Shrunk on the Models ... 353
93. Cutting the Mantles into Proper Length before Shrinking the Fabric ... 354
94. Apparatus for Immersing the Mantles in the Pyroxylin Solution ... 355
95. Forming the Fabric for the Mantles ... 356
96. Color Mixers with Stirrers ... 371
97. The Croplin & Crowe Color Strainer ... 372
98. The H. W. Butterworth Dyeing Jigger ... 372
99. The H. W. Butterworth Cloth Squeezer ... 373
100. 20-Cylinder Upright Drying Machine. (H. W. Butterworth & Sons Co.) ... 374
102. The Curtis & Marble Calendar Rolling Machine with Adjustable Measuring Attachment ... 375
103. Counting Register for Measuring Cloth ... 375
104. The Curtis & Marble Cloth Winder and Measurer ... 376
105. Cloth Inspecting Machine with Reverse-Motion and Rolling Head ... 376
106. The Heath Patent Vertical Brusher ... 377

FIGURE PAGE
107. Railway Sewing and Rolling Machine (Curtis & Marble Co.) 377
108. Portable Hand Power Railway Sewing Machine (Curtis & Marble Co.). . . 378
109. Belt Power Railway Sewing Machine (Curtis & Marble Co.)..... 378
110, 111, 112, 113. The Cyrus Currier Pyroxylin Coating Machine. .. 382, 384, 386
114. The Farrel Standard Three-Roll Calender..... 390
115. The Cyrus Currier & Sons' Three-Roll Embossing Machines..... 391
116. The Geo. H. Ohl Plate Embossing Press..... 391
117. The Currier Steel Embossing Press..... 392
118. The Love Polishing Hand Glove 397
119. Waterproof Cloth According to A. Kennedy 418
120. Conversion of Collodion into Artificial Silk. (From Sci. Amer. Suppl. No. 1156, p. 18470.)..... 462
121. De Chardonnet Apparatus for Making Artificial Silk. (Transverse Section) 463
122. De Chardonnet Apparatus for Making Artificial Silk. (Front Elevation.) 463
123. De Chardonnet Apparatus for Making Artificial Silk, showing the Spinning Devices 464
124. The De Chardonnet Apparatus for Making Artificial Silk 465
125. De Chardonnet Spinning Devices. (Side Elevation.) 465
126. De Chardonnet Apparatus for Making Artificial Silk 466
127, 128. Improved Chardonnet Process for Artificial Silk Manufacture..... 467
129, 130. Improved Chardonnet Process for Artificial Silk Manufacture..... 468
131. The Lehner Process for Making Artificial Silk..... 472
132. The Lehner Apparatus for Making Artificial Silk 475
133. The Lehner Apparatus for Making Artificial Silk 476
134. The Crespin Process of Making Artificial Silk 481
135. The Denis Machine for Producing Threads from Collodion and Recovering the Solvents of Nitrocellulose or Cellulose 483
136. The Denis Machine for Producing Threads from Collodion 483
137. Washing Artificial Filaments According to Fremery and Urban 514
138. Linkmeyer Process for Manufacturing Glossy Cellulose Threads 510
139. The Thiele Artificial Silk Spinning Apparatus..... 510
140. The Thiele Spinning Apparatus, Showing the Method of Winding the Filaments 512
141. The Ratignier and Pervilhac Artificial Lace Machine..... 524
142. The Lumière Spinning Mechanism..... 527
143. Method of Hardening Artificial Filaments According to Crombie..... 529
144. The Waddell Apparatus for Forming Filaments 533
145. The Waddell Apparatus for Forming Filaments 534
146. The Waddell Apparatus for Forming Filaments 535
147. The Strehlenert Method of Spinning and Twisting Artificial Fibrous Material..... 538
148. The Friedrich Spinning Apparatus..... 541
John Wesley Hyatt.....*Frontispiece to Vol. II*
149. Cylinder Paper Making Machine..... 589
150. The Schmerber and Arrault Plastic Grinder and Mixer..... 590
151. Combining Pyroxylin with Camphor..... 591
152. The Hyatt & Everding Process for Making Solid Pyroxylin Compounds . . 592
153. The Hyatt Pyroxylin Plastic Mixer..... 593
154. The Hyatt Method of Combining Pyroxylin and Its Solvents..... 594
155. The Hyatt Hydraulic Pyroxylin Press 600
156. The Hyatt, Wood & Stevens Pyroxylin Pulp Desiccator..... 600
157. The Hyatt, Wood & Stevens Pyroxylin Pulp Desiccator..... 601
158. The Hyatt, Wood & Stevens Pyroxylin Pulp Desiccator..... 602
159. Apparatus for the Manufacture of Celluloid According to France 603
160. Pyroxylin Plastic Masticating Machine..... 608
161. The Miller Apparatus for Drying Pyroxylin Plastics 609
162. The Miller Apparatus for Drying Pyroxylin Plastics 610
163. The Edson Method of Drying Celluloid..... 612
164. Celluloid Manufacture According to Miller 615
165. Celluloid Manufacture According to Miller..... 616
166. Celluloid Manufacture According to Miller..... 617

FIGURE PAGE
167. Celluloid Manufacture According to Miller 618
168. The Monroe Process for Utilizing Celluloid Scrap 618
169. The Kitsee Distillation Method of Celluloid Scrap Recovery 619
170. The Garbin Apparatus for Utilizing the Waste of Celluloid 620
171. The Garbin Apparatus for Utilizing the Waste of Celluloid 621
172. The Hyatt Apparatus for Manufacturing Pyroxylin 631
173. Hyatt's Apparatus for Manufacturing Pyroxylin 632
174. The Carpenter Apparatus for Molding Hollow Celluloid Forms 634
175. Hyatt's Apparatus for Manufacturing Pyroxylin 634
176. The Edson Method for Making Celluloid Rods and Tubes 635
177. The Olszewski Machine for the Rapid Conversion of Celluloid 636
178. The Olszewski Apparatus for Producing Plastic Rods and Tubes 637
179. The Olszewski Apparatus for Producing Plastic Rods and Tubes 638
180. The Olszewski Apparatus for Producing Plastic Rods and Tubes 638
181. The Gilmore Stuffing Machine for Manufacturing Pyroxylin Rods and Tubes 639
182. Stuffing Machine for Manufacturing Pyroxylin Rods and Tubes, According to Gillmore 639
183. The Gillmore Stuffing Machine for Manufacturing Pyroxylin Rods and Tubes 640
184. Producing Hollow Celluloid Articles, According to Hyatt 641
185, 186. Manufacturing Hollow Pyroxylin Articles. (Ward's Process) 643
187. The Lefferts Process for Lining Hollow Articles with Celluloid 645
188. Forming Celluloid Open Seam Coverings 647
189. Forming Solid Celluloid Rings, According to Lockwood 648
190. Forming Solid Celluloid Rings, According to Lockwood 649
191. The Kipper Process for Making Solid Pyroxylin Rings 649
192. Coating Articles with Celluloid According to Hyatt 650
193. The Hyatt and Burroughs Apparatus for Coating Bars on Springs with Celluloid 651
194. The Hyatt and Burroughs Apparatus for Coating Bars or Springs with Celluloid 652
195. Hyatt's Method for Coating Picture Moldings 653
196. The Hyatt Press for Coating Articles with Celluloid 654
197. The Hyatt Press for Coating Articles with Celluloid 655
198. The Hyatt Press for Coating with Celluloid 656
199. Kipper's Process for Coating Handles with Pyroxylin 657
200. Coating Handles with Pyroxylin According to France 658
201. Manufacturing Pyroxylin Handles According to France 658
202. Thurber's Apparatus for Forming Pyroxylin Articles 659
203. Thurber's Apparatus for Forming Hollow Pyroxylin Articles 659
204. Hyatt's Method of Solvent Expulsion 661
205. The Hunt Apparatus for Softening and Molding Celluloid 662
206. Manufacture of Celluloid Collar and Cuff Buttons (Horace Miller's Patent) 662
207. Lockwood's Method of Manufacturing Celluloid-Coated Articles 663
208. Manufacturing Celluloid-Coated Articles by the Davis Patents 663
209. The Furman Method of Molding Mouthpieces for Whistles, etc., of Celluloid 664
210. Molding Hollow Celluloid Articles According to Furman's Method 665
211. Molding Small Celluloid Articles 665
212. The Miller Machine for Molding Pyroxylin Plastics 666
213. The Miller Machine for Molding Pyroxylin Plastic Articles 667
214. The Miller Machine for Molding Pyroxylin Plastic Articles 667
215. The Edson Apparatus for Forming Thin Plastic Sheets 671
216. Edson's Apparatus for Forming Very Thin Pyroxylin Sheets 672
217. Veneering with Pyroxylin According to McClelland 674
218. Polishing Sheets of Pyroxylin Material. (Schmidt's Patent.) 677
219. The Edson Process for Polishing Sheets of Pyroxylin Plastic 678
220. The Haskell Finishing Process 681
221. Manufacturing Celluloid Articles, According to the Method of Chickering 684
222. The Kipper Method of Forming Solid Celluloid Rings 686
223. The Harvey Process for Producing Artificial Horn from Celluloid 688

FIGURE PAGE
224. Manufacture of Pyroxylin Compounds in Imitation of Marble 692
225. Showing Method of Matching Mottled Celluloid Sheets (A) in Imitation of Marble and Onyx 693
226. The Stevens and Harrison Process for Producing Imitation Onyx from Pyroxylin Plastics 694
227. The Stevens and Harrison Process for Producing Imitation Onyx from Pyroxylin Plastics 695
228. The Harrison and Thurber Method of Producing Pyroxylin Imitations of Mosaic 696
229. Pyroxylin Imitation of Mosaic According to France 696
230. Sanborn's Method of Forming Celluloid Collars and Cuffs 701
231. The Cary Machine for Creasing, Bending and Shaping Celluloid Collars 702
232. The Kipper Celluloid Collar and Cuff 703
233. The Jarvis Celluloid Collar or Cuff 703
234. The Hyatt Non-Rattling Celluloid Cuff 705
235. The Kipper Celluloid Collar or Cuff 706
236. Waterproof Collar, According to France 706
237. The Kipper Reversible Celluloid Collar or Cuff 708
238. Celluloid Comb Manufacture 712
239. Celluloid Comb Manufacture, According to Hyatt 712
240. Celluloid Comb Manufacture, According to Hyatt 713
241. Hyatt's Process for Manufacturing Celluloid Combs 713
242. Manufacture of Celluolid Articles. (Hackenberg's Patent.) 714
243. Mounting Stones in Celluloid 715
244. Manufacture of Celluloid Brushes 716
245. The Miller Method of Celluloid Tooth Brush Manufacture 716
246. The Miller Celluloid Brush 717
247. The Hafely Method of Making Celluloid Boxes 724
248. The Stevens & Thurber Process for Making Celluloid Golf Balls 725
249. The Hyatt "Gun Method" of Celluloid Billiard Ball Manufacture 726
250. Forming Celluloid Articles. (The Thurber & Schaefer Process.) 728
251. The Carpenter Process of Necking Celluloid Tubes 728
252. Celluloid Syringes According to Lefferts 729
253. Lefferts' Method of Celluloid Lining of Ice Pitchers and Vessels of a Similar Nature 730
254. Making Celluloid Piano Keys 731
255. Manufacture of Celluloid Moldings 731
256. Carpenter's Process of Reducing Celluloid Tubes to Taper 738
257. Molding Hollow Articles from Celluloid. (Furman's Patent.) 739
258. Process of Making Pyroxylin Labels According to Lansing 748
260. The Todd Process of Forming Films 841
261, 262. The Reichenbach Method of Manufacturing Flexible Photographic Films 847
263. The Reichenbach Method of Manufacturing Flexible Photographic Films 848
264. The Reichenbach Apparatus for Manufacturing Photographic Films 849
265. The Reichenbach Apparatus for Manufacturing Photographic Films 850
266. Pyroxylin Coating of Paper. (Reichenbach) 851
267. The Stevens & Lefferts Apparatus for Producing Pyroxylin Sheets 853
268. The Stevens & Lefferts Apparatus for Producing Pyroxylin Sheets 854
269. Process of Making Nitrocellulose Sheets. (F. A. Anthony.) 856
270. Process of Making Nitrocellulose Sheets. (F. A. Anthony.) 856
271. The Thornton Film Coating Machine 858
272. Coating Nitrocellulose Films. (Cossett's Method.) 860
273. The Thompson Film Drying Machine 864
274. The Thompson Film Drying Machine 865
275. The Thompson Film Drying Machine 865
276. Randall & Stickney Paper Gauge 894
277. The Mullen Film Tester 895
278. Running Pulped Nitrocellulose through the "Wet Machine" 904
279. Exposing Nitrocellulose to Dust and Dirt in Open Tubs 904
280. Pyroxylin Hydroextractor 905

FIGURE PAGE
281. A Block or "Cheese" of Nitrocotton as Taken from the Hydraulic Dehydration Press ... 905
282. Mastodon Mixer ... 907
283. Transferring the Colloided Pyrocollodion from Mechanical Mixer to Storage Cans ... 909
284. Hydraulic Pyrocollodion Blocking Press ... 909
285. Macaroni Hydraulic Filtering Press for Mixing and Straining Pyrocollodion ... 909
286. 287. Nitrocellulose Wash House ... 910
288. Hydraulic Filtering or "Macaroni" Press, for Removal of Solid Impurities from Colloided Nitrocellulose ... 911
289. Macaroni Press, Under Side, Showing Strings of Filtered Colloid ... 912
290. Hydraulic Pyrocollodion Blocking Press ... 912
291. Smokeless Powder Manufacture ... 913
292. Hydraulic Guncotton Press Valve, by Means of which the High and Low Pressures are Regulated ... 914
293. Formation of Smokeless Powder Grains ... 915
294. Formation of Smokeless Powder Grains for Small Arms ... 916
295. Finishing Press for Pyrocollodion Powder ... 917
296. Hydraulic Powder-forming Press Head ... 917
297. Section of Fig. 296 ... 918
298. End View of Hydraulic Finishing Press for Smokeless Powder Manufacture ... 918
299. Partly Consumed Grains of 12-in. Gun Smokeless Powder ... 919
300. Smokeless Powder of Various Forms and Sizes Designed for Different Calibers of Naval Guns ... 919
301. The du Pont Apparatus for the Manufacture of Explosive Powder in Strips ... 920
302. Smokeless Powder Cutter ... 921
303. The Nikolsky Apparatus for Distilling off and Recovering Solvent Used in Explosives ... 923
304. Smokeless Powder Grains Undergoing Solvent Expulsion in the Dry House ... 924
305. Pressing Cordite ... 928
306. Cordite Kneading Machine ... 930
307. Re-Reeling (Blending) of Cordite ... 931
308. A Rifle Cordite Press ... 932
309. Cordite Drying Room ... 933
310. The Gentieu and Waddell Process of Smokeless Powder Manufacture ... 958
311. Will's Apparatus for Testing Nitrocellulose as Modified by Roberts ... 975
312. French Viscose Purifier ... 1070
313. The Ernst and Hamlin Viscose Filter ... 1074
314. The Naudin Apparatus for Extracting Air and Carbon Bisulphide from Viscose Solutions ... 1075
315. The Ernst Method of Forming Viscose Filaments ... 1079
316, 317, 318, 319. The Waddell Apparatus for Forming Metamorphosed Cellulose Filaments ... 1083
320. The Waddell Filament Forming Apparatus ... 1084
321. The Delubac Viscose Thread Producing Apparatus ... 1086
322. The Delubac Viscose Thread Forming Apparatus ... 1086
333. Producing Cellulose Photographic Films According to Chorley ... 1094
324. The Stearn Filament Apparatus for Incandescent Electric Lamps ... 1100

ABBREVIATIONS

A.A.A.S.	American Association for the Advancement of Science
Anon.	Anonyme
A.O.A.C.	Association of Official Agricultural Chemists
abs.	absolute
Act.	Actien
alc.	alcohol ethyl
alk.	alkaline
amp.	ampere
amt.	amount
approx.	approximate
at.	atom, atomic
atm.	atmosphere(s)
atm. pr.	atmospheric pressure
as-	asymmetric
av.	average
b.	boil(s), boiling
b. pt.	boiling point
c.	asymmetric carbon atom
cal.	calorie
cc.	cubic centimeter
chem.	chemical
com.	commercial
comp.	composition
compd.	compound
conc.	concentrat-ed, ion
cor.	corrected
c.p.	candle power
crys.	crystals, crystallized
cu.m.	cubic meter
cwt.	hundredweight
d-	dextro
d.	density
dcm.	decimeter
dil.	dilute
dr.	dram
fl.	fluid
f. pt.	freezing point
gal.	U. S. gallon, 3785 cc.
Ges.	Gesellschaft
gm.	gram (8)
gr.	grains
hr.	hour(s)
insol.	insoluble
in.	inch
k.	kilogram
kw.	kilowatt
l.	liter(s)
l-	laevo
lab.	laboratory
Ltd.	Limited
m.	meter
m-	meta
mfr.	manufacturer
mfg.	manufacturing
mgm.	milligram
min.	minute(s)
mm.	millimeter
mol.	molecule(s)
mol. wt.	molecular weight
m. pt.	melting point
nor.	normal
o-	ortho
ord.	ordinary
oz.	Avoirdupois ounce
p-	para
pp.	precipitate
pt.	pint
qt.	quart
quant.	quantitative
recryst.	recrystallized
sat.	saturate(d)
sc.	scruple
sec.	second(s)
soln.	solution
Soc.	Société
sp. gr.	specific gravity
sq.	square
sym-	symmetrical
temp.	temperature(s)
v-	vicinal
vac.	vacuum
vol.	volume(s)
wt.	weight
°	degrees Centigrade
%	percent by weight

ABBREVIATIONS OF REFERENCES TO LITERATURE

A.	The Analyst
Acad.	Mémoires de l'Académie des Sciences
Agr. J. India	Agricultural Journal of India
Alk.	Alkohol
Am. Annual Phot.	American Annual of Photography
Am. Brewers Rev.	American Brewers Review
Am. Apoth. Z.	Deutsch-Amerikanische Apotheker Zeitung
Am. Chem.	American Chemist
Am. Chem. J.	American Chemical Journal
Am. Drug.	American Druggist and Pharmaceutical Record
Am. Electrochem. Soc.	American Electrochemical Society
Am. Food J.	American Food Journal
Am. J. Med. Sci.	American Journal of the Medical Sciences
Am. J. Pharm.	American Journal of Pharmacy
Am. J. Physio.	American Journal of Physiology
Am. J. Sci.	American Journal of Science
Am. Mach.	American Mahcinist
Am. Mon. Micr. J.	American Monthly Microscopical Journal
Am. Nat.	American Naturalist
Anat. Anzeig.	Anatomische Anzeiger
Ann.	Liebig's Annalen der Chemie
Ann. Bot.	Annals of Botany
Ann. chim. anal.	Annales de chimie analytique
Ann. chim. farm.	Annali di chimica e de farmacologia
Ann. chim. phys.	Annales de chimie et de physique
Ann. inst. Pasteur	Annales de l'Institut Pasteur.
Ann. m.	Annales des mines
Ann. Pharm.	Annales de Pharmacie, Louvain
Ann. Phil.	Annals of Philosophy
Ann. Physik.	Annalen der Physik
Ann. Surg.	Annals of Surgery
Apoth.	Apothecary, Boston
Apoth. Ztg.	Apotheker Zeitung
Arb. Kais. Gesundh.	Arbeiten aus dem Kaiserlichen Gesundheitsamte
Arch. Anat. Phys.	Archiv für Anatomie, Physiologie und Wissenschaftliche Medicin
Arch. belges de méd. mil.	Archives belges de médicine militaire
Arch. exp. Path. Pharm.	Archiv für experimentelle Pathologie und Pharmakologie
Arch. Hyg.	Archiv für Hygiene
Arch. internal Med.	Archives of Internal Medicine
Arch. méd. exper.	Archives de médicine experimentale
Arch. mikr. Anat. Entwick.	Archiv für mikroskopische Anatomie (Entwicklungsgeschichte)
Arch. Pharm.	Archiv. des Pharmazie

Arch. sci. phys. nat.	Archives des sciences physiques et naturelles
Arch. Zool. Exper.	Archives für Zoologie Experimentelle
Arms and Expl.	Arms and Explosives
Atelier Phot.	Atelier des Photographen
Atti. Istit. Bot. Univ. Pavia	
Aust. P.	Austrian Patent
Aust-Hung. P.	Austria-Hungary Patent
Baugew. Z.	Baugewerks-Zeitung
Beibl.	Beiblätter zurd. Annalen der Physik
Belg. P.	Belgian Patent
Ber.	Berichte der Deutschen chemischen Gesellschaft
Ber. botan. Ges.	Berichte der Deutschen botanischen Gesellschaft
Ber. pharm.	Berichte der Deutschen pharmazeutischen Gesellschaft
Ber. physik. Ges.	Berichte der Deutschen physikalischen Gesellschaft
Ber. klin. Wochenschr.	Berliner klinische Wochenschrift
Berz. Jahrsb.	Berzelius Jahresberichte
Biochem. Centr.	Biochemische Centralblatt, Leipzig
Biochem. J.	Biochemical Journal, Liverpool
Biochem. Zts.	Biochemische Zeitschrift
Biol. Centr.	Biologische Centralblatt
Biophys. Centr.	Biophysikalische Centralblatt, Leipzig
B. M. and S. J.	Boston Medical and Surgical Journal
Boll. chim. farm.	Bolletino chimico farmaceutico, Milan
Bot. Centr.	Botanische Centralblatt
Bot. Gaz.	Botanical Gazette
Brewers J. Lon.	Brewers Journal, London
Brewers, J. N. Y.	Brewers Journal, New York
Brit. Food J.	British Food Journal
Brit. J. Dent. Sci.	British Journal of Dental Science
Brit. J. Almanac	British Journal Almanac
Brit. J. Phot.	British Journal of Photography.
Brit. Med. J.	British Medical Journal
Bull. Acad. Med.	Bulletin of the Academy of Medicine
Bull. Am. Pharm. Assoc.	Bulletin of the American Pharmaceutical Association
Bull. assoc. chim. sucr. dist.	Bulletin de l'association des chimistes de sucrerie et de distillerie de France
Bull. Hyg. Lab. U.S.P.H. and M. H. Serv.	Bulletins of the Hygienic Laboratory, United States Public Health and Marine Hospital Service
Bull. Mulh.	Bulletin de la société industrielle de Mulhouse
Bull. Musée	Bulletin du Musée de l'industrielle de Belgique
Bull. Pharm.	Bulletin of Pharmacy
Bull. Pharm. du Sud-Est.	Bulletin de Pharmacie du sud-est, Montpelier
Bull. Rouen	Bulletin de la société industrielle de Rouen
Bull. soc. chim.	Bulletin de la société chimique de France
Bull. soc. chim. Belg.	Bulletin de la société chimique de Belgique
Bull. soc. d'Encouragement	Bulletin de la société d'Encouragement
Bull. soc. de med. de Gand.	Bulletin de la société de médecine de Gand
Bull. soc. franç. phot.	Bulletin de la société française de photographie
Bull. soc. pharm. Bord.	Bulletin de la société de pharmacie de Bordeaux
Bull. soc. roy. pharm.	Bulletin de la société royale de pharmacie de Bruxelles
Bull. soc. scient. med. Rennes.	Bulletin de la société scientifique et médicale de l'ouest, Rennes
Bull. Zool. France	Bulletin Zoologic France
C. A. (Chem. Abst.)	Chemical Abstracts
Can. Drug.	Canadian Druggist
Can. P.	Canadian Patent
Can. Pharm. J.	Canadian Pharmaceutical Journal
Can. Pat. Off. Rec.	Canadian Patent Office Record
Caout. and Gutta-p.	Caoutchouc and la Gutta-percha
Cellule	La cellule
Cell. Ind.	Die Celluloid Industrie
Centr. Allgm. Path. u. path. Anat.	Centralblatt für allgemeine Pathologie und pathologische Anatomie

Centr. Bakt.	Centralblatt für Bakteriologie, Parasitenkunde und Infectionskrankheiten
Centr. Z.	Centralblatt für die Zuckerindustrie
Chamb. Comm. J.	Chamber of Commerce Journal
Chem. Centr.	Chemische Centralblatt
Chem. Drug.	Chemist and Druggist, London
Chem. Drug. Aus.	Chemist and Druggist of Australasia
Chem. Eng.	Chemical Engineer
Chem. Gaz.	The Chemical Gazette
Chem. Ind.	Chemische Industrie
C. N.	Chemical News
C. R.	Comptes rendus hebdomadaires de séances de l'academie des sciences
C. R. soc. Biol.	Comptes rendus hebdomadiares de séances de la Société de biologie
Chem. Repert.	Chemische-Technische Repertorium
Chem. Rev. Fett-Harz-Ind.	Chemische Revue über die Fett- und Harz-Industrie
Chem. Soc. Quart.	Chemical Society Quarterly
Chem. Tech.	Chemiker- und Techniker-Zeitung
Chem. Trade J.	Chemical Trade Journal and Chemical Engineer
Chem. Weekbl.	Chemisch Weekblad
Chem. Ztg.	Chemiker Zeitung
Chem. Zts.	Chemische Zeitschrift
Corresp. Zahn.	Correspondenzblatt für Zahnärzte
Crell. Ann.	Chemische Annalen für die Freunde der Naturlehre, etc.
Dent. Cos.	Dental Cosmos, Philadelphia
Deut. Arch. klin. Med.	Deutsches Archiv. für Klinische Medizin
Deut. med. Wochenschr.	Deutsches medizinische Wochenschrift
Ding. Poly.	Dinglers Polytechnische Journal
D.R.P.	German Patent
Drug. Circ.	Druggist's Circular
D. Buchdr. Ztg.	Deutsche Buchdrueker-Zeitung
Dyer, Calico Ptr.	Dyer, Calico Printer, Bleacher, Finisher, & Textile Review
Edin. Med. J.	Edinburgh Medical Journal
Eisen Ztg. (Eisen Z.)	Eisen Zeitung
Elec. Rev.	Electrical Review
Electr.	The Electrician
Elec. World.	Electrical World
Electrochem. Met. Ind.	Electrochemical and Metallurgical Industry
Elektrochem. Zts.	Elektrochemische Zeitschrift
Elektrot. Zts.	Electrotechnische Zeitschrift
Eng. Digest	Engineering Digest
Engng.	Engineering
Eng. News	Engineering News
Eng. Rec.	Engineering Record, Building Record and Sanitary Engineer
Engl. Mech.	English Mechanic
E.P.	English (British) Patent
Essig-Ind.	Deutsche Essigindustrie
Färb. Ztg.	Deutsche Färber-Zeitung
Fortschr. Chem.	Fortschritte der Chemie, Physik und Physikalischen Chemie
Fortschr. Med.	Fortschritte der Medizin
F.P.	French Patent
Freie K.	Freie Künste
Gaz. del Cliniche	Gazzetta della Cliniche
Gaz. chim. ital.	Gazzetta chimica italiana
Gaz. med. Ital. lomb.	Gazzetta medica italiana lombardia, Milano
Gaz. med. de Pav.	Gazzetta medica di Pavia
Gew. Bl. Schw.	Schweizerisches Gerwerbeblatt
Gew. Bl. Würt	Gewerbeblatt aus Württemberg
Gew. Ztg.	Wieck's Gewerbezeitung

Glasgow Med. J.	Glasgow Medical Journal
Graph. Beob.	Graphischer Beobachter
Graph. Mitt.	Schweizer graphische Mitteilungen
Gummi-Ztg.	Gummi-Zeitung
Hann. W. Bl.	Hannöversches Gewerbeblatt
Hide & Lea.	Hide and Leather
Hung. P.	Hungarian Patent
Hutm. Ztg.	Deutsche Hutmacher-Zeitung
Impr.	L'imprimerie
Ind. chim.	Industria chimica
Ind. Text.	L'industrie textile
Indg. Ztg.	Deutsche Industrie Zeitung
Inv.	The Inventor's Record.
Inv. nouv. chim.	Les inventions nouvelles, Arts chimiques
Iron Age	Iron Age
It.P.	Italian Patent
J.A.C.S.	Journal American Chemical Society
J. Agr. Sci.	Journal of Agricultural Science
Jahrb. Phot.	Jahrbuch für Photographie und Reproduktiontechnik
Jahresb.	Philipp Röder, Vienna
Jahresb. Chem.	Jahresbericht der Chemie
Jahresb. d. Pharm.	Jahresbericht der Pharmacie
Jahresb. Phot.	Jahresbericht der Photographie
Jahresb. rein Chem.	Jahresbericht der rein Chemie
Jahresb. ü. Tier-Chem.	Jahresbericht über die Fortschritte der Tier-Chemie
J. Am. Lea. Chem. Assoc.	Journal of the American Leather Chemists' Association
J. Am. Med. Assoc.	Journal of the American Medical Association
J. Analyt. Chem.	Journal of Analytical Chemistry
J. Appl. Micr.	Journal of Applied Microscopy
Jap.P.	Japanese Patent
J. Biol. C.	Journal of Biological Chemistry
J. Buchdr.	Journal für Buchdruckerkunst
J. Cam. Club	Journal of the Camera Club
J. Chem. Met. Soc. S. Af.	Journal of the Chemical, Metallurgical and Mining Society of South Africa
J.C.S.	Journal of the Chemical Society, London
J. chim. méd.	Journal de chimie médicale, de pharmacie et de toxicologie
J. chim. phys.	Journal de chimie, physique, electrochimie, thermochimie, radiochimie, mécanique chimie, stocchiométrie
J. de l'Anat.	Journal de l'anatomie et de la Physiologie normales et pathologiques de l'homme et des animaux
J. de Microgr.	Journal de micrographie
J. dist.	Journal de la distillerie française
J. Exper. Med.	Journal of Experimental Medicine
J. Frank. Inst.	Journal of the Franklin Institute
J. Gasbel.	Journal für Gasbeleuchtung und verwandte Beleuchtungsarten
J. Goldschm.	Journal der Goldschmiedekunst und verwandter Gewerbe
J. Ind. Eng. C. Chem.	Journal of Industrial and Engineering Chemistry
J. Infect. Dis.	Journal of Infectious Diseases
J. Med. Paris	Journal de médicine de Paris
J. Med. chim. pharm.	Journal de Chimie Medicale, de Pharmacie, et de Toxicologie
J. Med. Res.	Journal of Medical Research
J. Path. Bact.	The Journal of Pathology and Bacteriology
J. pharm.	Journal de pharmacie
J. pharm. chim.	Journal de pharmacie et de chimie
J. Phot.	Journal of Photography
J. Phot. Suppl.	Journal of Photographic Supplies
J. Phys. Chem.	The Journal of Physical Chemistry
J. Physiol.	The Journal of Physiology

J. prakt. Chem.	Journal für praktische Chemie
J.S.A.	Journal of the Royal Society of Arts
J. Russ. Phys. Chem. Soc.	Journal of the Russian Physical Chemical Society
J.S.C.I	Journal of the Society of Chemical Industry
J. Soc. Dyers Col.	Journal of the Society of Dyers and Colourists
J. suisse chim. pharm.	Journal suisse de chimie et pharmacie
J. U. S. Artil.	Journal of the United States Artillery
Kreutzer's Jahrsb. Phot.	Kreutzers' Jahresbericht Photographie
Lancet	The Lancet, London
Leather	Leather
Leath. Mfr.	Leather Manufacturer
Leath. Tr. Rev.	Leather Trades Review
Lederind.	Lederindustrie (Deutsche Gerwer-Zeitung)
Ledertech. Rund.	Ledertechnische Rundschau
Le Génie Civil	Le Génie Civil
Leipz. Färb. Ztg.	Leipziger Färber- und Zeugdrucker-Zeitung
Lond. Phot. Soc.	London Photographic Society
Lux.P.	Luxemburg Patent
Man. Build.	The Manufacturer and Builder
Maschinenb.	Der Maschinenbauer
Mat. grasses	Les Matières grasses
Med. naturw. Arch.	Medizinisch-naturwissenschaftliches Archiv.
Med. Times	The Medical Times, London
Med. Wschr.	Medizinische Wochenschrift
Med. Ztg. Russl.	Medicinische Zeitung Russlands
Mem. Manch. Lit. Phil. Soc.	Memoirs and Proceedings of the Manchester Literary and Philosophical Society
Merck's Rep.	Merck's Report
Metal Ind.	The Metal Industry
Met. Tech.	Metal Technik
Mex.P.	Mexican Patent
Midland Drug.	Midland Druggist and Pharmaceutical Review
Mitt. Centralst. f. Wiss.-Tech. Unters.	Mitteilungen Centralst. für Wissenschaftliche Technologische Untersuchungen
Mitt.Kgl.Materialprüfungsamt	Mitteilungen aus dem Königlichen Material prüfungsamt zu Gross Lichterfelde West
Mitt. Malerei	Technische Mitteilungen für Malerei
Mitth. Zool Sta. Neapel.	Mittheilungen aus der zoologischen Station zu Neapel, etc.
Monatsh.	Monatshefte für Chemie und verwandte Teile andere Wissenschaften
Monats. p. Dermatol.	Monatschfte für praktische Dermatologie
Mon. sci.	Moniteur scientifique
Mon. teint.	Moniteur de la teinture des apprêts et de l'impression des tissus
Mon. Text. Ind.	Leipziger Monatsschrift für Textil-Industrie
Montreal Pharm. J.	Montreal Pharmaceutical Journal
Mov. Pict. W.	Moving Picture World
Münch. med. Wochschr.	Münchener medizinische Wochenschrift
Must. Ztg.	Leipziger Färber Zeitung (Färberei Musterzeitung)
Nat.	Nature
Nat. Disp.	National Dispensatory
Nat. Drug.	National Druggist
Neurol. Centralb.	Neurologische Centralblatt
Nick.	The Nikelodeon
N. med. chir. Ztg.	Neue medicinisch-chirurgische Zeitung
N. O. M. and S. J.	New Orleans Medical and Surgical Journal
N. J. Pharm.	Neues Journal der Pharmacie für Aerzte, etc.
N. Y. Med. J.	New York Medical Journal
Oest. Chem. Ztg.	Oesterreichische Chemiker Zeitung
Off. Gaz. U. S. Pat. Off.	Official Gazette United States Patent Office
Oil Colour J.	Oil and Colourman's Trades Journal
Orgelb.	Die Orgelbauzeitung

Paper Making	Paper Making
Paper Mill	Paper Mill and Woodpulp News
Paper Tr. J.	Paper Trade Journal
Papier Ztg.	Papier Zeitung
Pharm. Centralh.	Pharmazeutische Centralhalle für Deutschland
Pharm. Era	Pharmaceutical Era
Pharm. J.	Pharmaceutical Journal and Pharmacist
Pharm. Post	Pharmazeutische Post
Pharm. Ztg.	Pharmazeutische Zeitung
Pharm. Ztg. Russl.	Pharmazeutische Zeitung Russlands
Pharm. Ztschr.	Pharmazeutische Zeitschrift
Phil. Mag.	Philosophical Magazine
Phot. Archiv.	Photographische Archiv.
Phot. C. Bl.	Photographische Centralblatt
Phot. Chronik	Photographische Chronik und allgemeine Photographen-Zeitung
Phot. Corr.	Photographische Correspondenz
Phot. Jour.	Wilhelm Horn's Photographische Journal
Phot. Mag.	Photographic Magazine
Phot. Mitth.	Photographische Mittheilungen
Phot. News	Photographic News
Phot. Rundsch.	Photographische Rundschau und Photographische Centralblatt
Phot. Wochenbl.	Photographische Wochenblatt
Phot. Zeit.	Deutsche Photographen-Zeitung
Phys. Rev.	Physical Review
Physik.-Chem. Centr.	Physikalisch-chemische Centrablatt
Physik. Zts.	Physikalische Zeitschrift
Poly. Not. Bl.	Polytechnische Notizblatte
Pogg. Beibl.	Poggendorffs Annalen der Physik und Chemie, Beiblätter
Pop. Sci. Mon.	Popular Science Monthly
Print. Reg.	Printers' Register
Proc. Am. Acad.	Proceedings of the American Academy of Arts and Sciences
Proc. Am. Micr. Soc.	Proceedings of the American Microscopical Society
Proc. Am. Pharm. Assoc.	Proceedings of the American Pharmaceutical Association
Proc. Am. Phil. Soc.	Proceedings of the American Philosophical Society
Proc. Am. Soc. Test. Mat.	Proceedings of the American Society for Testing Materials
Proc. Chem. Soc.	Proceedings of the Chemical Society
Proc. Manch. Lit. Phil. Soc.	Proceedings of the Manchester Literary and Philosophical Society
Proc. Roy. Soc. Edin.	Proceedings of the Royal Society of Edinburgh
Proc. Roy. Soc. Lon.	Proceedings of the Royal Society of London
Proc. Soc. Exp. Biol. Med.	Proceedings of the Society for Experimental Biology and Medicine
Publ. ind.	Publication industrielle des machines par Armengaud
Pulp Paper Mag. Can.	Pulp and Paper Magazine of Canada
Quar. J. C. Soc.	Quarterly Journal of the Chemical Society
Quar. J. Med.	Quarterly Journal of Medicine
Quar. J. Micr. Soc.	Quarterly Journal of the Microscopical Society
Queens Micr. Bull.	Queens Microscopical Bulletin
Rass. min.	Rassegna mineraria metallurgica e chimica
Rech. sur l'Hist. et le Dev. des Insectes	Recherche sur l'Histoire et le Developpement des Insectes
Rec. trav. Chim.	Recueil des travaux chimiques des Pays-Bas et de la Belgique
Reimann's Z.	Reimann's Färberzeitung
Rep. Chim. pure	Repertorium
Répert. pharm.	Répertoire de Pharmacie, Archives de pharmacie et Journal de chimie medicale réunis
Rep. H.M. Insp. Expl.	Report of His Majesty's Inspectors of Explosives

Rev. chim. ind.	Revue de chimie industrielle et La revue de physique et de chimie
Rev. gén. chim.	Revue générale de chimie pure et appliquées
Rev. gen. sci.	Revue générale des sciences pures et appliquées
Rev. gén. mat. color.	Revue générale de matières colorantes et de leurs applications aux textiles
Rev. Ind.	Revue industrielle
Rev. med. franc. et étrang.	Revue médicale française et étrangère
Revue phot.	Revue suisse de photographie
Revue tech.	La Revue technique
Revue Trav. Chim.	Revue Travaux Chimique
Revue J.	Revue Journal
Russ.P.	Russian Patent
Schuh Ind.	Schuh Industrie
Schweiz. Wochschr.	Schweizerische Wochenschrift für Chemie und Pharmazie
Sci. Abs.	Science Abstracts
Sci. Am.	Scientific American
Sci. Am. Suppl.	Scientific American Supplement
Sci.	Science
Seifenfabr.	Seifenfabrikant, Der
Shoe Lea. Repr.	Shoe and Leather Reporter
Snelling's Phot. J.	Snelling's Photographische Journal
Span.P.	Spanish Patent
Sprechsaal	Sprechsaal
Sprengst. Waffen Mun.	Sprengstoffe, Waffen und Munition
Swiss P.	Swiss Patent
Suddeut. Apoth. Ztg.	Suddeutsche Apotheker Zeitung
Tagb. Frankf. Naturf.	Tageblatt
Techniker	Deutsche Techniker Zeitung
Techn. Quart.	Technology Quarterly
Text. Am.	Textile American
Text. Col.	Textile Colorist
Text. Mfr.	Textile Manufacturer
Text. Rec.	Textile Recorder
Text. World Rec.	Textile World Record
Text. Färb. Ztg.	Textil und Färberei-Zeitung
Text. Ztg.	Textil Zeitung
Therap. Gaz.	The Therapeutic Gazette
Therap. Monats.	Therapeutische Montashefte
Tijdschr. nijv.	Tidjdschrift ter bevordering van nijverhed
Tischl. Ztg.	Deutsche Tischlerzeitung
Trans. Am. Electrochem. Soc.	Transactions of the American Electrochemical Society
Trans. Am. Micr. Soc.	Transactions of the American Microscopical Society
Trans. Roy. Soc. Lon.	Transactions of the Royal Society of London, Philosophical
Uhlands Trade Rep.	Uhland's Technische Rundschau
U. S. Disp.	United States Dispensatory
U. S. Nav. Inst. Proc.	United States Naval Institute Proceedings
U. S. Nav. Med. Bull.	United States Naval Medical Bulletin
U.S.P.	United States Patent
U.S.Ph.	United States Pharmacopoeia
Verh. v. Gew. Sitz. B.	Verhandlungen des Vereins zur Beförderung des Gewerbefleisses Sitzung Berichte
Viertelj. Schr. f. Zahn.	Vierteljahreschrift
Virchow's Arch. f. path. Anat. u. Hist.	Virchow's Archiv. für pathologie, Anatomie und Histologie
Wag. Jahrsb.	Wagner's Jahersbericht
West. Chem. Metal.	Western Chemist and Metallurgist
West. Drug.	Western Druggist
Wien. Mitt. Phot.	Wiener Mitteilungen (Photographischen Inhalts)
Wochbl. Papierfabr.	Wochenblatt der Papierfabriken

Wochsch. Brau.	Wochenschrift für Brauerei
Wollen Ztg.	Wollen Zeitung
World's Paper Trade Rev.	World's Paper Trade Review
Zahnheilk.	Journal für Zahnheilkunde
Zahntech.	Die Zahntechnische Reform
Z. anal. Chem.	Zeitschrift für analytische Chemie
Z. ang. Chem.	Zeitschrift für angewandte Chemie, und Zentralblatt für technische Chemie
Z. anor. Chem.	Zeitschrift für anorganische Chemie
Z. ehem. Apparat.	Zeitschrift für chemische Apparatenkunde (Discontinued)
Z. chem. Ind. Kolloide	Zeitschrift für Chemie und Industrie der Kolloide
Z. Dreschler	Zeitschrift für Dreschsler, Elfenbeingraveure und Holzbildhauer
Z. Färben-Ind.	Zeitschrift für Färben-Industrie
Z. Feuerwehr.	Illustrirte Zeitschrift für die deutsche Feuerwehr
Z. ges. Brauw.	Illustrirte Zeitschrift das gesammte Brauwesen
Z. ges. Schies-Sprengstoffw.	Zeitschrift für die gesamte Schiess-Sprengstoffwesen
Z. Klin. Med.	Zeitschrift für Klinische Medizin
Z. Nahr. Genuss. (Z. genuss).	Zeitschrift für Untersuchung der Nahrungs-und Genussmittel, sowie der Gebrauchsgegenstände
Z. pap.	
Z. physiol. Chem.	Zeitschrift für physiologische Chemie (Hoppe-Seylers)
Z. physik. C.	Zeitschrift für physikalische Chemie, Stöchiométrie und Verwandschaftslehre
Z. physik Chem. Unter.	Zeitschrift für den physikalischen und chemischen Unterricht
Z. Reprodukt.	Zeitschrift für Reproduktiontechnik
Z. Spiritusind.	Zeitschrift für Spiritusindustrie
Z. V. dt. Ing.	Zeitschrift des Vereins Deutscher Ingenieure
Z. Ver. Zuckerind.	Zeitschrift des Vereins der deutschen Zuckerindustrie
Z. wiss. Mikr.	Zeitschrift für wissenschaftliche Mikroscopie
Z. wiss. Phot.	Zeitschrift für wissenschaftliche Photographie
Z. wiss. Zool.	Zeitschrift für wissenschaftliche Zoologie
Z. U. N. G.	Zeitschrift für Untersuchung-der Nahrungs- und Genussmittel sowie der Gebrauchsgegenstände

NITROCELLULOSE INDUSTRY

CHAPTER XIV

CELLULOID AND THE PYROXYLIN PLASTICS

The manufacture of cellulose nitrate-camphor containing plastics is essentially an imitative industry, and is a forgery of many of the necessities and luxuries of civilized life. But unlike many forgeries, these plastics possess properties superior to those of the originals which they are intended to simulate. And the existence of the industry has, and its continuity does, depend upon how closely it can reproduce that which is beautiful and scarce, and hence much sought after and costly. Of all the industries in which the cellulose nitrates enter, not one has been brought to as high a degree of exact manipulation and mechanical perfection as in the manufacture of these plastics, of which celluloid is the most widely known representative. And notwithstanding the immense amount of continuous research involved, energy expended, and mechanical ingenuity displayed, the text-books and current literature have heretofore conveyed but little authentic information as to the details of the processes involved, so closely and assiduously have the laboratory and machine-room secrets been guarded. After the discovery of a cellulose nitrate, the simplest step in order to make a useful commercial product of it was dissolution in the most convenient solvent, which happened to be a mixture of alcohol and ether. Therefore the earliest known pyroxylin compounds were thin solutions made with liquid solvents, and were the subject of practical applications long before the solid compounds typified by celluloid—whose production awaited the discovery, development, and perfection of intricate methods and mechanical appliances —were possible. The extreme simplicity of the liquid solutions, whose manufacture merely involved dissolving pyroxylin to a sufficiently fluid condition bv ordinary means, permitted their early

being brought to a state of comparative perfection so far as method went, and although their manufacture became more extended from time to time, through the employment of the new liquid solvents discovered, the simple nature of the processes employed permitted their adoption whenever their properties were such as to be desirable in the compound.

Parkesine and Alexander Parkes. It has been stated that Parkes' interest in the cellulose nitrates was aroused from conversations with his friend, John Taylor, who, in 1846, took out a patent for Schönbein in England for the manufacture of guncotton.[1] Parkes, as with the other early investigators, had not gone far with his experiments before he realized that the extreme fluidity and thinness of the solutions which he was able to prepare was their serious drawback for use in many industries where otherwise they apparently would have an extensive field. His greatest drawback, of course, was the limited number of solvents at his command to work with —alcohol and ether being about all that gave promising results at that time. He found that increasing the solidity of the preparations by evaporating off the solvent was a slow and tedious operation, and one which, in those days, was accompanied with considerable danger. And even after the fluid portion had been eliminated, the solid cellulose nitrate left was in such a wrinkled and distorted condition as to be worthless for any very extensive application. He used a solution of pyroxylin of the usual photographic collodion strength—about 3–5 oz. per gal.—so that the reported remark of one of his associates that "from a barrel of mixture the guncotton you got you could hold in your hand" was not devoid of truth. When attempts were made to produce objects of pyroxylin of any size, weeks, and more often months, were required to eliminate the last traces of solvent. It is quite evident that Parkes was impressed with the possibilities which might result from the formation of solid compounds, and being both a chemist and engineer, he fitted up a laboratory at the works where he was employed[2] and in 1855 gave to the world the result of his labors in a patent.[3] Two more processes were protected the next year[4]

1. E.P. 11407, 1846.
2. Of Elkington, Mason & Co., Birmingham and South Wales.
3. E.P. 2359, 1855.
4. E.P. 1123, 1125, 1856. In these patents are directions for making a pasty mass by taking alcohol, ether and pyroxylin, which are then to be rolled between rolls. If this should be done, the only result would be a mass of powder, for upon evaporation of the solvents (alcohol and ether) nothing but a dry mass of pyroxylin would be left, without coherence or strength. Likewise Parkes directs to make sheets by pouring collodion upon glass, but when the fluid mass begins to dry, the rapid disappearance of the solvent would leave but a rumpled, cracked sheet of hard, brittle pyroxylin.

and others[1] at a later period. So much of his time was required by his employers that these patents made but little manufacturing headway until, urged by his friends, he prepared specimens and exhibited them at the Great Exhibition (London) in 1862, where he was awarded a prize medal for "his versatility of invention," although the specimens exhibited were all made by himself in a rough manner by hand. The examining committee of the French Exhibition of 1867 conferred upon him a silver medal, and suggested that Parkesine or Parkesite would be an appropriate name for this product.

As judged from his patents, some of which embody rather a series of suggestions of what he thought could be done, and not apparently an account of what he had done, Parkes had a very clear and rational conception of the possibilities which would result from the production of a suitable cellulose nitrate plastic.[2] In 1865[3] he lectured before the Society of Arts on the "Properties and Applications of Parkesine," in which he outlined the steps which led up to the preparation of his compound, and stated that the finished material could be produced "at a cost of less than 1 shilling per pound.[4]" The company formed

1. E.P. 2675, 1864; 1313, 2733, 3163, 1865; 1564, 1592, 2769, 1866; 865, 1695, 1867; 1366, 1614, 1868; 983, 1881; F. P. 71871, 1866. No U. S. Patents were granted to Parkes in this connection (see U.S.P. 257607, 1882), although J. Lewthwaite patented (U.S.P. 103209, 1870) a process for coating fabrics with "Parkesine or xyloinite," after Spill and Hyatt had been granted their first U.S. patents. Lewthwaite (E.P. 741, 1868), however, was previous to the Hyatts (E.P. 2101, 1870) in England, although it may be that E.P. 3651, 1868, D. Blake, was taken out for Hyatt.

2. In these later patents he produced a material which was to an extent successfully utilized, and into which camphor entered in the shape of spirits of camphor. Parkes was the pioneer in the recognition of the usefulness of camphor as an ingredient in pyroxylin mixtures. By adding large amounts of oils and resins to his compounds so as to have the requisite total solids upon evaporation to dryness, he forgot, or failed to observe, that the oils gave a weak and soft film, and a final product devoid of plasticity. In all the patents previously mentioned a fluid was first produced and from this fluid a solid mass subsequently obtained by driving off the volatile constituents.

3. J.S.A. 1865, No. 683, Dec. 15, p. 81.

4. His method of manufacture was to take 100 lb. of disintegrated or divided cotton waste, or similar substance, which was to be placed in an open vessel called a converter. Nitric and sulphuric acids were used in the proportion of one part nitric acid, sp.gr. 1.420, to from 4 to 5 parts sulphuric acid, sp.gr. 1.845, mixed in a separate vessel, and kept as cool as possible. The mixed acid was pumped or forced up into the converter, and the cotton, being put into a hopper placed over the converting vessel, fell into it through an opening at the top of the converter. By the time the cotton was charged into the converter—usually about ten minutes—the cotton was sufficiently changed chemically. At the longest time twenty or thirty minutes would not be exceeded. The pyroxylin, with the acid, was then allowed to fall through an opening in the bottom of the converter into a large box having a false bottom of perforated iron or wire gauze, six inches from the real bottom. On that the mixed cotton and acids were allowed to stand for one hour to allow the excess of acid to drain away. The cotton was freed from the remaining acid by being placed in a cylinder having a perforated bottom, and under a powerful hydraulic press. A hard cylinder of pyroxylin,

to exploit his inventions at one time had a considerable output, but on account of attempts on the part of the inventor to cheapen the product by bringing down the cost of the materials to within the sum which he stated to his financial backers was the normal cost, and due also to faulty and incomplete methods of seasoning, whereby large amounts of finished material were returned as unsaleable,[1] the cap-

containing only from 5 to 20% of acid, was thus obtained, and this was washed until neutral.

When the manufactured substance was required for future use it was placed in a machine (made for the purpose) to tear or disintegrate it into dust or small pieces. The divided cotton, on falling into a large box, was well washed again. The cotton was put into a cylinder with a perforated bottom, and the water was removed by hydraulic pressure, so that only from 5 to 20% of the water remained. The solid hard lump of cotton, now soluble, was broken up in the tearing machine, and, with the 5 to 20% of water, was dissolved in one or more of the following solvents: Vegetable naphtha (wood alcohol) (previously distilled off chloride of calcium, manganese, or zinc), nitro-benzol, aniline, camphor, alcohol, or glacial acetic acid, or mixtures of them, sufficient being used to make a soft plastic mass, which was afterward strained through wire sieves, under hydraulic pressure, to separate any solid impurities therefrom. The plastic mass was now, or before it was pressed, mixed with the oils, gums, or colors necessary to produce parkesine of any degree of hardness or flexibility, or of any color. Zinc chloride, cadmium iodide, zinc or manganese oxalate, and other agents were employed to prevent the rapid combustion of the nitro-cellulose. These were claimed in the first patent of 1855, and others were patented and made use of subsequently.

The preparation was then put into a rolling machine, closed to prevent the admission of air, and was heated by steam passing into the roller, and an exhausting apparatus was employed to return the solvents to vessels properly placed for their reception. In from twenty to thirty minutes the charge was sufficiently blended and stiffened to be taken out, and was then rolled by revolving cylinders into sheets of any length or thickness. Or, while in a plastic state, it was formed into tubes or other articles by dies or pressure. The whole of the operations, from the weighing of the one hundredweight of cotton to the finishing into sheets or otherwise, took only from two to five hours, according to circumstances.

A very important advantage claimed for this material is that it could be united by means of its own solvent or cement, and in its use there is no waste, as all the scraps may be reworked.

The points of interest and the advantages claimed by Parkes under his various patents are: "The production of solid masses of parkesine of all colors, and the use of certain substances to prevent the rapid combustion of pyroxylin;" "the employment of vegetable naphtha, or alcohol, distilled over chloride of calcium or zinc, and the recovery of solvents;" "the first use of camphor, alcohol, nitro-benzole, aldehyde, aniline, or glacial acetic acid, as solvents of pyroxylin, and of the gums used in the manufacture of parkesine;" "the use of glacial acetic acid, with gelatine tannic acid or gallic acid, and the solution of *wet* pyroxylin, thus saving all the time and risk of drying;" "the solidification of oils by the action of chloride of sulphur;" "the use of hydraulic machinery to expel acids and water, and also to strain the dissolved mass of parkesine;" "the production of figured and inlaid parkesine, and the imitation of ivory, pearl, tortoise shell, and other natural substances;" "the use of camphor to assist in rolling the sheets and working up other articles, and in various mechanical arrangements for the production of parkesine in a cheap and rapid manner;" "the use of iron vessels in making pyroxylin;" and "the application of the new material to the insulation of telegraph wires," etc. (Sci. Am.)

1. While at the Paris Exhibition this company was formed, and immediately established in London. Parkes threw all his energy and rights into the project, and took common stock with the other shareholders. It appears that Parkes had given too low costs of production, and in order to substantiate his previous cost estimates, he made the material within the price he claimed, but at the expense

italists who were backing Parkes withdrew financial aid, and the company, in 1867, was obliged to suspend operations, which were never resumed.[1]

Daniel Spill and Xylonite. It is stated that Spill was associated with Parkes in some of his work, and if so, no doubt saw opportunities which the latter had not taken advantage of to the greatest extent. In 1868, the year after Parkes was obliged to suspend operations, Spill was granted his first patent in England [2] for a pyroxylin combination in alcohol and ether and to which he gave the name " cotton xyloidine " or "xylonite," taking the name xyloidine from Bracconnet's term for nitrated starch. His process differed from that of Parkes in employing a smaller amount of total solvent and using castor oil to increase the amount of total solids and introduce plasticity into the finished product. But there was soon found a limit to which the ratio of castor oil and pyroxylin could be united without producing a soft and worthless film. Still a large amount of solvent was required, and although he patented and used acetaldehyde and availed himself of the anhydrous solvents described by Parkes, the general question of solvents lay at the bottom of the practical difficulties in manufacture. After the pyroxylin was dissolved, the problem still was how to get rid of the solvent so that the conversion of the dissolved material from a thin fluid into a semifluid state, or into a substance that would become hard could be accomplished in a quick, economical manner. The only method was evaporation. Spill gradually achieved success by his advances in solvents (see page 153),

of quality. In order to produce tons, where perhaps they should have been contented at first to make pounds, the finished product was sent out without complete elimination of solvents, and with but little regard for uniformity. It is stated that combs sent out in a few weeks became so wrinkled and contorted as to be useless. Parkes, however, laid down many of the fundamental principles of solvents which future workers used as a fulcrum upon which to build their success. His great error was in attempting to induce plasticity by adding large quantities of castor oil to the pyroxylin, in which he never could have succeeded.

1. In connection with the development of pyroxylin plastics in England, mention should be made of the following, who contributed to that advancement: P. Berard (E.P. 607, 1856), waterproofing wood by attaching a thin sheet of collodion to the wood by means of ether and pressure. W. Thistlewaite (E.P. 1159, 1856), prepared a picture transfer collodion by mixing ether 100, alcohol 25, gun cotton 3 and ammonium iodide 2 (parts). P. Berard (E.P. 1883, 1884, 1857) a process for manufacturing nitrocellulose. J. MacIntosh and G. Rhodes (E.P. 734, 1859), nitrated "sawdust of white pine" to produce waterproofing compositions. S. Barnwell and A. Rollason (E.P. 945, 1859; 2249, 1860) manufacture of nitrocellulose. M. Mennons (E.P. 2775, 1860) imitation hats and bonnets made of straw, chip, etc., are molded from a plastic composition formed of semifluid collodion, powdered cotton, and castor oil. M. Henry (E.P. 1454, 1860), manufacture of pyroxylin. M. Cartwright (E.P. 365, 1863), plastic composition of india-rubber and parkesine. These all antedated the work of D. Spill.

2. The Spill patents are U.S.P. 91377, 91378, 97454, 1869; 101175, 1870; E.P. 1816, 2666, 1867; 3984, 1868; 3102, 1869; 180, 787, 1017, 1626, 2649, 1870; 1739, 1875; F.P. 85369, 1869; 88898, 1870.

his last process being patented in 1875,[1] and two years later[2] the British Xylonite Company, Ltd., was incorporated, which took over the business of the previous firm of Daniel Spill & Co.[3]

Zylonite in the United States. Spill early extended protection of his processes to the United States by means of patents taken out in his name in 1869–70.[4] L. L. Brown, a business man of Adams, Mass., being aware of the apparent success of the Hyatt Bros. with their celluloid, opened negotiations with the English firm of Daniel Spill & Co., and acquired their right to exploit the Spill American patents. As Brown was not a technical man, it became necessary for him to associate himself with one, and as the Hoosac tunnel was in course of construction at that time and scarcely five miles distant, he secured the services of the chemist in charge of the blasting there, G. Mowbray. With technical equipment and abundant samples of material produced in England as a guide, a company was formed, and a small factory erected in Adams, Mass., in 1881–82. As he proposed to make a material similar to the English xylonite, he called it the American Zylonite Company.[5] The technical advances of this company are chronicled in the patented processes of Mowbray, J. Edson, who left the Celluloid Company in Albany and joined the Zylonite Company soon after their organization, R. Schüpphaus, and others. Partly as a result of litigation[6] this company became absorbed by the Celluloid Company in 1890, and thus passed out of existence.

1. E.P. 1739, 1875.
2. June 13, 1877, as stated in the Jubilee Brochure issued by the Company.
3. The Hamerton Mfg. Co. was established in 1877, and in 1879 was malagamated with and merged into the British Xylonite Co.
4. U.S.P. 91377, 91378, 97454, 1869; 101175, 1870; 97454 fairly represents the extent of information which the public or anyone else possesed at that time on the question of pyroxylin solvents. The discovery that camphor was a solvent of pyroxylin without the admixture of a liquid, although chemically important, was not practically available in the art by reason of the danger of explosion of the pyroxylin when the compound was heated to its melting point. His most important American patent is 101175, in which cotton or other vegetable fiber or lignine is reduced to a finely divided state; mixed with the aid of mechanical means in a vessel having revolving arms or beating bars, with a suitable quantity of acid; the acid strained from the fiber; the product pressed to remove excess of acid, and the pressed mass then opened out, washed, drained, and dried. The xyloidine is bleached directly after the removal of the acids and before removing it from the vat by means of any bleaching solution, making use of alternate stirrings and rest. It is dyed after draining and before pressing, by any fiber-dyeing process, either before or after the solution of the same in suitable solvents. For spreading upon fabrics 1 part of xyloidine is dissolved in from 5 to 12 parts of solvent, strained through a fine sieve under pressure, and spread on the fabric or surface in a semi-fluid condition. To reduce it to a nearly dry state the strained solution or paste is treated in a closed mixing vessel connected with an exhaust apparatus, the vessel being heated to about 100°. The solvent vapors that pass off are condensed for reuse.
5. American name pronounced "Zy'-low-nite," "Zy" as in "enzyme." English name pronounced zil'-o-nite, "il" as in "Spill."
6. Spill came personally to the United States and sued the Celluloid Co. for

Pyroxylin Plastic Development in Europe. The first pyroxylin plastic factory established on the European Continent was that of the "Compagnie Franco-Americane," who commenced the manufacture of celluloid under the Hyatt patents, in Stains, at St. Denis, in 1875. By an arrangement with this firm, the rubber-comb factory of Magnus & Co. took up the manufacture in Berlin for a short time, but discontinued, apparently on account of difficulties in the preparation and proper seasoning of the raw plastic. The continued harsh criticism of the plastic from competitors in other lines and the press as to the dangers in manufacture and inflammability of the material produced, undoubtedly did much toward deterring capital from investing in its preparation. But at the Paris Exposition of 1878 the exhibition of novelties produced from celluloid was so extensive and beautiful, showing that the field for disposal was practically limitless and as yet undeveloped, established confidence as to the soundness and perpetuity of the industry. The first celluloid factory established in Germany commenced operations in 1878 at Offenbach on the Main, and is in active operation at the present time under the name of Schreiner & Sievers. At a later period the firm of Dobler Bros. in Berlin followed, and for several years these two firms were most prominent in the manufacture of pyroxylin plastics in Germany. The first raw celluloid factory—as distinguished from smaller places which simply manipulated into ornaments the celluloid already produced—commenced production in 1880, when the Rheinischen Hartgummiwaarenfabrik in Mannheim, at that time managed by F. J. Bensinger, in a small but conservative manner, manufactured celluloid tubes, rods, and sheets. The nitrocellulose was dried instead of hydro-extracted and the water replaced by solvents, but owing to an explosion of one of the dry-houses in 1882, in which one man lost his life, the government explosives inspector forbade the manufacture of the product on the ground that he was opposed to unknown and hence uncontrollable forces. Bensinger then purchased nitrocellulose from French and other German concerns, and converted it into plastic by means of camphor. From these comparatively insignificant beginnings the industries have developed on the Continent to their present magnitude.

The largest pyroxylin plastic manufactory in Germany at the present time—the Gummi- u. Zelluloidfabrik zu Mannheim—profiting from previous experience, prepares nitrocellulose at Rheinau,

using a mixture of camphor and grain alcohol and won. Celluloid Co. then used camphor and wood alcohol, and Spill sued again. At the second trial it was proven that Parkes, and not Spill, was the first to describe the use of camphor with alcohols, hence second suit was lost to Spill and first decision appealed and reversed. (Spill vs. Celluloid Mfg. Co., 22 Blatchford C.C.R. 441).

where it is converted into plastic, and in a jellified condition is transported in air-tight cylinders to Neckarau, to be formed into the finished materials.

Development of Plastics in the United States.[1] Among the earliest inventions in the United States which contemplated the commercial applications of collodion other than photography and medicine, and in line with modern plastics, are the processes of G. W. Ray [2] in 1865 in his attempts to produce waterproof imitation linen collars and cuffs; J. A. Cutting of Boston, in his E.P. of 1854[3] and U.S.P. 31657, of 1861, in which he endeavored to obtain a suitable adhesive material for the glass sides of an aquarium; but especially to W. H. Pierson of New Orleans. He obtained the first U.S. patent[4] for "a plastic to be employed for manufacturing purposes generally," which covered about the same ground as Parkes, except that Pierson showed

1. For résumé of artificial plastics see F. Beltzer, Mon. Sci., 1908, (4), **22**, 529, 648; 1909, (4) **24**, 145, 262; see also Ding. Polyt., 1880, **235**, 203; 1881, **239**, 62; Wagner's Jahrsb., 1878, 1162; 1881, 949; M. Turin, Le Génie Civil, 1904, **44**, 152, 170, 190. For "History of Celluloid Industries" see Gum. Ztg., **14**, 845, and Klein, Z. ang. Chem., 1907, **20**, 610. For general artieles on celluloid and pyroxylin plastic manufaeture, see Hann. W. Bl., 1879, 779; Iron Age, 1879, **23**, No. 21; Gew. Bl. Schw., 1879, **4**, 160; Jour. Frank. Inst., 1879, **107**, 334; Papier Ztg., 1879, **4**, 254; Orgelb., 1880, **2**, 255; Ind. Ztg., 1880, **21**, 65; Techniker, 1880, **2**, 74, 102; Tisehl. Ztg., 1880, **7**, 71; Dingl. Poly., 1880, **235**, 203; Nature, 1880, **22**, 370; Gew. Ztg., 1880, **45**, 143; Man. Build., 1880, **12**, 7; Mon. Sci., 1880, **24**, 696; Papier Ztg., 1880, **5**, 195; Sci. Am., 1880, 3617; Hutm. Ztg., 1880, No. 13, p. 14; Wahl, Bull. Musee, 1880, **77**, 101; De Loas, Tijdsehr. nijv., 1880, **43**, 385; Sadtler, Inv., 1886, **1**, 570; J. Buchdr., 1887, **54**, 870; Eisen Ztg., 1887, **8**, 664; Z. Pap., 1887, **1**, 724; Iron Age, 1887, **39**, No. 2; Wahl, Jour. Frank. Inst., 1887, **108**, 402; Sadtler, Sei. Am., 1887, p. 69; v. **40**, 225; Chem. Ztg., 1887, **3**, 35; Engl. Mech., 1887, **29**, 154; Pol. Not. Bl., 1887, **34**, 249; Z. Bursten, 1891, **14**, 257; J.S.C.I., 1891, **10**, 571; Dréna, Inv. nouv. chim., 1892, 289; Z. Dreehsler, 1892, **15**, 206; Maschinenb., 1892, **27**, 14; Hogben, Gas Light, 1892, **57**, 77; Sehuh. Ind., 1896, **22**, 2; Gum. Ztg., 1896, p. 22; Voight, Z. V. dt. Ing., 1899, **43**, 524; Gum. Ztg., 1899, **13**, 620; Gewerb. Ztg., 1899, **64**, 283; Z. Bürsten, 1899, **19**, 25; Eiseng., 1899, **20**, 680; Bayr. Gew. Bl., 1899, 185; Gum. Ztg., 1899, **14**, 19; Gew. Bl. Würt., 1901, **53**, 299; Stubling, Celluloid, 1902, No. 2, p. 6; Andes, Chem. Ztg., 1902, **26**, 475; Margosches, Cell. Ind., 1903, p. 25; Whitehouse, Le Gén. Civ., 1903, **42**, 252; Andes, Chem. Ztg., 1903, **27**, 218; Margraf, Z. Dreehsler., 1905, **28**, 175; Dhommee, Rev. tech., 1905, **26**, 372; Celluloid, 1907, 8, 27; Stubling, Ibid., p. 107; Z. Bürsten, 1907, **26**, 557; Ibid., 1908, **27**, 355; Chem. Ztg., **3**, 35; Sci. Am., **40**, 225; Eng. Mechanic and World of Sci., **29**, 154; Polytech. Notizb., **34**, 249; Iron Age, **23**, 21; **24**, 26; Jour. Frank. Inst., **107**, 334; Papier Ztg., **4**, 254; For "Manufacture of Celluloid Accumulators," see Winkler, Crompton and Howell, Dingl. Poly., 1893, **290**, 277; Iron Age, 1887, **24**, No. 26. For preparation of the Ribbe accumulator (thin plates covered on both sides with perforated celluloid sheets), see El. Anz., 1898, **15**, 141. For manufacture of celluloid mud guards, see Ind. Rubber, 1897, **14**, 302.

2. U.S.P. 48239, 1865.

3. E.P. 1638, 1854.

4. U.S.P. 65267, 1867. His formula No. 1 consisted of plastic cotton 1, wet with alcohol and ether each 2 (all by weight), the mixture being applied to cotton batting or equivalent fiber, and allowed to solidify by drying. In formula No. 3 he rendered woven or other manufactured cloths waterproof by means of pyroxylin 1, ether 8, alcohol 8–24 parts (all by weight).

a clearer concept of the particular cellulose nitrates applicable for a definite purpose, and the factors of time, solvent, and heat necessary to produce a given result. Pierson, however, kept away from castor oil—the stumbling block of Parkes and Spill. He worked most industriously and intelligently on the problem, but to the serious detriment of his health, for his mind temporarily gave way, and after several years of sickness and slow recuperation, by the time he had sufficiently regained health to continue work, the problem had slipped from him and was in other hands.

Much work was being done along these lines in endeavors to make a successful dental plate without rubber, and all were apparently seeking to decrease the amount of solvent, usually by the use of castor oil. They all found the oil would come to the surface during evaporation and "fry out," and upon the continued heat necessary to evaporation of thin solutions, the oil was prone to turn rancid. So C. Seeley [1] said "Let us use a glucosé of low nitration, which cannot turn rancid and which gives a flexible compound." No one, however, cared to experiment with the explosive substance, although it certainly did impart great flexibility to the resultant film. J. Kendall and R. Trested [2] in their process for coating textile fabrics with pyroxylin laid down many generalizations which hold good to-day. J. McClelland [3] and L. Streeter,[4] both dentists and working independently, devised various modifications whereby the amount of solvent required per unit of pyroxylin finally obtained, was becoming less, their efforts being bent entirely on producing a satisfactory dental plate. Each inventor—inadvertently or otherwise—incorporated facts in their described processes which were taken advantage of by their contemporaries, and in this manner by the gradual accumulation of reliable data, the problem was nearing solution. So many seemed to fall

1. U.S.P. 79261, 1868; H. Lüttke patented (E.P. 24955, 1902) nitroglycerol for the same purpose.

2. U.S.P. 86841, 1869, the fabrics being intended as material for the manufacture of hats and bonnets. French zinc, or white lead, vegetable oil and collodion constituted the mixture.

3. U.S.P. 90765, 90766, 1869; E.P. 536, 1868, in which in endeavoring to make dental plates, he seeks to overcome the tendency to blister by the application of heat in the presence of low boiling-point solvents by the addition of castor oil, and in U.S.P. 76221, 77304, 1868 (Reissue 3777, 3778, 1869) he endeavors to supplant the castor oil used by the English by means of a vacuum. Whereas McClelland endeavored to get collodion to a hard, horny state by a vacuum, Hyatt succeeded in the opposite direction by great pressure. The dependence placed upon castor oil is clearly shown in Spill's U.S.P. 97454, in which he tries many new solvents, but does not reduce the amount of castor oil present. In U.S.P. 96132, 1869, McClelland first speaks of "plasticity" as a property of collodion. Also U.S.P. 105823, 1870; 143772, 1873; E.P. 86144, 86546, 1869.

4. U.S.P. 88228, 88260, 89253, 89254, 1869, in which little definite progress is made.

into the error of regarding castor oil as a solvent, and a desirable plastic agent working harmoniously with pyroxylin.

But meanwhile the elephant, who once roamed the forest and plains in great unmolested herds, was fast fading away before the hunter's rifle; the great stores of ivory left in the earth by a long line of ancestry were being rapidly removed; the tortoise turtles were being destroyed by that ruthless human enemy who coveted their wealth; Nature's provident stores of amber so lavishly formed by her cunning hand in the immense prehistoric forests of forgotten antiquity had been mined nearly to exhaustion; the polyps were unable to fast enough form their horny and calcareous secretion into coral in their silent workshops under the sea. Manufacturers, merchants, workmen, and the people were calling loudly for even greater supplies of these indispensable articles. The rubber trust was charging exorbitant prices to dentists for their rubber plates. A prominent New York billiard-ball firm [1] offered a substantial reward for a process of preparing a satisfactory substitute for ivory balls. The pyschological moment for the advent of celluloid apparently had arrived.

The Hyatt Brothers and Celluloid.[2] In 1863 John Wesley Hyatt, then a printer in Albany, N. Y., hearing of the prize of ten thousand dollars offered by Phelan & Collender for the patent rights of a process of manufacturing ivory billiard balls without the use of solid ivory, turned his attention to the solution of the problem. He tried the various gums, resins, and adhesives to be found in the literature at that time, as a result of which, although he was unable to produce a satisfactory billiard ball, he patented dominoes, checkers, chessmen, knife handles, and similar articles [3] which, in general, owed their merit to the combinations of pigments with resins, welded together by means of considerable pressure, and with sufficient heat to liquefy the resin at the time the pressure was applied. In common with other printers who handled type considerably, the tips of his fingers occasionally became abraded, and he

1. Phelan & Collender, of New York city.

2. From author's personal interviews with Mr. John W. Hyatt in 1910. For history of celluloid, manufacture see Hann, Wochenbl., 1879, 309; Wieck's Gewerb. Ztg., 1879, **44**, 237; Uhlands W., 1899 (1), **13**, 311.

3. Described in U.S.P. 31461, 1861; 35652, 1862; 50359, 1865; 76765, 1868; 88633, 88634, 89582, 91233, 91234, 91235, 1869. The pigments, gums, resins, oils, etc., introduced in pyroxylin solutions by the earlier inventors were in many cases no doubt used in the hope of making the compound more manageable. Thus, for instance, the early investigators started out with but ether-alcohol as a solvent, the collodions being painted upon fabrics or poured upon glass, the inevitable result being that the material upon drying became hard and brittle, the solid pyroxylin alone being left, which in itself was inelastic and unmoldable. Sheets formed by pouring the material upon glass, if of any material thickness, soon shriveled up, threw themselves from the glass and became valueless.

protected them by applying a little "liquid cuticle" [1] or collodion which was kept in the shop for that purpose, this being his first acquaintance with the cellulose nitrates. One day upon going to the cupboard where the vial of "cuticle" was always kept, he noticed that it had tipped over, the contents run out on the shelf and solidified, and on account of the volatile nature of the then known solvents, the dried film had pulled away from the wood, the film when detached from the adhering bottle forming a piece about the size of a thumb nail. It occurred to Hyatt that if a billiard ball could be enveloped with a film such as that, a distinct improvement would result. From this incident he turned his attention to experimenting with pyroxylin, this being in the latter part of 1868. At that time and until obliged to modify his U.S.P. 91341 of 1869, at the suggestion of his attorneys, Hyatt was unaware of the experiments of Parkes, Spill, or other investigators, or the fact of the use of camphor having been advocated as a pyroxylin solvent. His first successful experiments consisted in forming an inner ball of paper pulp pressed together by heat and adhesive agents, which was afterward coated by several immersions in an ether-alcohol pyroxylin solution. In his U.S.P. 89582 of 1869, an improved compound of ivory dust and other materials is claimed whereby the "ivory dust or other pulverized material is agglutinated by combining collodion therewith and subjecting the composition to pressure during the evaporation of the volatile elements by means of heat." [2] Great pressure and heat—the two factors prominent in his previous patents, are utilized in connection with pyroxylin, but the absence of camphor results in a non-moldable composition.

In 1869 he was joined by his brother, Isaiah Smith Hyatt, an editor of Rockford, Ill., and with the exact mental training required in newspaper work coupled with the mechanical genius and patience of the younger, J. Hyatt, a careful series of experiments was conducted with pyroxylin in combination with ivory dust and various pigments, and nearly always in conjunction with heat and pressure. In the course of these experiments they tried camphor as an adjunct

1. He commenced the manufacture of composition billiard balls with Osborn, Newcomb & Co. of Albany in 1863. In 1868, when experiments with pyroxylin-coated balls had given evidence of success, the Hyatt Manufacturing Co. was formed, which later was changed to the Albany Billiard Ball Co., the latter being in existence at the present time. The Newark, N. J., Sunday News, August 20, 1903, contains a five-column illustrated article on Celluloid written by Mr. J. H. Stevens. See also "The Celluloid Industries. Celluloid. Some Information Concerning its Manufacture." 84 pages, 12mo. Newark, N. J., 1885.

2. U.S.P. 91341, Hyatt, and U.S.P. 91377, Spill, were both granted June 15, 1869; "Celluloid" as a trade mark was registered in the U. S. Patent Office Jan. 14, 1873, as No. 1102, and again in 1883, and embraces every article manufactured by the Celluloid Co., even preparations of a liquid character.

to the pyroxylin. They were endeavoring to do away with the major portion of the solvent which formed such a stumbling block to the success of other workers. Whereas Spill, Parkes, and others used large quantities of castor oil to impart plasticity, Hyatt used none. On June 15, 1869, they were granted U.S.P. 91341, "its essential feature being the employment of a very small quantity of ether or other appropriate solvent, and dissolving pyroxylin therewith, under a heavy pressure, so that a comparatively hard and solid product is obtained, with great economy of solvents and saving of time." [1]

In U.S.P. 105338, 1870, is described the method of combining the camphor in finely comminuted condition with the pyroxylin, the corresponding English patent being 1603, 1869. In the two above-named U.S. patents are clearly outlined the method of formation of celluloid and the general principles of plastic manufacture upon which all subsequent processes have been based. Parkes first used camphor without apparently being fully aware of its value as a latent solvent, the frequently repeated statement in technical literature that the use of camphor in connection with pyroxylin is a discovery of Hyatt being therefore erroneous. What Hyatt did do was to discover the latent solvent action of camphor and to first prepare solid collodion directly and without the interposition of a large volume of solvents which had to be subsequently removed by evaporation. He substituted heat and pressure for the bulky solvent mixtures of his contemporaries, and achieved success by mechanical improvements rather than chemical discoveries.

Hyatt first used pyroxylin in the coating of billiard balls, and pyroxylin plastic (by this meaning pyroxylin in combination with camphor and with but a small amount of solvent) in the formation of dental plates in the early part of 1870, in which year the Albany Dental Plate Company was organized. Their first product was a mixture of powdered pyroxylin, finely divided camphor, and a pink

1. The method was to mix the ingredients thoroughly, then introduce into a cylinder and pour a small amount of solvent in, when the plunger or movable part of the mold was immediately forced against the contents by a pressure from 5-20 tons per square inch. The pressure was quickly applied so that the solvent would be forced into contact with every particle of the pyroxylin before the dissolving process had time to commence. The danger of explosion from the sudden and tremendous pressure exerted caused this method to be soon abandoned. See Hyatt's patents, E.P. 2510, 1869; 2101, 1870; 1025, 1871; 3101, 1872; 1025, 1875; 3715, 1877; 878, 1878; F.P. 90752, 1869. See British Jour. Dental Science, 1871, **14**, 364.

L. Dietz & B. Wayne (U.S.P. 133969, 1872) nitrated ramie fiber to produce a stronger pyroxylin. In the coating of billiard balls it was found that the heavy impact to which they were frequently subjected in normal use softened the pyroxylin covering, and they were attempting to overcome this. Nitrated ramie has greater strength and tenacity of film than nitrated cotton.

dyestuff (probably magenta), and when this was molded in a die with heat and heavy pressure, a pink dental plate of fairly good appearance resulted.[1] Although the dyestuff was soluble in alkaline media (the saliva) and the camphor taste was noticeable, the antagonism of the dental profession toward the rubber trust and their extortionate methods was so strong, that they eagerly tried this new rubber substitute and endeavored to *make* it succeed as a material for dental plates and clichés. Many industries linger for many years before becoming successful in their development, but the formative period had apparently passed before Hyatt's time, or at least was of very short duration, for in a period of two years the industry had grown to such magnitude that, considering the high initial cost of the powerful hydraulic presses and other machinery deemed necessary, it was considered advisable to admit capital and re-establish the business on broader lines. In 1872 the name was changed to the Celluloid Manufacturing Company, after I. S. Hyatt, the ex-editor, had named the material "celluloid," from cellulose and "oid" meaning "like." New York capitalists were interested, and they suggested that it would be advisable to establish the permanent factory near New York city, where they could more readily superintend the business. Newark was selected, ground purchased, and the erection of buildings commenced in 1873, although the factory was not productive until the following year. In 1890 the Celluloid Manufacturing Company and its allied interests were merged into The Celluloid Company, at present capitalized at six million dollars.

In the number and extent of inventions, John W. Hyatt was much more productive than his brother, and is often spoken of as "The"

1. The exorbitant prices charged for rubber plates caused acute tension between the dentists of the land and the rubber manufacturers, and the former welcomed and tested gladly any product that appeared to offer relief from the use of vulcanized rubber. No doubt attempts of the dentists of the country to shake off the rubber trust spurred on investigators and in this manner contributed in no small measure to the success of the early days of celluloid.

In U.S.P. 105338, the Hyatts abandoned all liquid solvents, and started at the solid end of the problem, being in this respect just the opposite from the English inventors. Being practical men and realizing the cost and disadvantages of the large bulk of liquids, and having no preconceived ideas from familiarity with the literature of the subject, the mechanical experience of J. W. Hyatt was brought into use and this led to the discovery that camphor at its melting point under pressure is a direct and energetic cellulose nitrate solvent. While camphor melts at 175° it liquefies considerably under this temperature when subjected to great pressure. The Hyatts made pressure do what others tried to accomplish with solvents, and their success lay in keeping the ratio of solvent to pyroxylin low. Whereas others dissolved pyroxylin in solvents, Hyatts did the reverse and dissolved the solvents (camphor and alcohol) in pyroxylin.

For development of the pyroxylin plastic industry in Italy, see V. Ravizza, L'Industria Chimica, 1908, **7**, 25-32, where an estimate of the first cost and maintenance expense is given for a plant having a capacity of 800 k. of celluloid per day. For Japanese celluloid industry, see Chamber of Comm. Jour., Sep., 1910.

Hyatt. On November 19, 1872, the Hyatt Bros. filed their U.S.P. 133229, which outlined definite and exact methods of procedure for the various steps of manufacture—claims sufficiently broad to apparently withstand subsequent litigation.

Pasbosene, Cellonite, and Pyralin.[1] About 1878 Joseph R. France started his work on nitrocellulose at Plainfield, N. J., although his first pyroxylin patent[2] was not granted until ten years later. In 1881 C. O. Kanouse[3] assigned to Albert Thalheimer[4] of Newark, a process for the "manufacture of plastic compounds from soluble fiber," in which no mention of camphor or other plastic-producing material is stated.[5] Thalheimer associated himself with J. W. Hayes, at that time a letter carrier, to work the Kanouse patent, under the name "The Merchant's Manufacturing Company" and the plastic was called "Pasbosene," of obscure derivation. Pasbosene was first produced in 1881 at Newark, N. J. Two years later, this company united with France and his Plainfield interests in the formation of the "Cellonite Company," the name of the material being changed to "Cellonite." Under the technical leadership of France, progress was rapid and consistent, and in 1885 the factory was removed to Arlington, N. J., changed to the "Arlington Manufacturing Company"[6] and the product again to "Pyralin,"[7] since which time it has been in active existence. Pyralin, then, is a pyroxylin plastic analogous to celluloid, xylonite and zylonite.

The Hyatt Pyroxylin Plastic Process. The nitrated tissue paper (prepared as described in Chapter III) after neutralization, is first ground in water until reduced to a fine pulp, by means of a machine similar to that used in the grinding of paper pulp. Any pigment, lake, or dyestuff that is to be incorporated is then mixed or ground with the still wet pulp, or stirred in. Finely pulverized

1. For information in this topic and elsewhere, the author is indebted to Dr. Jasper E. Crane, present chemist of the Arlington Company.
2. U.S.P. 392794, 1888.
3. U.S.P. 274734, 1881.
4. Not the Albert Thalheimer of Reading, Pa.
5. Strictly speaking, the patent description of Kanouse did not result in the production of a plastic mass, camphor being absent. However, as has been decided in the United States Supreme Court, and is stated elsewhere herein, the basal camphor patent dates back to A. Parkes, E.P. 1313, 1865. This was established by litigation between the American Zylonite Company, and the Celluloid Company, in which the former obtained judgment on the ground that Spill's U.S.P. 94454, 1869, was the first mention of camphor in connection with pyroxylin. However, in an appeal which resulted in a reversal, it was shown that Parkes, not Spill, had prior claim to this point, and hence the use of camphor with pyroxylin was thrown open to anyone in the United States. Kanouse apparently took advantage of this fact.
6. Later and at present "The Arlington Company," H. S. Chapman, its present President, was associated with France in his earliest experiments at Plainfield.
7. Derived from "pyroxylin."

camphor[1] is then mixed with the ground pulp in the proportion of 1 part camphor (by weight) to 2 parts pyroxylin in the dry state, the proportion of which may be somewhat varied, still with good result. In the original Hyatt process the camphor was actually ground in the moist pulp in order to obtain a most intimate union;[2] the mass being allowed to stand for several hours and protected from the air, for complete dissemination of the camphor to take place. The compound thus prepared is placed in a hydraulic press and subjected to great pressure, resulting in the formation of cakes preferably about 12 in. diameter and $\frac{1}{4}$ to $\frac{1}{2}$ in. in thickness, it being impracticable to attempt to absorb moisture from a cake of much greater thickness. The cakes are then laid in a pile with a sheet of blotting paper between each,[3] the whole being subjected to hydraulic or other pressure, the sets of blotters being changed several times after successive presses. During this process the compound is protected from the air, thus

1. Hyatt preferred to comminute the camphor by making a saturated solution in ethyl alcohol and precipitate it in an impalpable form by means of a large volume of water, the idea being to bring the pyroxylin and camphor to the finest state of subdivision, that the converting action may be induced under the most favorable circumstances. Other methods of pulverizing camphor are grinding with a small amount (2–3%) alcohol, when the camphor becomes a friable mass easily reduced to powder. Rolling with a small amount of magnesium oxide or carbonate is said to be a quick and efficient method of treating large quantities. The ease with which camphor pulverizes depends in a large measure upon its freedom from camphor oil, the presence of the latter increasing the difficulty of powdering.

2. As explained by the Hyatts in U.S.P. 156352, 1874, they found that the heat of a pair of rolls of about 50–85° was about as high as it was practicable to carry the heat. Spill used an active solvent and hence obtained a dough-like mass which was not plastic. Hyatt took camphor alone as the latent solvent, but the temperature required to obtain the solvent action was so high as to make the process a very dangerous one. In order to obtain the full value of the solvent action he took 8 lb. alcohol and 1 lb. camphor and diffused it thoroughly through a cellulose nitrate which was not readily attacked by this mixture. He then brought out the dormant and restrained solvent action afterward by pressure, mastication, and hydraulic pressing. This enabled him to control the amount of solvent used, and to gradually reduce it to the lowest economical basis. In U.S.P. 156353, 1874, he realized that only enough alcohol was needed to dissolve the combined camphor and pyroxylin. One lb. paper pyroxylin is a bulky mass and requires 7-8 lb. alcohol to wet it thoroughly. But by grinding the wet camphor and pyroxylin together, the bulk was reduced many times, so that 1 lb. alcohol would effectually wet 1 lb. pyroxylin. In this manner, therefore, the bulk of solvent was reduced to a point just sufficient to dissolve the mass only upon the application of heat and great pressure, thus utilizing the two desirable properties—the camphor for plasticity and the alcohol for easy manipulation—to their greatest extent. He made pressure do what others tried to do with a large bulk of solvent, and he succeeded because he ground the ingredients together to an impalpable powder, and therefore operated upon a bulk very small in comparison with that of others. In this connection see J. Stevens, U.S.P. 269343, 1882; J. Hyatt, U.S.P. 246678, 1881.

3. McClelland patented a method of pressing out solvent from pyroxylin by means of absorbent pads. When Hyatt's U.S.P. 133229 appeared, McClelland instituted suit for infringement of patent. Hyatt, however, showed to the satisfaction of the court that he had so little solvent present that he pressed out and therefore there was absorbed by the pads only water and not solvent, and on this point McClelland's suit was thrown out. See J. Hyatt, J. Stevens, W. Wood, U.S.P. 296970, 1884, in this connection.

preventing the evaporation of the camphor and also all liability of ignition of the material. When dried the material is then ready for conversion into celluloid.[1]

This is accomplished by placing the mixture in a mold of any size or form, which is heated by steam or by any convenient method to 80–150°, depending on the size of the mass and proportion of camphor, and at the same time subjecting to heavy pressure. The heat, according to the degree used, vaporizes or liquefies the camphor, and thus converts the latent into an active pyroxylin solvent. By this combination of heat and pressure, every particle of pyroxylin comes in contact with a particle of solid camphor or is permeated by its vapor, the result being the formation of a homogeneous body, which gradually hardens after cooling and as the camphor evaporates. Before the camphor becomes evaporated, the material is readily moldable by heat, and upon solidifying "neither changes nor appreciably shrinks."

The Manufacture of Pyroxylin Plastics.[2] Of the several meritorious methods known[3] for the preparation of pyroxylin plastics, all are now produced by what is known as the "wet process," i.e., with the addition of solvents in order to lower the temperature of conversion of pyroxylin into plastic by camphor or analogously acting body. The classifications based upon wet and dry processes and described in various works are now obsolete, due to the fact that the

1. The first mention of celluloid occurs in U.S.P. 133229, 1872. In this and U.S.P. 91341, 1869; 105338, 1870, and E.P. 1603, 1869, the process of plastic formation without liquid solvents is clearly described. Subsequently a small amount of spirits of turpentine or alcohol was used with the camphor to reduce the melting point of the latter, in order that conversion might take place at a lower temperature. When it is remembered that the melting point of camphor (175°) is above the decomposition point of cellulose nitrate, the desire to lower the conversion point of the former is evident. Another point is that discoloration at 175° of the whole mass was prone to occur from incipient decomposition, and this could be remedied only by a reduction of "solvent temperature."

2. There is a wide distinction between the manufacture of "pyroxylin plastics" and "pyroxylin plastic goods"; the former can only be carried on in a large manner and calls for the investment of large sums of money for mechanical equipment, and is carried on profitably only when the output is considerable. The manufacture of pyroxylin plastic goods, on the other hand, calls for the use of comparatively inexpensive mechanical appliances, and is carried out by a large number of different firms in a small way. A great deal of "raw" plastic is worked up by hand in molds simply plunged into hot water for shaping the various plastic forms. While the working up of celluloid sheets into ornaments is often carried on in the house by piece-work. For "Precautionary Measures in Working Celluloid," see Ztg. Feuerwehr., 1898, **27**, 17. For "Precautions Observed in a French Celluloid Works," see Fabriks-Feuerwehr., 1908, **15**, 26.

3. For the process of Gillet (camphor 50–80 k. in alcohol, adding 20–50k., colophony and proceeding in the regular way) see F.P. 352853, 1905. The compound of H. Goetter (U.S.P. 597144, 1898) composed of nitrocellulose 96, wood alcohol, 80, and amyl acetate 28 (all parts by weight) is claimed to be elastic, but not plastic.

original dry process of Hyatt, in which the camphor and pyroxylin were converted by heat and pressure alone and without the interposition of a temperature-reducing fluid, is now no longer used on account of the danger of discoloration and decomposition of pyroxylin at the high temperature required to liquefy the camphor and thus exert its solvent action, the dangers attendant upon exposure of the nitrocellulose to elevated temperatures, and the fact that there were no compensatory advantages to counterbalance the disadvantages just stated.[1]

The wet process is rationally divided into (*a*) addition of alcoholic solution of camphor to the pyroxylin, and after allowing the pyroxylin alcohol and camphor to stand together for a number of hours, mastication under heated rolls with pressure, and (*b*), the process used almost exclusively in the United States and to be described in detail, wherein the moist pyroxylin and camphor are first ground together into intimate juxtaposition, then the alcohol added by sprinkling, and after several hours allowed to elapse for thorough penetration of the fluid into the mass, plasticity is given by heat and pressure, welding the mass into a homogeneous body. Where the processes involve the use of considerable amounts of fluids with pyroxylin and camphor, while requiring the expenditure of less capital for power, equipment and maintenance, possesses more than the counterbalancing disadvantage of the unavoidable loss of solvent due to evaporation, even with the most modern methods of refrigeration and recovery. While the purely mechanical methods have the undisputable drawback of requiring large initial cash outlay, this is the only point in its disfavor.

The manufacture of modern pyroxylin plastics may be described as comprised in the following distinct stages:

1. Nitration of the cellulose (paper) as described in Chapter III.
2. Bleaching of the nitrated fiber.
3. Pulping or reducing the pyroxylin to fine powder.

1. Attention is drawn to the fact that whereas in the usual development of an industry, the first methods and machinery are gradually replaced by others more productive or inexpensive, until often in a few years the industry has been so completely revolutionized in its methods and commercial demands that the original devices and manipulations are discarded as obsolete. Pyroxylin plastic manufacture forms a notable exception to this apparently well-established experience, for the devices and refinements patented by Hyatt and others many years ago, stand to-day with but unimportant refinements the best examples of plastic practice, and are used in essentially their originally described form. For this reason it must not be inferred because a patented process of perhaps thirty years' standing is described in full herewith, that more efficient and modern methods have supplanted it. The methods and manipulations of pyroxylin plastic manufacture as used at the present time are developments of a decade of more ago, and the reason so little authentic in the way of information is obtainable in the literature is due to the zealousness with which these methods have been guarded in their important manipulative details.

4. Introduction of pigment, lake or dyestuff.
5. Preparation of the camphor or its substitutes.
6. Mixing the camphor, pyroxylin, and solvent.
7. Introduction of stabilizing agents for transparencies.
8. Dehydration of pyroxylin and camphor pulp.
9. Recovery of solvent.
10. Conversion of pyroxylin into plastic by heat and pressure.
11. Preliminary seasoning by pressure.
12. Formation of crude plastic into tubes, rings, rods, slabs, sheets, and other rough forms.
13. Seasoning or elimination of solvent.
14. Cutting, molding, ornamenting, printing, and preparation of finished articles.
15. Utilization of waste.

Bleaching of the Nitrated Paper is resorted to only for pyroxylin intended for use in transparent sheets where the maximum freedom from color is desired. Although bleached tissue paper is used as the form of cellulose to be nitrated, it has been found that a whiter final product is obtainable where a light bleaching is given the nitrated paper before neutralizing. The two methods used are bleaching by chlorine as first described by D. Spill, and decolorizing by means of acid permanganate as practiced by Hyatt.

In Spill's method the paper after nitration is given a slight wash to eliminate the bulk of nitrating acids, then placed in a cold solution of bleaching powder of 2° Twaddle strength (sp.gr. 1.01) where it is allowed to remain for from fifteen minutes to two hours with occasional stirring, and until a sample taken out and washed when held between the eye and strong daylight appears uniformly white and translucent. The excess of bleaching solution is then removed by a centrifuge, and the nitropaper washed in the usual manner until the desired stability tests are obtained. It has been stated that the use of warm or stronger bleaching-powder solutions is apt to result in the formation of chlorine substitution products, difficultly removable by poaching and washing, and which, when present, are prone to induce decomposition of the cellulose nitrate. The neutralized pyroxylin should show no traces of chlorides, when an acetone solution is mixed with a solution of silver acetate in ethyl alcohol.

The potassium permanganate method of bleaching has the advantage of being milder in action and more easily controlled. The paper fresh from the nitrating bath is several times washed to eliminate all but traces of free nitric acid, and plunged into a 1% solution of potassium

permanganate, the pyroxylin taking on a light-brown color from reduction of the permanganate. After agitating in the cold solution for a short time, steam heat is applied until a temperature of 40–50° is reached, when dilute (10%) oil of vitriol is cautiously run in, still with continuous stirring, and until about 5% (calculated on the weight of the pyroxylin) has been added. After the acid has thoroughly permeated the contents of the tank, oxalic acid in aqueous solution is run in until the brown color of the pyroxylin just begins to lighten. By continued agitation the color gradually lightens until all the manganese dioxide has been oxidized, as shown by the appearance of a colorless solution again. If the solution does not become entirely colorless a second addition of oxalic acid is required. The nitrated paper is finally removed, washed free from acids and stabilized in the usual manner.[1]

It is claimed that paper or cotton bleached after nitration is more readily washed free from acids, more easily soluble in the usual solvents, and gives in addition to a more nearly colorless solution, one which will filter more readily and may be exposed to sunlight for a great length of time without assuming a yellowish tint. The use of sodium peroxide, hydrogen dioxide, or sodium perborate has not given as uniform or satisfactory results as the two methods described above.

Pulping or Beating the Pyroxylin is carried on in a similar manner to that described in Chapter III, the beating being continued until the paper has reached a state of subdivision so fine that the mass has lost all structural identity to the naked eye, appearing as a pulp. It is important that this subdivision of the paper be very thorough and complete in order to be assured of a uniform union of pyroxylin and camphor in the subsequent converting process. The fineness can be quite accurately determined by drying a small sample and blowing it over the surface of a black glass plate, any insufficiently disintegrated particles showing conspicuously upon the dark polished background.

Introduction of Coloring Matter. Those basic or acid dye-stuffs are employed which, when pure, readily dissolve in methyl or ethyl alcohol with practically no residue. Where the camphor is mixed with the pyroxylin by first dissolving the former in alcohol, the dye-stuff may be added in alcoholic solution at the same time with the

1. According to J.S.C.I., 1891, **10**, 571, to the washed nitrocellulose is added three times its volume of water, containing 2% potassium permanganate, and then left for an hour in the cold. The unchanged permanganate is then washed out and a strong brine containing HCl is added. This mixture is allowed to act on the nitrocellulose until the latter has changed from a light brown or yellow to white, when all acid is removed by washing in the usual manner.

alcoholic camphor solution. In the more usual method of grinding the camphor and moist pyroxylin together before adding alcohol, the dyestuffs are still dissolved in a small amount of spirit, paper-filtered from any salt, dextrin added as adulterant, or other insoluble residue, and this sprinkled over the pyroxylin-camphor mass in the converting box. It is especially important in producing transparent effects, and in those translucent articles as imitation tortoise shell, where the opacity is due to dyestuff and not to pigment, that all dyestuffs should be paper filtered before use, in order to eliminate the possibility of introducing undissolved particles.

With lakes, the major portion is insoluble in alcohols, pigments being entirely so. Two principal methods of introduction have been advocated and are practiced, which have advantages and disadvantages as follows: Where the pigment—usually zinc or magnesium oxide or carbonate—is added to the pyroxylin where the latter and camphor are to be mixed without the addition of solvent, the three are ground together, the pigment imparting greater stability due to its presence, but hydraulic pressure dehydration is not as complete in the removal of water on account of the large bulk of interfering pigment which retains moisture. On the other hand if the pigment is not introduced and ground with the other materials before removal of the water, it is more difficult to homogeneously incorporate the pigment, the absence of which as a stabilizer may induce incipient decomposition and discoloration on application of the enormous and sustained pressure.

The customary practice appears to be first to dehydrate the pyroxylin in contact with the camphor or camphor substitute, then break up the cakes and add the pigments finely ground, mixing pigment pyroxylin and camphor together as thoroughly as possible, after which the alcohol is added to start conversion. Any soluble stabilizer introduced goes into the mass with the alcohol.

Preparation of the Camphor or its substitutes for incorporation with the finely divided pyroxylin was formerly done by precipitating an alcoholic camphor solution with water, filtering off the finely divided camphor and adding this in a moist state to moist pyroxylin, where, after thorough admixture, the excess of water was partially removed by pressure between pads of blotting paper. It was found, however, that if the natural camphor was finely ground with the pyroxylin no previous division was necessary. If the camphor is to be added in solution, the desired amount is weighed off and dissolved in the required volume of methyl or ethyl alcohol (grain alcohol denatured with ether being used in the United States at present for this purpose),[1]

1. See Chapter XXI.

the whole being placed in a tank tightly covered and fitted with a stir, ring device, the mass being agitated until complete solution has taken place. If it is desired to clarify the camphor from the pieces of bark, bits of wood, and other solid particles usually present, the outlet cock to the mixing tank may be provided with a cheesecloth or moleskin-cloth filter to intercept the specks. Clarification of a camphor solution by long standing is unsatisfactory on account of the bark and wood refusing to subside. When transparent sheets are to be produced, irrespective of the method used to combine the camphor and pyroxylin, it is often advisable to clarify the camphor by solution and filtration, for where the sheets are to be cut into strips for continuous photographic films, any specks would appear prominent upon projecting the magnified film upon the screen. The camphor from a filtered ethyl alcoholic solution may be readily recovered in the solid state by distilling off the solvent in a partial vacuum. The camphor substitutes which have stood the test of time have been bodies sufficiently soluble in alcohol to admit of their use by dissolving in the small amount of alcohol required to lower the temperature of conversion.

Mixing Pyroxylin and Camphor is usually done by a very thorough grinding of the moist pyroxylin with camphor, which may or may not have been previously reduced to fine powder. The grinding is continued for several hours and until the damp mass feels entirely smooth, when a small amount is rubbed between the thumb and forefinger. In order to retain as much camphor as possible, the grinding mills are kept covered, and should contain just sufficient moisture to admit of thorough mixing without clogging.[1] The presence of pigment as zinc oxide or carbonate materially reduces the time

1. The grinding must be sufficiently intimate so that each particle of pyroxylin lies next to one or more particles of camphor, and upon the application of heat the conversion of the mixture into a solid compound the pyroxylin will be affected by the camphor before a sufficiently high temperature has been reached to start decomposition. The presence of camphor as a solvent retards or prevents decomposition, which would usually occur at the elevated temperature to which the nitropaper is subjected, especially if that heat be prolonged for a considerable period. It is therefore advisable that the mixture of pyroxylin and camphor shall be as intimate as possible. Another effect of lack of intimate mixing in a finely powdered condition is that some of the pyroxylin may be left untouched or uninfluenced by the solvent action of the camphor, the latter flowing very slowly under the effect of the degree of heat applied in the converting processes and will not penetrate the pyroxylin particles if they exceed a certain size. The pyroxylin might be in a very fine condition, and yet be unacted upon by the camphor, due to the agglutination of the former together until a small mass sufficiently large or compact to prevent conversion of the interior is formed. The usual ball mills are unsuitable for grinding camphor and pyroxylin, although so valuable in other respects, being equal to the action of many hundred mortars grinding at the same time. It has been found that when pyroxylin pulp and camphor are placed in these mills no grinding action takes place, the pulp and especially the camphor being of that unctuous, yielding nature which apparently prevents the balls from exerting their usual comminuting action.

required for adequate grinding, the inorganic particles apparently acting as cutting edges, especially for the softer camphor.

In making pyroxylin compounds it is very difficult to combine the pyroxylin with active solvents, unless the proportions of such solvents are largely in excess of the amount of pyroxylin used. The reason for this is that the pyroxylin absorbs the solvent so readily that whenever the two come together the greater portion of the solvent is taken up at the first point touched. In a mass of pyroxylin any part which comes in contact with the solvent will first absorb several times its own weight before it permits any of the liquid to seek other parts of the mass. As it is not only unnecessary, but positively objectionable, to use so large a proportion of solvent, as the pyroxylin naturally absorbs, the importance of methods by means of which the proportions can be regulated at will has long been recognized by those skilled in this art.

Although it is impossible, under ordinary conditions, to penetrate a large mass of dry pyroxylin with a small quantity of active solvent, still it has been found that the pyroxylin possesses the power, to a very limited extent, of absorbing the solvent from those portions of the mass already saturated. J. Hyatt [1] has made use of this limited penetrative power of active solvents in the following process: The pyroxylin, while in a dampened condition, is cut into a flock, preferably by the machine illustrated and described in U.S.P. 246678, 1881, having found that pulp made in this manner is more suitable for making pyroxylin paper than that ground in an ordinary paper-engine. In order to grind the paper in this machine, it must contain no more moisture than is necessary to render it non-inflammable —say from 6–8 parts of water to each 10 parts pyroxylin. After the pulp is formed it is mixed with the water and made into paper by means of the cylinder paper-making machine shown in Fig. 149. From the two making cylinders *aa'* and the couching rolls *bb'*, the paper is taken by the endless felt *c* to the first press rolls *dd'*, where it is pressed between the felts *c* and *e*. The paper passes through the machine as shown, two finely perforated tubes *BB'* being arranged so as to sprinkle spirits of camphor upon both sides of the paper as it passes from the drying cylinders into the box *C*. The pump *A* supplies the solvent in measured quantities from the tank *F*. This process, of course, requires that the sheets made from the pyroxylin pulp be of a thickness proportioned to the amount of liquid solvent to be applied. When the sheets are much thicker than 0.03 in., they refuse to absorb the solvent, and when they are made too thin they

1. U.S.P. 331713, 1885.

absorb it too readily, some parts taking more than the necessary supply. According to the experience of Hyatt, a mixture by weight, of pyroxylin 100, alcohol 40, and camphor 40, is sufficient to accomplish this result, the pyroxylin paper (paproxyl) being about 0.03 in. thick. When the box *C* has received enough of the saturated paper for a batch, it is removed and another box substituted. The removed box is closed to prevent evaporation, permitted to stand one to three days, at room temperature, or until the mass has been thoroughly penetrated by the solvent, after which the actual conversion in masticating rolls is carried out. This ingenious method, once used considerably, has been supplanted by the more simple method of stirring the pyroxylin and camphor as follows:

In the process of J. and C. Schmerber and J. Arrault,[1] shown in Fig. 150, use is made of a hollow cylinder for receiving the plastic

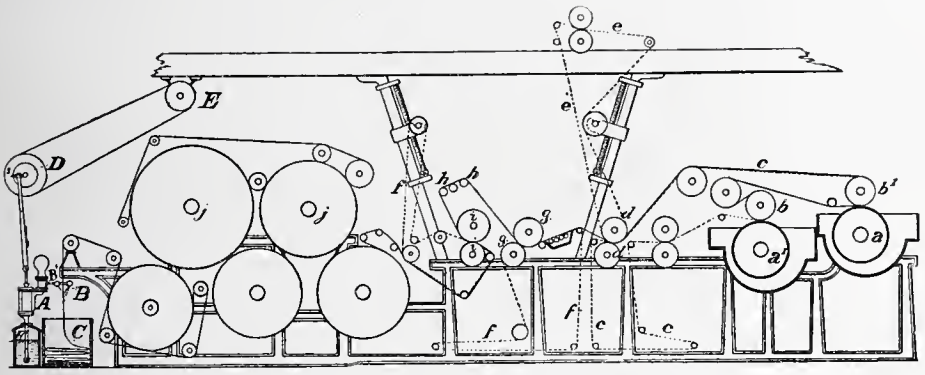

Fig. 149.—Cylinder Paper-Making Machine.

material, formed with a steam jacket and fitted with a piston that is to be reciprocated by suitable power, and the cylinder is connected by passages at its opposite ends with the grinding machine, so that by the movement of the piston the material is forced back and forth through the grinder until the operation of mixing and grinding is completed. The grinding and mixing operations are performed while the material is inclosed in air-tight spaces, as the result of which practically none is lost by evaporation.

One disadvantage of pressing the pyroxylin and camphor into cakes is the difficulty of afterward cracking and breaking the cakes so thoroughly that there is uniform penetration of solvent. In order to obviate this possibility and to dispense with the machinery for breaking the cakes and stirring in the alcohol,[2] the cakes after pressing are placed on edge in the box *B* between the metal pins and rods

1. U.S.P. 229477, 1880.
2. Process of J. Hyatt, J. Stevens and W. Wood, U.S.P. 296969, 1884.

RR. The receptacle is then covered, the solvent poured in through the aperture in the side, the plug *I* replaced, and the receptacle rotated by machinery until the solvent is sufficiently absorbed, when the cakes are left at rest for about fifteen hours and are then ready for conversion. Fig. 151 shows the arrangement preferred.

In the process of J. Hyatt and J. Everding [1] for mixing the pyroxylin pulp with the proper amount of solvent, the improvements consist

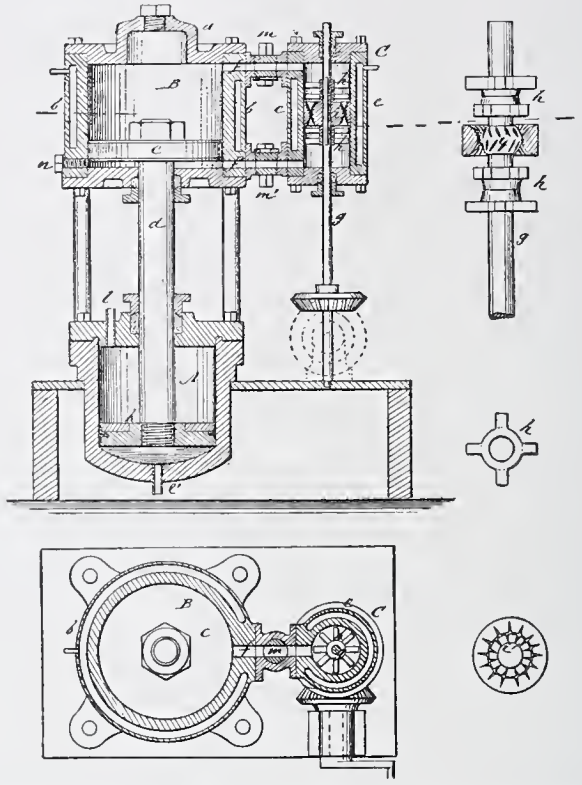

Fig. 150.—The Schmerber & Arrault Plastic Grinder and Mixer.

in introducing the solvent, in the form of a spray, in a cylindrical vessel which is partly filled with the pyroxylin pulp, and provided with a rotary sweep or agitator for the purpose of stirring up the mass. The pyroxylin is first ground into a pulp in an ordinary beating engine or pulp mill, and it is then dried in an isolated building on account of the inflammable character of the material. When thoroughly dried, it is taken in small lots or batches to the mixing apparatus shown in Fig. 152, the operation of which is as follows: The cylinder *A* is partly filled with the dry pyroxylin pulp, closed, and the agitator and pump set in motion. After the proper quantity of the solvent has been injected by the pump the agitator is kept running a short

1. U.S.P. 326119, 1885.

time, until the mass is thoroughly mixed. The mass is then removed from the cylinder and placed in an air-tight box for a period of two to three days, when it is ready for conversion in masticating rolls or otherwise, as required.

Where it is desired to first dry the pyroxylin and then incorporate the solvent with it before the camphor is introduced, the method [1] shown in Fig. 153, may be used. In this apparatus A is an ordinary tumbling barrel of a capacity to hold from three to four times the amount of pyroxylin pulp required for a batch. It is mounted and slowly

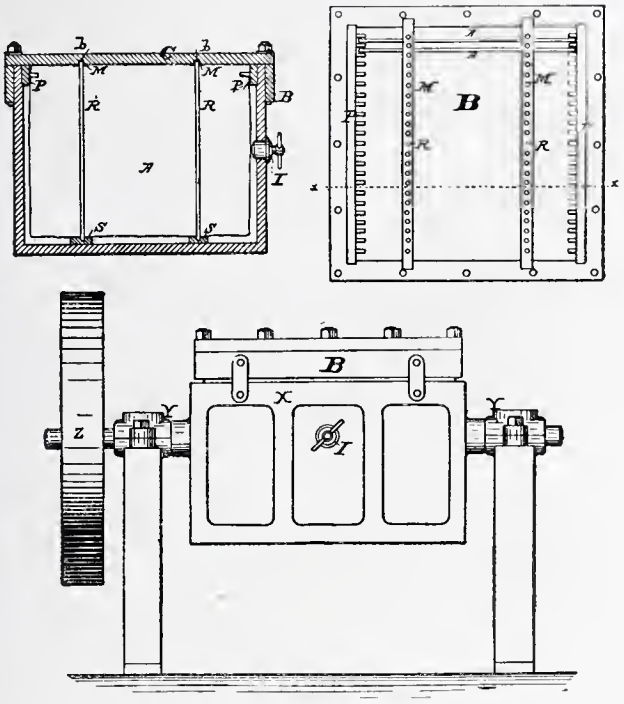

FIG. 151.— Combining Pyroxylin with Camphor.

revolved upon a stationary shaft B in the bearings aa by means of a spur wheel C and pinion D. The pinion D is secured upon a shaft d, which receives motion from any convenient prime mover by belt and pulleys. Two sets of agitator arms a' a' project from the inner periphery of the barrel A, and the stationary shaft B is provided with a corresponding number of fixed arms b, so as to cover the spaces between the revolving agitator arms a' a'. The barrel A is also provided with a door A', to permit the removal of the mass when mixed, and facilitate the cleaning of the barrel. The small opening a a. in the cover is for the purpose of introducing the different materials which constitute the mixture, and is provided with a stopper. After

1. U.S.P. 331241, 1885.

mixing the alcohol and pulp they are allowed to rest in the barrel from two to five hours, to insure a perfect combination of the materials by absorption. Without removing the pulp and alcohol from the apparatus, next mix with from 40–50 parts of powdered camphor, adding the camphor gradually in successive portions, and thoroughly combining each portion with the pulp before adding more. After the materials have been mixed together they are removed from the apparatus and kept in an air-tight box from one to two days, after which it is in condition for the final treatment by masticating rolls.

The methods of combining camphor and pyroxylin in the United

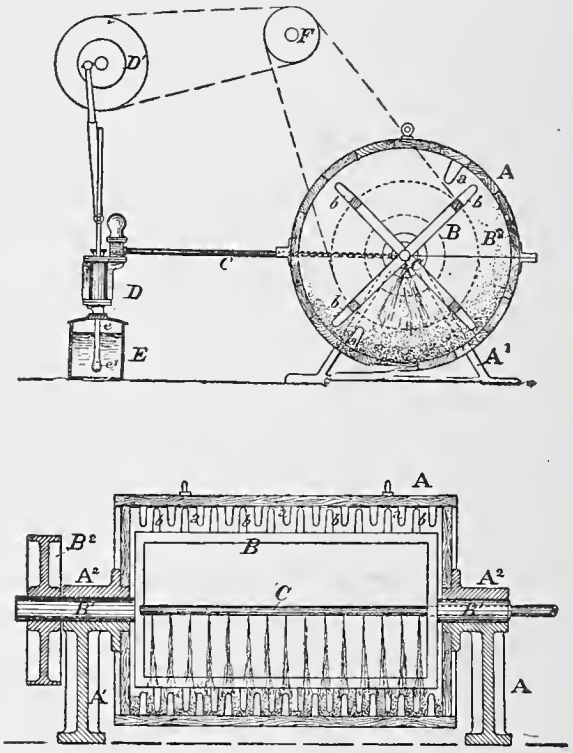

Fig. 152.—The Hyatt & Everding Process for Making Solid Pyroxylin Compounds.

States are nearly all worked out on the principle of the use of the minimum quantity of solvent and not attempting to recover it, rather than the use of large volumes of fluid and attempting to refrigerate the gases and obtain a portion back for reuse. Where an attempt is made to combine so small a portion of solvent by forming a liquid solvent of the camphor dissolved in alcohol, and applying it, those portions of the pyroxylin which are first brought into contact with the solvent will absorb it in such quantities as to take more than their proportion, while the other parts will be left untouched; and such is the tendency of the dry portions to remain in that condition that

any practical amount of subsequent mixing will not correct the want of uniformity in the mass. While this is true, yet it is also true that in process of time, if the mass is allowed to stand, the solvent will partially leave those portions with which it first comes into contact and be absorbed in a limited way by some of the dry pyroxylin in its immediate neighborhood. J. Hyatt[1] has taken advantage of this limited spreading of the solvent throughout the mass to effect a good mixture by bringing the pyroxylin and solvent together in small portions, and in such a manner that, although each particle of the fiber

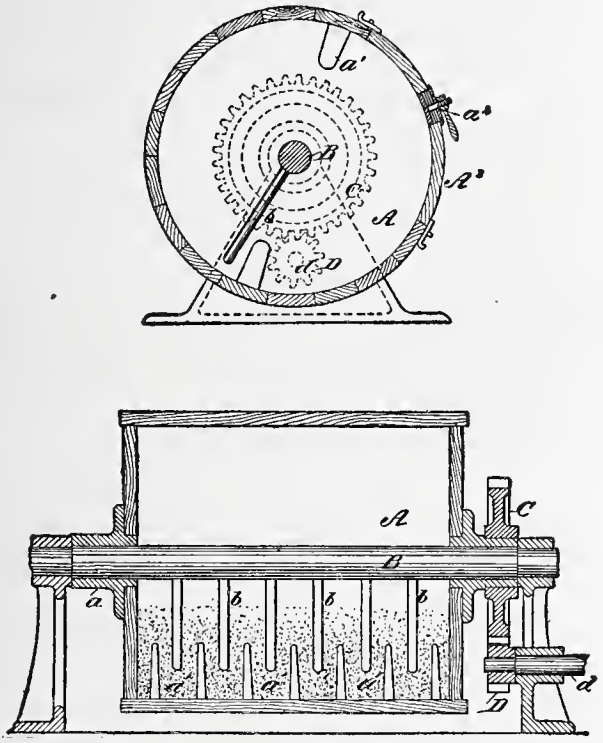

Fig. 153.—The Hyatt Pyroxylin Plastic Mixer.

may not be at first acted upon by its proper quantity of liquid, still the combination will be close enough to permit of the complete substantially uniform absorption of the solvent when the mixture is allowed to rest. To effect this result (Fig. 154) a hopper is taken to deliver the dry pyroxylin pulp through a meter or measuring-machine A' to a chute A^2. This chute is hinged at its upper end, and suspended by a rod a, or other suitable means, at its lower end, so that this end may be raised or lowered to regulate the quantity of the pulp passing over it. In order to keep up a steady and uniform movement of the pulp, a slight but quick reciprocating movement

1. U.S.P. 331242, 1885.

may be imparted to the chute by means of the lever a' and the grooved cam a^2. The cam a^2 is mounted upon a shaft A^3, which receives motion from the main shaft B, from which the meter A' is also driven by belt and suitable pulleys; but the reciprocating movement is a desirable and essential requisite. From the chute A^2 the pyroxylin pulp passes through a meter, provided with the hopper c, into a receptacle or can C. Immediately below the inlet of the can a sprinkler d is attached, which consists of a tube provided lengthwise with a number of fine perforations pointing downward in the direction of the falling pulp. This sprinkler is supplied with spirits of camphor

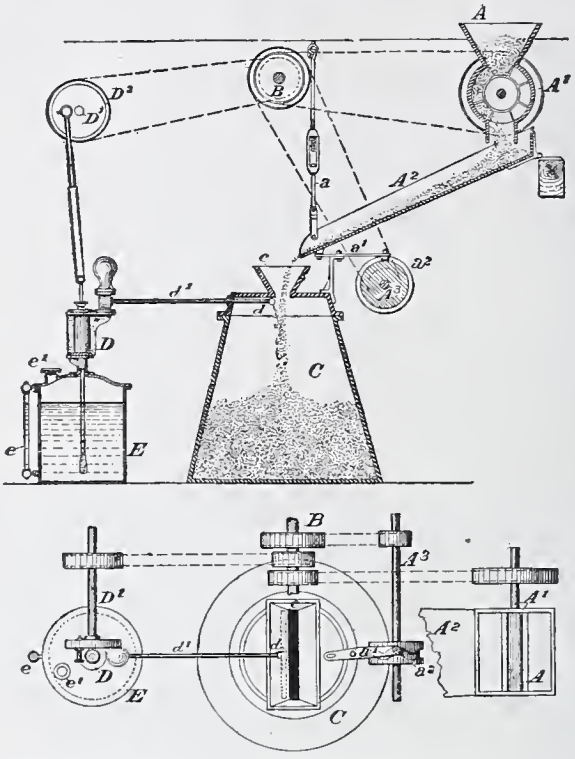

Fig. 154.—The Hyatt Method of Combining Pyroxylin and its Solvents.

from a can or tank E, through the pump D and its delivery-pipe d'. The can E, which contains the spirits of camphor, has an opening e', for the admission of the solvent, and a gauge or graduated glass tube e, for measuring the contents. The suction pipe of the pump is provided with a strainer to prevent any foreign matter from passing through the pump to the sprinkler.

The pump D is worked by a crank shaft D'', which receives motion from the main shaft B. The crank disk D^2 is provided with a slot, so that the crank-pin may be moved from or toward the center of the shaft, for lengthening or shortening the stroke of the pump-piston,

and thereby to increase or decrease the quantity of spirits of camphor delivered to the sprinkler. It will also be understood that, as the pump is driven, primarily, by the main shaft *B*, and the meter *A*, which regulates the quantity of pulp to be conveyed to the can *C*, is also driven by the same shaft, in other words, that their motion is coincident, the quantity of spirits of camphor supplied to the sprinkler must be at all times proportionate to the quantity of pyroxylin with which it is brought in contact.

Introduction of Stabilizing Agents is usually made at the same time the alcohol is added, reference being made to those stabilizers used in transparent plastics as distinguished from the pigments and other opaque bodies. The stabilizers, which are usually alcohol-soluble bodies like urea, are first dissolved in the alcohol, and sprinkled over the ground pyroxylin and camphor in the converting boxes. The nature and amount of antacid added will depend, of course, on the nature of the pyroxylin and the uses to which the plastics are to be put. (See diphenylamine, Chapter XVIII.)

The Stabilizing of Pyroxylin Plastics is of much more importance than that of films and lacquers, due to the fact that the slight alkalinity of the atmosphere makes the latter an excellent stabilizing agent, and in drying lacquers to fine films the air is brought into such intimate contact with the nitrocellulose that the trace of alkalinity present appears sufficient to retard the development of subsequent acidity. In the old patents and descriptions and before the time of poaching and introduction of agents tending to retard and neutralize any free acid formed in the pyroxylin, inventors stated that the free acids etched the iron rolls used to mix the nitrocellulose and other ingredients very badly, and someone in endeavoring to overcome this excessive acidity took out a patent for nickelplating the rolls to "overcome this natural although troublesome property of azotic cotton, which sometimes is so great as to make sticking plaster made from it to burn the skin" when applied as a collodion.[1]

Transparent plastic is much harder to keep stable than translucent and opaque, due to the stabilizing action of the zinc oxide and carbonate and other pigments present in the latter, and usually in large quantities. Therefore efforts have been turned almost exclusively to the discovery and application of antacids which when applied to colorless plastic, will not interfere with the transparency, brilliancy, and appearance of the sheet, and especially will retard or prevent the gradual formation of a yellow or brown color in the sheets upon long storing, seasoning, or exposure to the atmosphere. A satisfactory

1. A. Parkes (E.P. 2709, 1866) patented the use of platinum-plated rollers.

antacid for transparent plastics must fulfill many conditions, among which are the following: (1) There must be no visible antagonism between the stabilizer or camphor and its substitutes used; (2) must be soluble in a pyroxylin solvent, and not precipitated in a granular or amorphous form upon evaporation of the solvent, thus clouding the sheet; (3) the point of decomposition must be above the temperature at which the mass is workable commercially as a plastic; (4) the products of its decomposition or union with free nitric, nitrous, or sulphuric acids must possess the same properties of solubility, stability, and absence of granulation as noted above. The use of antacid compounds must be regarded as an additional safeguard after the cellulose nitrate has been poached and washed until laboratory tests give a high heat test, the addition of stabilizing agents to the plastic presupposing that at the time of such addition there is no need for its presence, but only as an ever-present safeguard to check future decomposition in its incipient stage. For this reason, it is evident that, to be effective, the antacid must be most thoroughly incorporated with the plastic mass.

Urea as an Antacid has been known at least from as far back as 1855, in which year G. T. Hase described a method of correcting the acidity of photographic films by the use of a small amount of urea.[1] It is to-day, the most important and widely used pyroxylin plastic-stabilizer. R. C. Schüpphaus in 1894[2] described the value and application of urea in connection with the stability of nitrocompounds, in which he advocated the use of $\frac{1}{2}$–2% dissolved in wood alcohol or similar solvent and added to the mass with the camphor just before conversion. In this manner the neutralizant is completely disseminated through the plastic mass. Any nitrous or nitric acid subsequently generated in the plastic coming in contact with urea would react, yielding carbon dioxide, nitrogen, and water—all harmless as inducing further deterioration. The previously proposed neutralizants, including sodium silicate (water glass) so extensively used in the earlier days of plastic development, were found either objectionable from the water necessarily introduced in order to dissolve them, or were inadmissible because of the discoloration which they were apt to produce. In urea these two objections are removed.[3] In 1897 J. Stevens[4] patented

1. Wilh. Horn's Photographische Journal, (Prag. Verlag von Otto Spamer, Leipzig) Vol. 3, No. 3, p. 15 Jan., 1855.

2. U.S.P. 514838, 1894; E.P. 22384, 1893. If urea nitrate or sulphate should be formed, they are colorless, stable, and odorless.

3. J. H. Stevens applied for urea as antacid by Letters Patent, U. S. Serial 529603, filed Nov. 22, 1894. Not granted as the result of U. S. Patent Interference Suit No. 17379 between J. Stevens and R. Schüpphaus.

4. U.S.P. 593787, 1897; Russ. P. 12649, 1907; diethyldiphenyl urea and tetraphenyl urea were found most serviceable.

and described the use of urea sulphate, and C. Claessan [1] found that the decomposition of substituted ureas in which all the hydrogen atoms are replaced by organic radicals decompose more readily in presence of traces of inorganic acids than urea itself, from which the inference is drawn that as antacids they would be more efficient by reacting with smaller quantities of inorganic acids. The substances advocated are *as*-diethyldiphenyl urea, m.pt. 54°, 5-diethyldiphenyl urea, m.pt. 79°, and tetraphenyl urea, m.pt. 183°. Many antacids proposed are antagonistic to pyroxylin, whereas urea and some of its esters and substitution products are direct although feeble nitrocellulose solvents. This can be shown by taking a low form of nitrocotton that is partially soluble in ethyl alcohol, and add a solution of urea in ethyl alcohol, when the turbid solution will immediately clarify. Other urea esters have been claimed as preserving agents, specifically the benzoate, salicylate, and naphthoate [2] being used in some compatible menstruum as alcohol, in order to insure a perfect mixture and intimate contact. Urea formate, acetate, propionate, butyrate, and valerate [3] are also recommended on account of the well-known fact that small amounts of acetic acid do not decompose pyroxylin or celluloid.[4] The usual amount is 1% of the weight of the pyroxylin. Lactamide [5] has been patented on account of its easy solubility in alcohol and freedom from discoloration in light, as distinguished from aniline, diphenylamine, and similar amido and imido bodies.

John H. Stevens has made an elaborate study of this subject, in which he has covered experimentally a wide range of inorganic bases with various groups of organic acids, as bodies suitable for use in plastics as stabilizers, in which the celluloid was to be used in the highly transparent condition. He gave stability to transparent pyroxylin compounds by combining with it a new class of preserving agents of

1. D.R.P. 178133, 1906.

2. U.S.P. 617450, 1899. Urea benzoate is miscible with melted camphor without decomposition, and has a feebly solvent action on some forms of pyroxylin. The salicylate resembles the benzoate in its compatability with pyroxylin and camphor, but yields somewhat darker products, and is weaker in preserving power. While it may seem peculiar that a base already saturated can exert a preserving or deterring power in development of traces of inorganic acid, experiments show that such is actually the case.

3. U.S.P. 589870, 1897. Urea acetate dissolves in about 7.5 parts 95% alcohol (ethyl). Most soluble in about 97% commercial wood alcohol. They all dissolve about 2% in refined fusel oil, the formate being least, and acetate most readily soluble.

4. For instance, in "solvent polishing," celluloid is dipped in 85% acetic acid without deteriorating the latter, and this is a common method of placing a smoothness and polish on plastics.

5. U.S.P. 608727, 1898, both the amides of α-hydroxypropionic acid (lactic acid) and β-hydroxypropionic acid (hydracrylic acid) are soluble in methyl and ethyl alcohols.

distinct efficiency. These included sodium, potassium, calcium, strontium, and magnesium lactates,[1] inorganic salts of chlorformates, chloracetates, chlorpropionates and chlorbutyrates;[2] the acetates, propionates, butyrates and valerates of lithium,[3] calcium,[4] zinc,[5] manganese,[6] magnesium,[7] lead,[8] potassium,[9] sodium [10] and the chlorformate and chloracetate of zinc.[11] Sodium benzoate,[12] salicylate,[13] camphorate,[14] and hypophosphite,[15] together with barium butyrate,[16]

1. U.S.P. 622293, 1899. Bronnert had previously used lactates in connection with artificial silk production, but not for transparent plastics. The salts were formed by adding excess of metallic carbonate to commercial "syrupy" lactic acid with heat, and filtering from undissolved carbonate. It is desirous that the usual brown color of commercial lactic acid be first removed by filtration through a layer of animal charcoal, in order to keep the transparency of the plastic as brilliant as possible. In distinction from urea, the lactates are not only nonsolvents of the pyroxylin employed to make moldable compounds, but they weaken the solvent action of the alcohols in direct proportion to their presence. For stiff plastics, sodium lactate is more convenient because it can be readily dissolved in alcohol, a smaller amount of fluid being used. It appears that methyl acetate aids the solubility of sodium lactate in methyl alcohol. Potassium lactate is the most soluble, the barium salt the least so. If more than 2% (calculated on weight of pyroxylin) be used, there is a tendency to cloud a transparent sheet, and often the excess of salt appears on the surface as a snowy exudation or fog. The inventor advises the following formula as suitable. Pyroxylin 100, camphor 40–50, wood spirits 60–75, sodium lactate 1 (all parts by weight).

2. U.S.P. 614514, 1898. Magnesium, lithium, and zinc monochloracetates in the order named are considered most efficient, the former giving a paler-colored plastic, and being more readily soluble in grain alcohol. Di- and tri-chloracctates are considered inferior to the mono-derivatives.

3. U.S.P. 612531, 1898. It was found, in general, that inorganic acetates which were most readily soluble in methyl or ethyl alcohol are most energetic antacids. Lithium acetate is more soluble than the corresponding formate, propionate, or butyrate and also less expensive. The butyrate and valerate possess a strong odor, while those of lesser molecular weight are odorless. It is claimed that the lithium salts are especially useful in tortoise-shell effects.

4. U.S.P. 622291, 1899. The propionate is preferred, the acetate is cheapest, the formate gives only a moderate transparency, the propionate and butyrate being best for highly transparent compounds. The valerate has to be used under extreme limitations, as it gives very poor transparency. Excess of these salts renders the plastic opaque and granular in appearance.

5. U.S.P. 630945, 1899. Zinc acetate is most freely soluble, but will not aid alcohol in dissolving pyroxylin.

6. U.S.P. 610566, 1898.

7. U.S.P. 621433, 1898. Magnesium acetate is difficultly soluble in ethyl alcohol, the formate and propionate practically insoluble.

8. U.S.P. 608726, 1898. Lead acetate imparts a light color to transparent plastic, and the absorption of carbon dioxide and change into lead carbonate are apparent in plastics containing the acetate, by a superficial opalescence.

9. U.S.P. 621434, 1899.

10. U.S.P. 622290, 1899; sodium acetate being preferable.

11. U.S.P. 622294, 1899. Zinc acetate imparts a light-yellow color to transparent celluloid.

12. U.S.P. 621382, 1898. Readily soluble in methyl and ethyl alcohol, acetone and amyl acetate. Best results were obtained by the use of 0.5–2%.

13. U.S.P. 612067, 1898.

14. U.S.P. 609475, 1898. Potassium camphorate is less soluble. Calcium camphorate is more soluble in ethyl than in methyl alcohol.

15. U.S.P. 610953, 1898. Not used at present.

16. U.S.P. 622292, 1899. The combinations of formic, acetic, propionic, butyric, and valeric acids with heavy metals result in the formation of salts which in

are all claimed to possess distinct value for certain and restricted uses. On account of the ready solubility of the butyrates in alcohol and the difficulty with which they crystallize, calcium [1] and other butyrates have a distinct value in highly transparent plastics. This quality of opposing crystallization and the consequent tendency to cloud an otherwise transparent film upon evaporation of the solvent portion, are possessed by the lactophosphates, the salts of which are extremely soluble in alcohol, and like calcium chloride, when dissolved in alcohol, they transform the latter into a direct and active pyroxylin solvent.[2] These desirable properties are common, but in a diminished degree, to calcium, barium, strontium, lithium, lead, and potassium lactates.[3] Potassium and other succinates [4] give good results, but are quite feeble.

The general method of use of the above-mentioned compounds, all of which are sufficiently soluble in wood or grain alcohol, is to make a 1–5% solution in alcohol, filter from undissolved residue if necessary, and add the alcohol containing the preserving body to the camphor and pyroxylin, intimately mixing during the usual conversion by mastication. The long period of seasoning to which plastics in bulk are necessarily subjected in order to eliminate last traces of volatile matter is a severe test upon any stabilizing medium, and the difference in stability of a plastic before and after seasoning is the crucial test of the efficiency of the added antacid.

Dehydration of the Pyroxylin Pulp by pressure or exposure to air either before or after admixture with the camphor is of vital importance owing to the extremely sensitive nature of the cellulose nitrates and their liability to explode under pressure, and especially at that particular stage of its treatment which approximates desiccation. The dehydration of this pulp has resolved itself into devising safe methods of drying.

many instances decrease in solubility in alcohol going each way from butyric acid. This is especially true of barium, lead, and calcium, the butyrates of which are more soluble in ethyl alcohol than the corresponding propionates or valerates.

1. U.S.P. 626732, 1899, described the uses of strontium butyrate as a stabilizing agent.

2. U.S.P. 610615, 1898. Calcium, potassium, sodium, bismuth, magnesium, and manganese lactophosphates being claimed as efficient. Iron lactophosphate is given, but, as is well known, this salt would produce highly colored compounds.

3. U.S.P. 630944, 1899. Sodium, potassium, calcium, and lithium lactates are soluble in methyl alcohol, but only the sodium and potassium salts are soluble in ethyl alcohol.

4. U.S.P. 613400, 1898. The sodium salt as an antacid is too weak; ammonium salt, which in 2% of the amount of pyroxylin present gives a slight yellowish-colored film, is stated to be especially applicable in tortoise-shell imitations, where a yellow tint is normally present. This also applies to other stabilizers which develop a yellowish tint when used in sufficient amounts to be distinctly beneficial. See also, E. Rouxeville, F.P. 393310, 1908; Self-Developing Plate Co., London, and T. Bolas, E.P. 21880, 1907.

The invention of J. Edson,[1] which had for its object the complete removal of the moisture from paper pyroxylin, consisted first, in introducing very dry air, previously cooled, into the pyroxylin under pressure, but at a temperature slightly above the freezing point, so that the moisture of the material under treatment was not frozen, but carried away. Second, the invention comprised a receiver for holding the moist pyroxylin with an agitating apparatus and air-distributing and discharging device, with arrangement for regulating the temperature and volume of the air admitted.

With a hydraulic press[2] and accumulator[3] devised by himself, J. W. Hyatt[4] patented a process in 1884 for drying pyroxylin by dis-

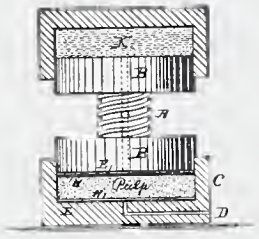

Fig. 155.—The Hyatt Hydraulic Pyroxylin Press.

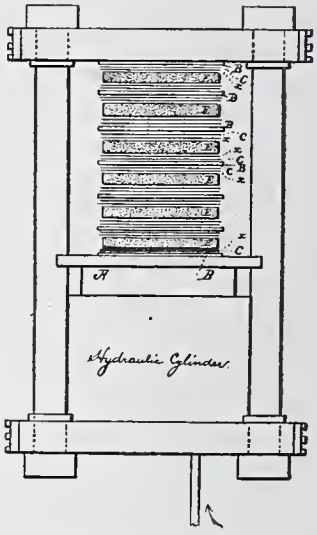

Fig. 156.—The Hyatt, Wood & Stevens Pyroxylin Pulp Desiccator.

placement of the water hydraulically, being the first one, in the United States at least, to suggest the displacement process of dehydration. By means of a screw *A* (Fig. 155), to actuate the plunger *B*, fitting in the receptacle *C* and provided with an outlet *D*, the damp pulp was placed in the cylinder, a piece of wire cloth *E*, having above it a piece of linen *H*, being used for the purpose of preventing the escape of the pulp. Thus having been placed in the receptacle, a suitable quantity of alcohol was introduced, and pressure applied, which forced out the aqueous particles. In the earlier days of celluloid manufacture a great

1. U.S.P. 249600, 1881, and based on the Reynolds refrigerating apparatus, then recently patented.
2. U.S.P. 180133, 1876, J. Hyatt and T. Crane; U.S.P. 200914, 1878, J. Hyatt.
3. U.S.P. 265229, 1882, J. Hyatt.
4. U.S.P. 296967, 1894.

many thousand pounds of paper pyroxylin was desiccated in this manner and without accident. By combining hydraulic pressure with the previously described method of drying by interposition of blotters between thin cakes of pyroxylin,[1] a single operation was found to be

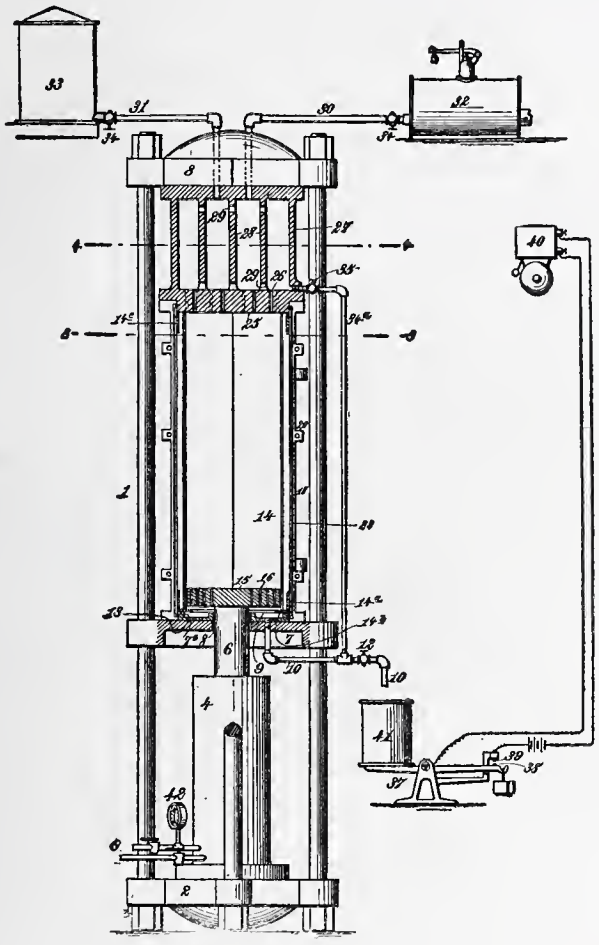

FIG. 157.—The Hyatt, Wood & Stevens Pyroxylin Pulp Desiccator.

sufficient to eliminate the moisture sufficiently to admit of the use of the pyroxylin without further desiccation.[2] (See Fig. 156.)

1. As described in U.S.P. 133229, 1872, I. & J. Hyatt.

2. It was found that only the water and not the camphor penetrated the blotters. The pyroxylin was preferably made into a cake or layer, and a pile built up consisting of a pad of bibulous paper, a layer of pyroxylin, another pad, a metal sheet, and this continued until a suitable height had been reached. The enormous pressure—over 1,200 tons and equal to 7,500 lb. to the square inch—to which the material was subjected, in the presence of the bibulous paper, expelled the aqueous particles until all but 5% of water was removed, the blotters being afterward dried and reused. This press is designed for the method where pyroxylin and camphor are ground together while the former is still moist, and without any addition of alcohol, the latter being added to the dehydrated pyroxylin-

The method of J. France [1] is of sufficient importance to be described in detail. Reference is made to Fig. 159, in which the nitrocellulose as it comes from the washing tanks is placed in a hydroextractor, which is revolved until the quantity of water remaining in the pulp is equal in weight to the pulp. It is then removed and formed into

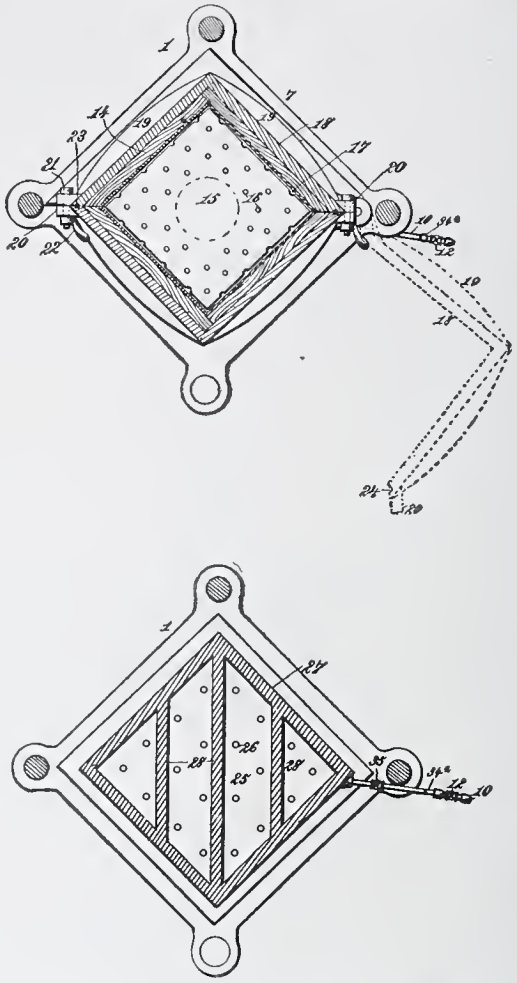

Fig. 158.—The Hyatt, Wood & Stevens Pyroxylin Pulp Desiccator.

separate 2 lb. lots, each containing 1 lb. of the pulp with 1 lb. of absorbed or adherent water. A piece of muslin being laid upon the false bottom of the container, the first lot of pulp is laid thereon and compacted

camphor cake after breaking up. The method combines both pressure and absorption, eliminating the maximum of moisture in the minimum length of time, about forty minutes' pressure being necessary. No alcohol could be used to replace the remaining moisture, on account of the camphor, which in presence of the alcohol would immediately dissolve the pyroxylin. See Figs. 157, 158. See also process for desiccating pyroxylin in comminuted form, U.S.P. 297935, 1884, J. Hyatt.

1. U.S.P. 393751, 393752, 1888; E.P. 17692, 1888.

and a second piece of muslin laid over it. A second lot of pulp is then superposed on the second piece of muslin, and so on, until the container is filled with these layers of nitrocellulose separated by strips of muslin. The container is then closed and placed in the press-box, which is tightly closed, and the hydraulic press being operated, the ram 6 rises, carrying the false bottom 15 up with it,

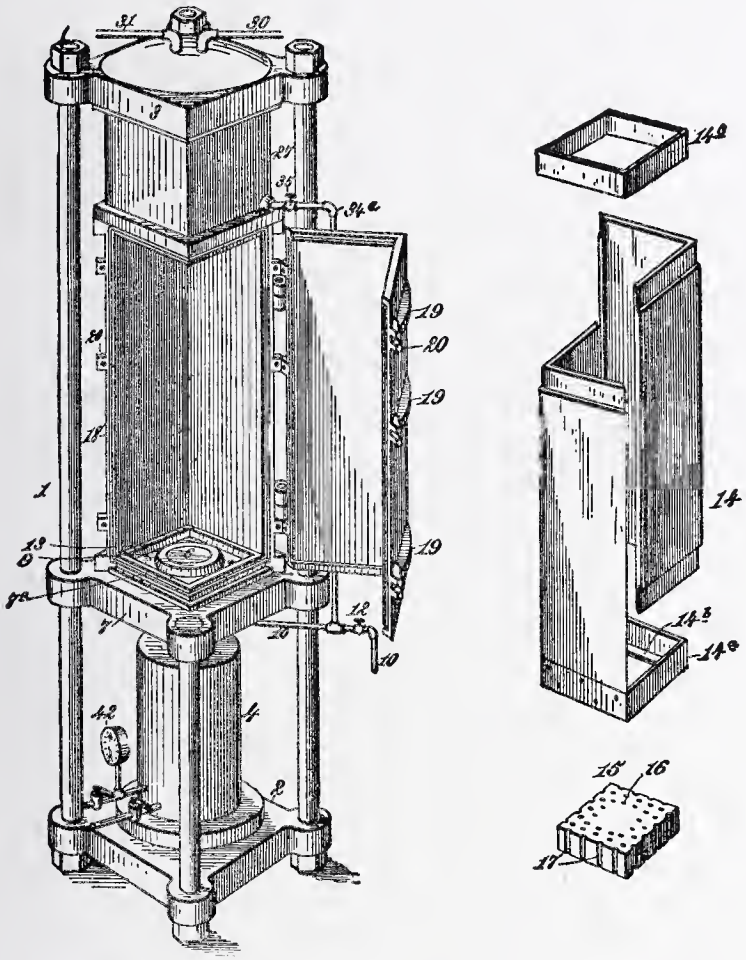

Fig. 159.—Apparatus for the Manufacture of Celluloid according to France.

compacting and pressing the nitrocellulose between it and the diaphragm 25. The pressure is increased to about 400 lb. per sq.in., at which point the ram is held for about an hour, the water expressed flowing off through the perforations 16 and channels 17 in the false bottom, whence it passes into the chamber 9 and out through the exit pipe 10, that which is driven up through the diaphragm 25 being carried off above by the outlet 34a. After remaining under pressure for about the time mentioned the cock in the air pipe 30 is opened,

and air is forced down through the compressed pulp, penetrating the fiber and opening the cells containing aqueous particles, which are carried downward by the air. A considerable percentage of water still remaining in the nitrocellulose is expelled by the air treatment alone. The air treatment is continued for some little time after the water has ceased to come away, and the air valve being then closed, the cock in the alcohol pipe 31 is opened and alcohol of 95% is allowed to flow into the chamber 27, whence it percolates through the diaphragm 25 and enters the pulp, through which it passes by gravity. The water still remaining in the pulp is driven downward before the descending body of alcohol, which latter, by reason of its less specific gravity, rests upon the slowly descending body of water.

Practical tests have proven that by the compression of the nitrocellulose about 30% of the contained water will be removed, while by the succeeding air treatment an additional 20% of water will be removed, thus leaving in the pulp about one-half of the body of water it originally contained. Knowing the weight of this quantity of water, a vessel, 41, is set on the scale 37, and the weight is placed at such a point that it will tip the beam when the weight of water remaining in the pyroxylin or nitrocellulose is received in the vessel 41. As soon as the electric call 40 announces to the operator that the water is all removed and received in the vessel 41 the alcohol pipe 31 is closed and a second vessel is substituted for the vessel 41, to receive the hydrated alcohol coming from the pulp, which may afterward be redistilled and saved. The air pipe 30 is then again opened and the passage of the alcohol downward is hastened by again driving air through the nitrocellulose, until the latter contains from 40–50%, by weight, of such alcohol. The air is then cut off, the ram is run down, and the container opened. The pyroxylin will be found in compacted layers, easily separable from each other by reason of the interposed sheets of muslin. The quantity of camphor necessary to complete the conversion of the pyroxylin is now placed between the layers, together with coloring matter and pigments, and the layers are piled one upon another in zinc-lined boxes and tightly covered, to await the action of the converting roll.

In order to govern the degree of pressure upon the pyroxylin, any form of safety valve or gauge, 42, may be attached to the cylinder, whereby the pressure will be indicated or let off at the instant it reaches the maximum point.

The method of pressure between folds of bibulous paper is effective but is a slow and expensive operation. Compressing air to a small volume and absorbing the heat given out by compression so as to

cause the deposit of aqueous vapor dissolved in its original volume, and subsequent warming by passing through a copper coil surrounded by either steam or hot water, is also an efficient method, but involves an expensive plant consisting of air pumps, steel reservoir capable of sustaining an immense strain, cooling and heating coils, and the expense of desiccating the large volume of air used. The essence of G. Mowbray's process [1] consists in depriving atmospheric air of moisture by refrigeration, and then raising the air to a temperature of not to exceed 60°, after which it is brought into intimate contact with the pyroxylin. It is no improvement upon the various hydraulic methods which, with relatively unimportant refinements, are based upon the principles of the machines of Hyatt and France.

The distinction in dehydrating processes must be borne in mind between the method of France—where pyroxylin alone is hydraulically pressed, and in which therefore alcohol could be used to replace the remaining moisture without exerting any dissolving effect upon the pyroxylin—and the process of Hyatt, in which the pyroxylin and camphor are ground together before the moisture is expressed from the former, and in which the remaining moisture could be not replaced by alcohols on account of the direct solvent action upon pyroxylin of the camphor and added alcohol.

Solvent Recovery. In the preparation of pyroxylin plastics according to the Hyatt methods, the amount of solvent relative to the pyroxylin is comparatively so small that its recovery is not practiced. The method of celluloid formation of Magnus & Co. of Berlin, requires a much larger percentage of solvent, and in this process solvent recovery has been practiced with considerable success. The mode of preparation by this process is said to consist in dissolving 50 parts by weight of pyroxylin in a mixture of ether 95, alcohol 5 in which has been dissolved camphor 28 (all parts by weight). The proportion of camphor to pyroxylin appears unduly high, as producing a mixture more expensive than necessary. While the literature states that stoneware pots covered with loaded rubber plates are used for dissolving purposes, undoubtedly the modern method of mechanical mixers with suction arrangement for the removal and condensation of ether vapor is used. After a homogeneous solution has resulted the mixture may be clarified if the plastic is designed for transparent articles, by filtration under reduced pressure with provision for condensation of ether vapor, or a portion of the solvent may be directly removed by partial pressure distillation, with refrigeration and condensation of the distillate of ether vapor. In such a method of con-

1. U.S.P. 349659, 1886.

centration of the plastic, the uniform escape of both alcohol and ether will be facilitated by a mechanical stirring device during the vacuum distillation process. In order to eliminate a small amount of water present from the moist pyroxylin undoubtedly used, from 5–10% of higher boiling-point solvent may be introduced and the temperature of the still finally raised above the vapor tension of water. When the solvent has been distilled to a point where the mass is of a semi-solid consistency, it may be taken out of the still, and the remainder of solvent removed by mastication under heated rolls and with pressure as previously described, no attempt being made to recover the small amount of solvent still left.

The mixture of alcohol and ether recovered may be dehydrated with calcium chloride or by passage through refrigerating coils, thus separating the major portion of the contained water, and sufficiently purifying the ether so that it may be reused in another dissolving process. Statements in the literature that the pyroxylin is dried upon hot iron plates, and that no attempt is made to recover the ether from a formula as given above, is not in accord with modern chemical procedure. Where ether is used as a solvent, the well-known fact that ether and air forms an explosive combination which is heavier than the air itself, calls for great precaution in ventilation in all processes where this volatile solvent is concerned. The methods of alcohol and ether recovery practiced in the manufacture of nitrocellulose powder in grains in the United States, as described in Chapter XVIII would be applicable, and very satisfactory from the point of economy in percentage of ether recovered to nitrocellulose dissolved or gelatinized. In the method of Schering in forming the non-plastic celloidin described in Chapter XV, the pyroxylin is brought into solution with a highly volatile solvent mixture, and after clarification by filtration, the pyroxylin is reduced to a non-moldable solid form by vacuum distillation, the fluid being recovered and used again. In the formation of that purified form of cellulose nitrate called "photoxylin" a similar method of filtration and reduction to solid form by reduced pressure distillation is resorted to, the major portion of the solvents being regenerated.

The question of the advisability of solvent recovery hinges on the amount of solvent present, it being evident that it is much more advisable and economical, where possible, to use a minimum of solvent than a larger volume and resort to subsequent recovery.

Conversion of Pyroxylin into Plastic. After the moisture has been sufficiently expelled by pressure—which in rare instances requires two to three days of twenty-four hours each—the cakes are broken into

small pieces by being passed through rubber cracking rolls, after which, in order to guard against loss of camphor, the mixture is immediately placed in zinc-lined containers or "converting boxes" with tightly fitting covers. The proportion of camphor used is about one-fourth by weight of the pyroxylin present in those plastics containing no pigment. The necessary amount of alcohol is sprayed into the boxes while the contents are being thoroughly stirred, the amount of fluid seldom exceeding 10% of the weight of pyroxylin present,[1] the addition of alcohol requiring from ten to thirty minutes, depending on the size of the batch operated upon. The cover is carefully adjusted and the mass left to ripen or the alcohol to thoroughly penetrate,[2] this usually requiring several hours, or better, over night.[3]

When the proper penetration of alcohol has taken place as indicated by the milky, glazed appearance of the mass in the converting boxes, it is taken out and subjected to the action of masticating rolls in a

1. If the material in the converting box is freely exposed to the air for several days, the temperature of conversion in the masticating rolls would be increased, and this not alone due to possible evaporation of solvent. When proper penetration of the alcohol has occurred, the mass will take on an easily recognized and uniform color throughout, and this usually occurs in twelve to fifteen hours after the alcohol has been added, the time being decreased with the thoroughness of stirring during the period of adding the alcohol. It appears as if the alcohol exerted a slight solvent action on the pyroxylin, because there is occasionally formed a sort of glaze upon the surface of the broken cakes, indicating solvent action to have taken place. When such a glazed particle has been placed upon the microscope stage and examined, no paper or cotton filaments or other structural form can be noted. Although a great deal of experimentation has been given to the subject, it is as yet an unsettled question as to whether the camphor does exert a chemical action upon the pyroxylin, and whether a true solution or a physical adhesion results. It is a fact, however, that the camphor may be removed entirely from the converted mass by means of benzine, benzene or other agents, but not by alcohol. For description of an excellent celluloid press see W. Ludovici, D.R.P. 170196, 1905.

2. The alcohol is added for the sole purpose of lowering the point of conversion of the camphor in order to produce a plastic moldable and workable at a temperature below that of the melting point of camphor. All the commercial celluloid at present manufactured has a converting point or plasticity much below that of boiling water, and in the neighborhood of 80°; in fact it would at the present time be practically impossible to sell commercial celluloid which could not be worked or molded at the temperature of hot water. The usual method of forming combs, etc., is to place crude sheets cut properly in a mold which is then plunged into hot water until the celluloid has softened, and adapted itself to the form of the mold, after which the latter is taken out of the water, cooled, and the ornament, properly formed, removed from the die. The ideal converting point of a pyroxylin plastic would be that temperature just sufficiently above maximum summer heat so that ornaments would not soften in the hottest weather when exposed to the direct rays of the sun.

3. As the solvent in the Hyatt processes is so small as to be seldom if ever recovered, just sufficient solvent is added to thoroughly permeate the mass, and cause the same to continue sufficiently fluid to stand the necessary mastication without becoming too solid. If the heat of the masticating rolls is too high or unduly prolonged, a small amount of alcohol may have to be added to the plastic mass while still being manipulated under the rolls. When the mass is first placed on the rolls, no heat is applied on account of the friction gradually warming the mass as it passes and repasses through the rolls.

machine (Fig. 160) similar to that used in the rubber industry, being passed back and forth through the rolls for a period of from thirty to fifty minutes, the hollow rolls being steam heated and kept at a temperature of 58–68°.[1] The longer the masticating process is carried on, the more nearly transparent does the plastic become, the time of mastication being governed by the appearance of the rolled plastic. The rolls are arranged so that cold water may be admitted to their interior instead of steam, if the heat becomes excessive.

After masticating the required length of time, the mass becomes porous celluloid, the majority of air bubbles have been removed, the mass has lost all structural form, and has been become an easily workable, doughy mass, which may be readily stripped from the rolls,

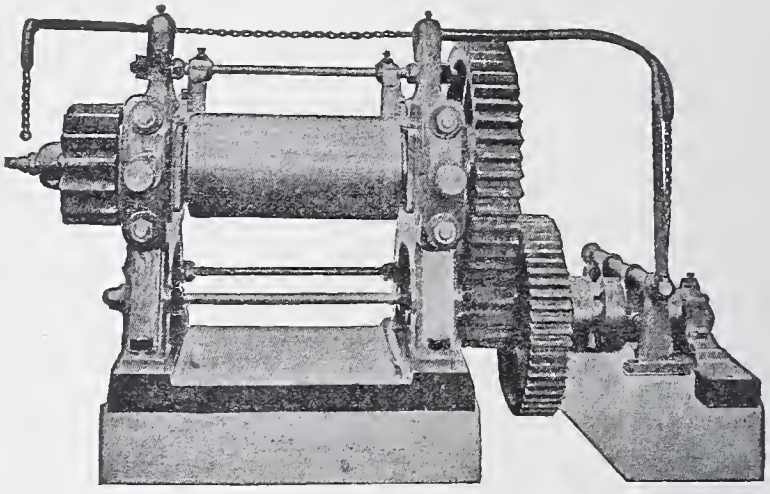

Fig. 160.—Pyroxylin Plastic Masticating Machine.

a stripping edge being obtained by cutting through the mass with a knife. The crude celluloid is now placed in stuffing machines and forced out into tubes, rods, or other suitable forms, aggregated into blocks and planed or cut into strips and sections, or formed into the various articles of commerce to be described.

Horace Miller[2] has invented a process for the removal of considerable of the solvent and moisture remaining in the plastic after leaving the masticating rolls, which materially lessens the time of seasoning. This is accomplished by means of the apparatus shown in Figs. 161, 162, in which is drawn the side elevation of an evaporat-

1. The lower the temperature and the greater the pressure, the less solvent will be required, due to diminished evaporation. If the plastic is left for several months before being placed in stuffing machines, the inflammability appears to increase, due to changes in the pyroxylin.

2. U.S.P. 508112, 1893.

ing press, the plates, blotters, and cakes of plastic material being shown under pressure, and the plates included in the electric circuit.[1] The cakes of material *G*, constituting the material as taken from the masticating rolls, and while still warm and soft, are each placed between layers of blotters or other absorbent *H*, arranged between pairs of plates *I*, and when the head *D* is filled, the current is turned on and pressure applied. By means of the electric current connected with each inter-

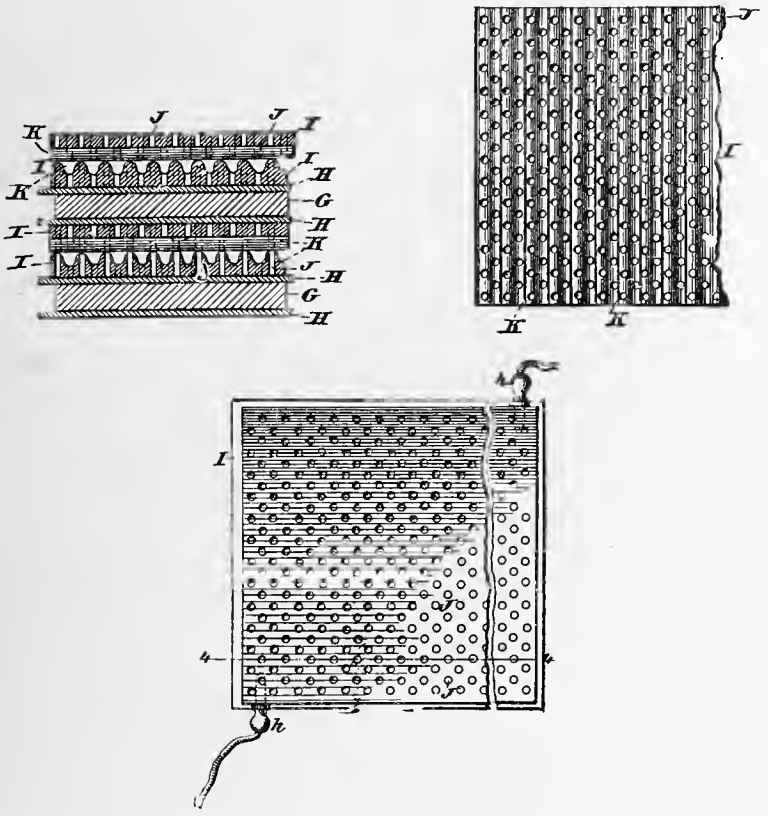

FIG. 161.—The Miller Apparatus for Drying Pyroxylin Plastics.

posed metal plate, heat is applied to the plates just sufficient to vaporize all solvent and moisture absorbed by the blotters, so that instead

1. Fig. 161 is a detached plan view of the outer or smooth face of one of the plates, and a like view of a portion of the opposite face of said plate, and Fig. 162 a detached vertical section through a bank of the plates, blotters, and cakes of plastic, the section being on the dotted lines 4–4, Fig. 161. In the drawings *A* designates the hydraulic cylinder, *B* the plunger, *C* the platen on the plunger, *D*, *E* the top and bottom heads and *F* the supporting rods. The plates *I* are perforated and corrugated, and arranged in pairs with the corrugated surfaces in face to face contact, the corrugations in one plate, however, extending at right angles to those of the next adjoining plate, so as to cross each other and form outlets for the escape of the moisture which may pass into the perforations. The perforations referred to are designated by the letter *J* and the corrugations by the letter *K*.

of several times changing blotters as in many of the earlier processes a continuous pressure and warmth is exerted until no more solvent and moisture is absorbed, when the plastic may then be removed to the seasoning chambers and the drying completed in a fraction of the time otherwise required. The current heating the plates is controlled by a rheostat, in order that the plates may be given just sufficient

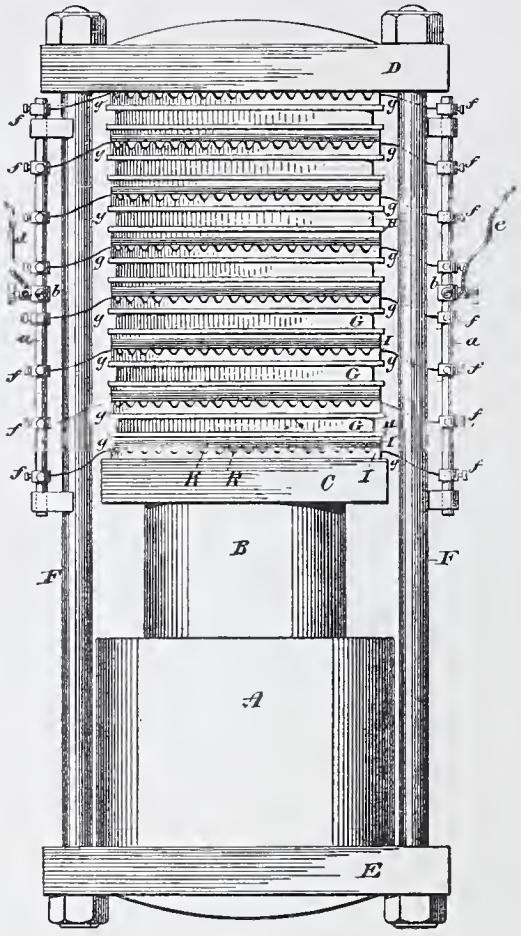

Fig. 162.—The Miller Apparatus for Drying Pyroxylin Plastics.

heat appropriate for the material under treatment and according to the nature and condition at the time of applying the pressure. As the amount of moisture and solvent becomes reduced from continued heat and pressure, the plates are heated to a higher temperature to drive off the remaining portion of moisture and alcohol. This method is an important time-saving step between mastication to complete conversion and the elimination of last traces of solvent by the customary curing or seasoning process, and is especially applicable where the

maximum amount of solvent must be expelled in order to secure the minimum of warpage, as in plastic sheets intended for the manufacture of triangles, T-squares, straight edges, and other exact instruments where a small warpage would seriously impair the value of the article.

Seasoning Crude Pyroxylin Plastic. After completion of conversion by mastication and heat as indicated by a uniform translucence of the softened pyroxylin and entire absence of dull, granular or cloudy spots indicative of incomplete or irregular conversion, the material may or may not be subjected to an intermediate pressure process according to the described method of Miller. If not, the remaining (practically so) portion of solvent is eliminated by placing the forms in tin or zinc-lined rooms on trays so arranged as to admit of free and thorough circulation of air, the temperature of the drying rooms being maintained day and night in the neighborhood of 50°, the drying process continuing from one day for thin sheets to two to four months with thick slabs and rods. The amount of solvent volatilized in the seasoning process as indicated by loss in weight is relatively small—seldom over 3%—the drying being considered complete when the interior of the mass has lost a peculiar lardaceous appearance indicative of the presence of traces of solvent, or when a small boring made in a block, and the small pieces dried to constant weight at 100°, does not lose more than 1–1.5% in six hours. There will always be a slight and continuing diminution in weight of plastic, due primarily to loss of camphor, but in commercial work this is negligible.

The methods of elimination of solvent by vacuum drying, while perhaps of value where small amounts only of material are treated, is not used where large amounts of plastic are undergoing the curing process from "green" to "seasoned" goods. The principal disadvantage to vacuum drying is the frequent opening and closing of the drying ovens, it being more economical to construct fewer large chambers than a larger number of smaller units. The following factors are taken into consideration in judging of the time required to complete the seasoning process, it being understood that in any instance there is not total removal of solvent, but sufficient removal to produce a minimum warpage, that minimum varying with the use to which the article is to be put, and being most rigorous in mathematical and physical instruments, as rulers and straight edges, where any appreciable warpage would render the instrument valueless for accurate work.

In judging of the time required for satisfactory seasoning, the factors taken into consideration are:

1. Completeness of solvent removal before introduction into drying chambers.

2. Nature of solvent present, the boiling-point governing speed of drying.

3. Purity of solvent used, as regards high boiling-point residues as impurities.

4. Size and weight of pieces of plastic.

5. Temperature of chamber and efficiency of air circulation therein.

6. Vapor tension of admitted air as regards degree of saturation with moisture.

In the seasoning of thin sheets of celluloid, where the sheets are each attached to a pair of frames, between which the material is secured

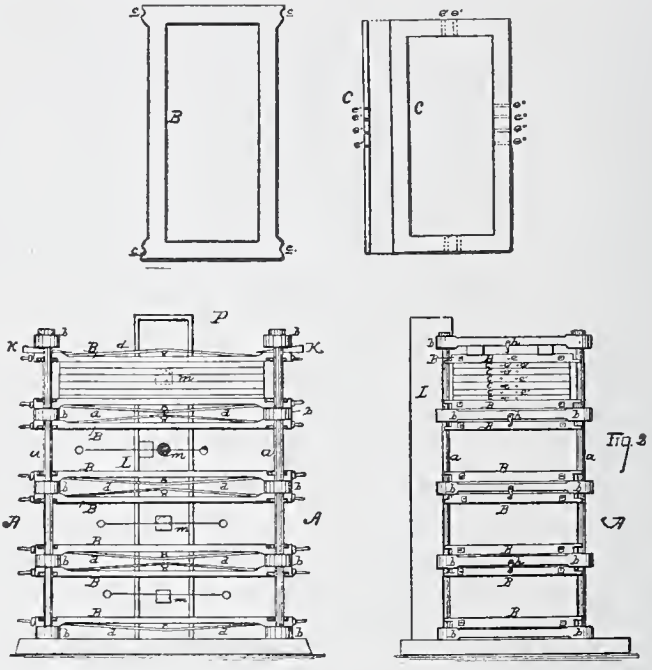

Fig. 163.—The Edson Method of Drying Celluloid.

by means of bolts and thumb pieces, there is often a considerable percentage of loss of material by reason of injury to the edges of the sheet between the frames, which often causes it to warp to such a state as to be unmerchantable. J. Edson [1] has devised a method of drying sheets which overcomes many of the difficulties just mentioned. It consists in providing an upright frame (Fig. 163), of the requisite strength and proportions, provided with horizontal rests or cross-pieces and adapted to support a series of horizontal frames between which are smaller frames intended to hold the sheets and locked by

1. U.S.P. 219235, 1879.

means of wedges. The smaller rectangular frames have rectangular interior edges, and are perforated horizontally, so as to permit of an artificial circulation of air between them. The extreme edges of the sheets are placed between the smaller frames, as many being used as convenient, when they are locked together. Heated air is then drawn or forced through the perforations in the frames until the sheets are fully dry. To effectuate the circulation of the air, the structure may be placed in a heated room and the air drawn through the perforations by suction. The highly important feature of the invention is the frames *C*, which should be carefully constructed.[1]

The McCaine Method of Seasoning Celluloid has for its principal object the elimination of air bubbles and last traces of liquid solvents.[2] The pyroxylin is dissolved in any suitable solvent—such as sulphuric ether and alcohol—to which is added a small quantity of oil of cassia, camphor, or other substance which will remain in the compound and act as a latent solvent when exposed to heat, and such pigments are also added as are required to give it the desired color, elasticity, and weight, the whole being mixed together, until the ingredients have become perfectly commingled into a homogeneous mass. The latter is then cast in molds of any desired pattern, and allowed to remain therein from twenty-four to forty-eight hours, when it will be sufficiently hard to admit of being cut into strips from $\frac{1}{4}$–$\frac{1}{2}$ in. in thickness. The strips are placed in a drying-chamber heated to about 50°, where they are allowed to remain about twenty-four hours, when they will have become sufficiently hard for further treatment. The strips are placed in a mold of any desired form and heated to about 65°, and while thus heated subjected to a pressure of about 400 lb. per sq.in. The material is thus compacted into a solid mass in a semi-dry state, having comparatively few air bubbles or spaces. It is to the material in this condition that this process is claimed to be preferably applied, although it is applicable to the material in any form if it contains a latent solvent.

1. The means of drying shown in the drawing, consists in placing the structure in a heated room or compartment (indicated by the letter *P*) and supplementing it with the vertical pipe *L*, provided with the apertures *m*, and connected with a suction pump having a discharge opening out of the compartment, as may be convenient. The frames *C*, having the horizontal apertures *e* in three of their sides, are inserted in place and locked, the apertures *e'* being in proximity to the apertures *m* in the pipe *L*, the parts being so adjusted that when the suction pump is operated a current through all the intervals between the sheets in all the sections will be created simultaneously. The suction pump being worked, the heated air is drawn into the intervals and across the faces of the sheets, thus speedily drying the sheets with but little buckling.

2. W. McCaine, U.S.P. 217232, 1879; 276443, 1883; Daniel and David McCaine, U.S.P. 286212, 1883, in which process turpentine or benzine is added to the formula to assist in the expulsion of air bubbles.

The process is as follows: The blocks formed in the molds, as above described, are converted into fine shavings, which may be conveniently done by a hand plane, or by turning in a lathe, and these shavings are rubbed through a sieve to reduce the material to a powder. When in this pulverulent state the volatile solvents may be entirely evaporated, and hence the fine particles composing it will all harden alike when exposed to the heat of a drying kiln. In fact, the finer the particles the more perfect will be the result and product obtained by the drying process. The powder is placed in a kiln heated to 50° and kept therein for about twenty-four hours, when it will be sufficiently hard for practical purposes. The dried powder is then placed in a mold of the form it is desired to produce, and the mold subjected to a heat of about 100°, and while thus heated a pressure of about one ton per sq.in. is applied to compact the powder into a solid, homogeneous mass.

The Horace Miller Method of Celluloid Manufacture, although somewhat complicated, is noteworthy because designed to eliminate some of the usual steps in manufacture, and especially the seasoning process, which is both time-consuming and has a tendency to discolor transparent plastics. To briefly recapitulate the steps in plastic production in order to more readily perceive the advantage in this invention, it will be remembered that after the paper has been nitrated and "whizzed," the cakes are then disintegrated by "crushing rolls," and the material formed thoroughly mixed with solvents and left in an air-tight box until the solvent has entirely permeated the mass, when it will be ready for the next step of the process, which is its subjection to heated calender rolls to complete the thorough mixing of the ingredients and the formation of a uniform homogeneous mass. The material is then pressed into slabs and sheeted or given other form, and seasoned in driers at a temperature of about 50° for the purpose of extracting as far as desirable the liquid solvents. The material is then in condition to be utilized for the various articles of commerce to which it is applicable, and may be molded into the desired outlines.

The molding of the celluloid may be performed in either of two ways. First, the stock may be placed in the mold and both then placed in a hydraulic press and heated. After the proper softening of the stock under the action of the heat, pressure is applied to close the mold, whereupon the mold and its contents will be cooled by water, and thereafter the pressure relieved and the molded article removed; or, second, the mold and stock may be placed on a steam table and there allowed to remain until the proper heat in the mold and softness

of the stock have been attained, after which the stock is closed within the mold and the latter placed in a cooling press under hydraulic pressure. This pressure will be continued until the cooling has been effected, when it will be relieved and the molded article withdrawn.

In regard to the above process of manufacturing celluloid it is important to note, as bearing on the present invention, that during the rolling of the stock on the heated calender rolls probably 50% of the alcohol (solvent) evaporates or is lost because of the great and ever-changing surface of the stock; also that the stock after leaving

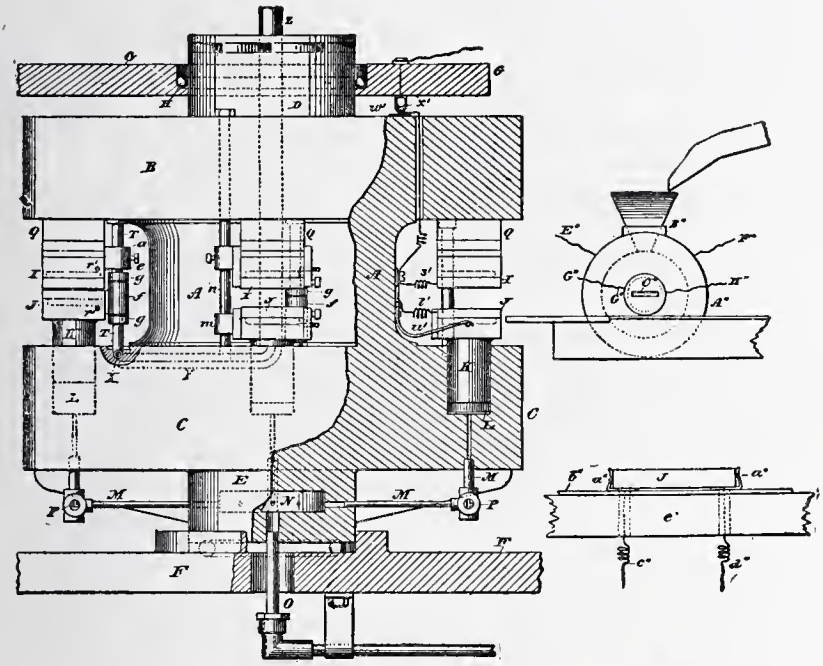

FIG. 164.—Celluloid Manufacture, according to Miller.

the rolls must remain soft enough upon being pressed into the large cake or slab, to permit the sheeting of the latter by means of knives, and that it is the excessive quantity of solvent in the material which necessitates the long-continued seasoning of the latter for its removal.

With Miller's process, shown in detail in the accompanying drawings (Figs. 164–167), the material is left in condition for immediate molding, instead of the long period of seasoning preparatory to forming the finished articles. In carrying into practice this portion of the invention, the granular material (pyroxylin, camphor, pigment) is taken from the crushing rolls, and discarding all subsequent steps and apparatus of manufacture just referred to, solvent, usually ethyl alcohol in amount of about 25% of the weight of the pyroxylin-camphor

mass is added, and the whole directly placed into the mouth of the heated screw stuffer A'', the mass being thoroughly kneaded therein and discharged a completed compound from the nozzle C'' in condition stated to be appropriate for immediately molding in the dies.[1] In the heated screw stuffer the evaporation of solvents is reduced to a minimum, not being exposed to the atmosphere as on the calender rolls of some methods; and since the material (celluloid) after leaving the stuffer is subjected to no process other than molding it may contain only that amount of solvent, which, according to the former

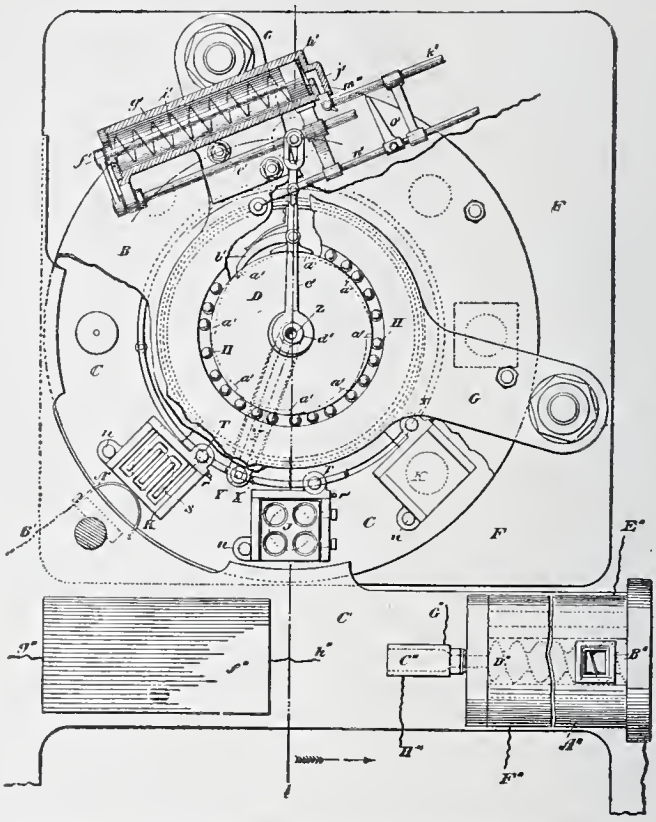

Fig. 165.—Celluloid Manufacture, according to Miller.

methods, would remain in the material after the ten days' or six weeks' seasoning in a heated drier. The material is thus from the dry granular form taken from the crushing rolls completed into the finished celluloid by a single operation, and leaves the stuffer with just the required amount of solvent necessary for its immediate molding in the dies, or to be run off into rods, tubes, or strips for commercial purposes. The celluloid leaving the stuffer, being already in a heated condition, may

1. U.S.P. 534445, 1895.

be at once molded in the machine shown without further heating. One of the difficulties encountered in the commercial use of this process, is the fact that the solvent is not always sufficiently eliminated so as to take the place of the usual process, and when the speed of production is slowed down to the point where the plastic is kept in the stuffer under heat and pressure until the volatile portions have been

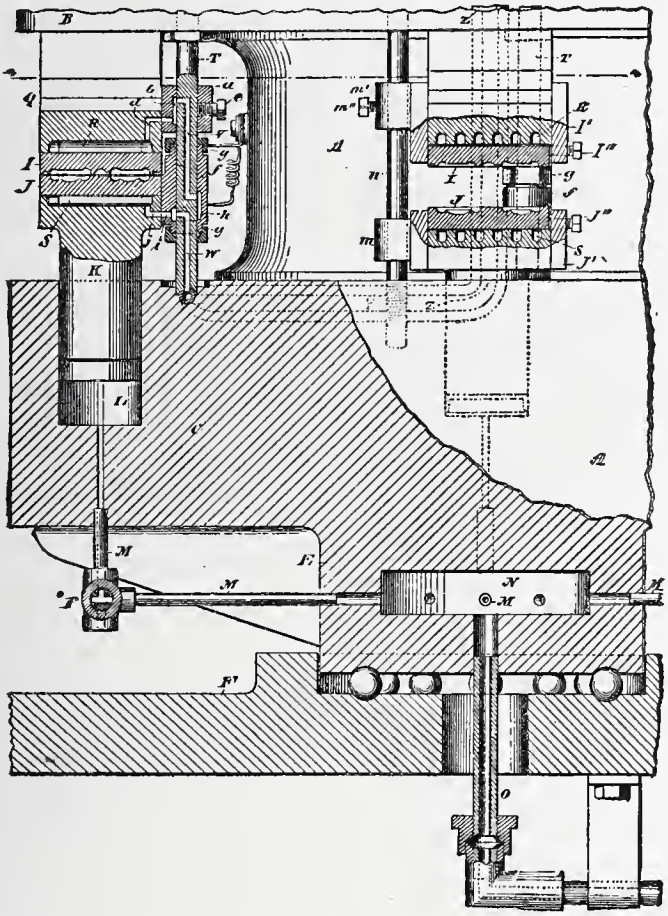

Fig. 166.—Celluloid Manufacture, according to Miller.

sufficiently dissipated, it is found that the amount turned out in a given time is not great.

Utilizing Celluloid Waste. As appears from a description of the foregoing processes of manipulation, especially in shaping the rough celluloid into finished articles, there is, of necessity, a large amount of small and waste pieces, their economical utilization being an important consideration. O. Monroe [1] was the first to describe a

1. U.S.P. 244916, 1881.

process for treating these scraps, which consisted in combined mastication and compression as shown in Fig. 168. He combined both admix-

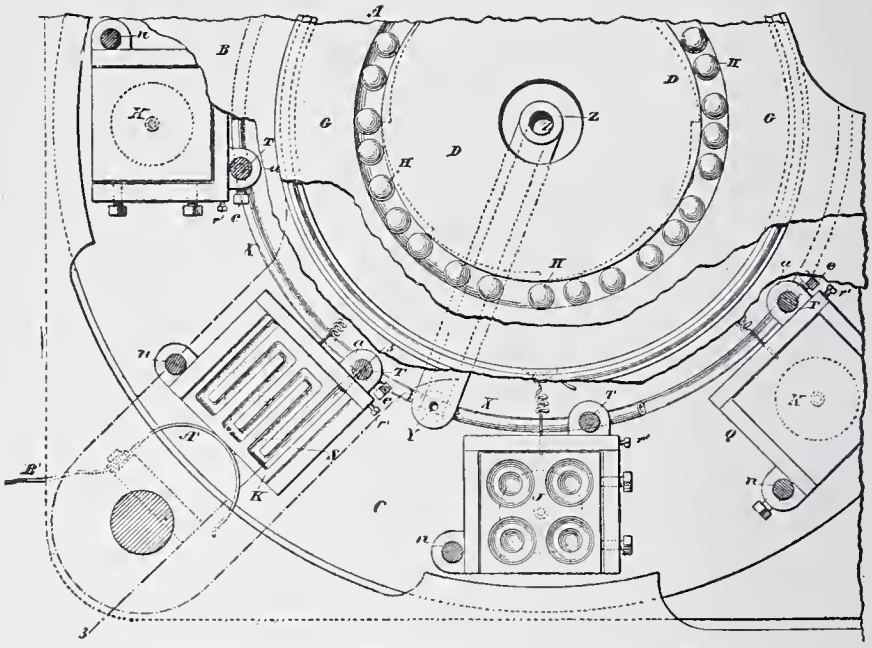

Fig. 167.—Celluloid Manufacture, according to Miller.

ture by grinding, and union by subsequent pressure. The waste was first treated with an appropriate solvent to soften it,[1] passed through

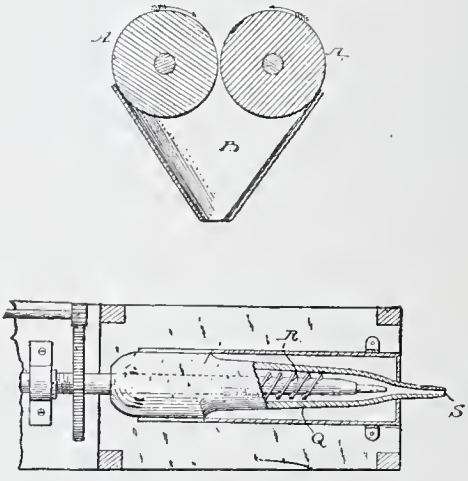

Fig. 168.—The Monroe Process for Utilizing Celluloid Scrap.

1. If the waste is in the "green" state it will usually be sufficient to dip it in the solvent for but a few moments, which will cause it to take up enough of the liquid to readily coalesce. If it is in the form of seasoned scrap longer immersion is necessary, from one to twenty-four hours being the usual time.

mixing rollers of ordinary construction A, which delivered it into the receptacle B, where by means of the pressure exerted by the small nozzle, the waste emerged as a homogeneous mass of the proper consistency.[1] In another method (Fig. 168) a machine consisting of a cylinder Q, containing a screw or threaded shaft R, and an outlet S, of reduced diameter is used, the material being fed into the hopper after softening by a solvent as described before. Upon issuing from the orifice S the mass will be found to be completely intermingled and blended. Any color may be introduced in the hopper with the scrap, when the issuing mixture will be found of a homogeneous tint, thus showing the effectiveness of the method.

In order to reduce the amount of solvent necessary to soften the scrap preliminary to mixing, I. Kitsee[2] fills a retort B (Fig. 169)

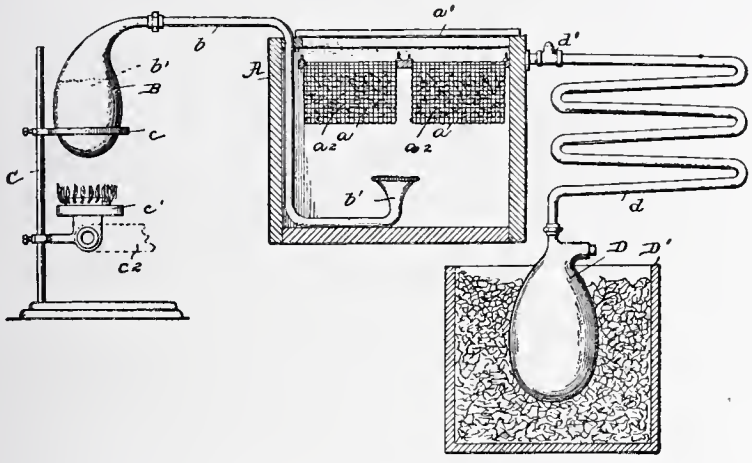

Fig. 169.—The Kitsee Distillation Method of Celluloid Scrap Recovery.

with the solvent, which is distilled through the scrap a^2 in the wire gauze basket a, and passing through the worm is condensed in the receptacle D.[3] After the mass has become sufficiently softened, it is removed and worked the same as with unseasoned plastic.[4] In the above described processes no provision is made for reclamation

1. It is quite important that the discharge orifice be of such diameter as to accomplish the proper compression or semi-solidification of the material without causing it to be too tightly packed. If the nozzle is too large the material may be delivered in such form that it will be comparatively valueless by not adhering, while if the nozzle be too small, great difficulty will be experienced in expelling the material from the machine, and when finally expelled it will be so nearly solidified as to require mechanical disintegration before use.

2. U.S.P. 767646, 1904.

3. The check valve d' is attached to the worm d to confine the vapors within the tank and penetrate the loose celluloid till a prearranged pressure is obtained. In this manner penetration is accomplished more quickly, with less solvent, and the surplus vapor will enter the condenser upon exceeding the determined pressure.

4. Process of H. Cave-Browne (E.P. 22299, 1903) is substantially the same.

where a fabric forms an integral part, as in the cuttings from celluloid collar and cuff manufacture, where a linen fabric forms a backing or lining of the material. This is best accomplished by placing the scrap in a barrrel and tumbling with weights as described under Pyroxylin Lacquers (Chapter X) the fabric being afterward separated by pressure. Methods have been proposed in which the fabric is completely

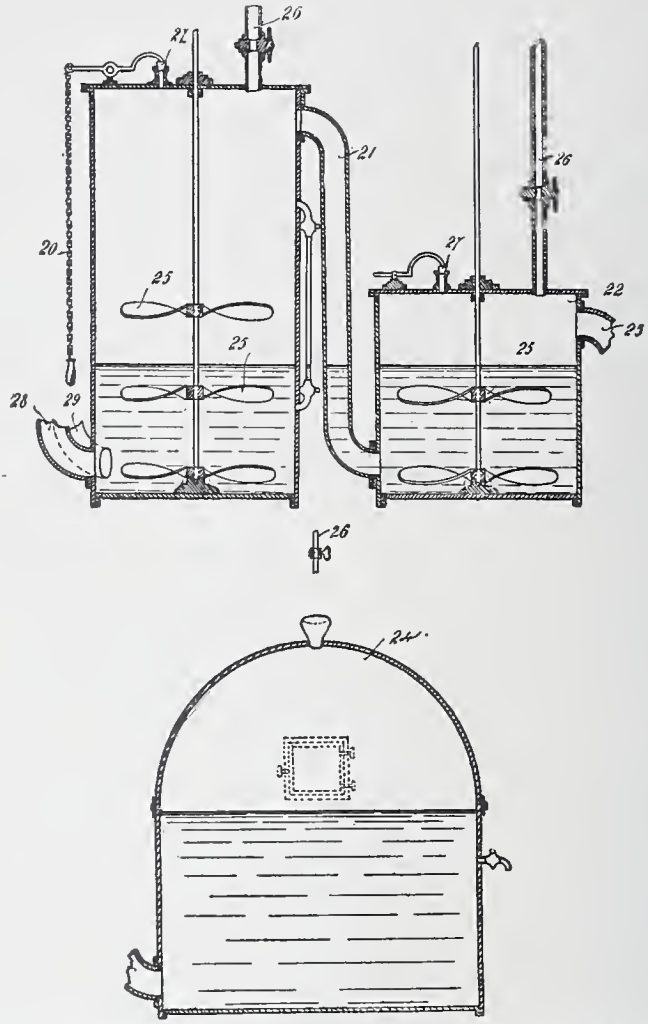

Fig. 170.—The Garbin Apparatus for Utilizing the Waste of Celluloid.

disintegrated, but the plastic has been so decomposed by the treatment as to be practically valueless, and this process is not used commercially.

In order to recover the individual constituents of the plastic, E. Garbin first cleanses the waste in a warm bath of slightly alkaline water, and then treats either by a dry or a wet process.[1] In the former,

1. U.S.P. 874181, 1907; Garbin & G. Gerard, F.P. 354389, 1905; G. Gerard, D.R.P. 181590, 1905; Garbin, Gerard & C. Gerard, E.P. 10319, 1905.

fragments of waste celluloid which are not too small are packed in a tube perforated at one end, which communicates with a condenser tube and receiver. The charge is ignited by inserting a heated plug in a small hole at the closed end of the tube. A slow combustion of the waste is thus induced, whereby camphor and nitric acid distill over and are collected. In the wet process, which appears more feasible (Figs. 170, 171), 20 is the reservoir in which the reaction of caustic soda on the waste celluloid is carried out, the reservoir communicating at its top with the bottom of reservoir 22, containing sodium bisulphite, and this again connects with reservoir 24, containing cold water. The material is fed in the twin tubes 28, 29, by being placed on the drum 32. The celluloid is decomposed by means of the caustic soda and the camphor is distilled off by steam, purified in the sodium bisulphite bath and finally collected in the cold water. In the dry process the acid liquid is mixed with the alkaline liquid from the wet process, the camphor distilled off and the sodium nitrate recovered.[1]

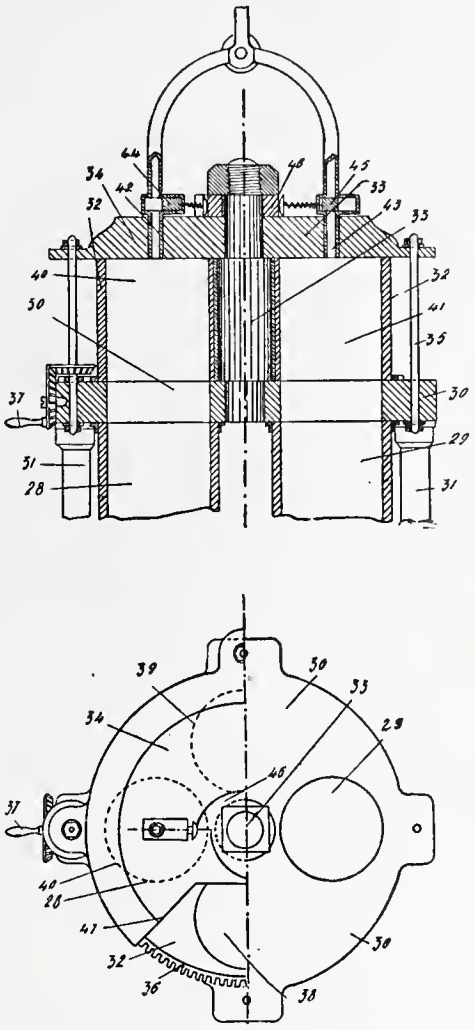

FIG. 171. — The Garbin Apparatus for Utilizing Waste Celluloid.

M. Tortelli[2] recovers the constituents from waste celluloid compounds by grinding the scraps to powder and digesting the mass with a sulphide, hydrosulphide, or thiocarbonate of an alkali or alkaline earth, preferably sodium. After ten to twelve hours' digestion, the denitrating agent is removed centrifugally, the residue treated with

1. With pyroxylin waste containing no camphor,—velvril, artificial silk, artificial cork and leather,—the operation is confined to simple hot treatment with caustic soda, distillation becoming unnecessary. In the case of explosives, as cordite, filite, ballistite, panclasite, and guncotton, special precautions must be taken that the temperature does not rise above 60°, and it is also advisable to introduce such substances into the bath by hand and not by means of the automatic distributor shown.

2. E.P. 9568, 1907; F.P. 373273, 1907; D.R.P. 205865, 1907.

about 3% alkali hydroxide and sodium alum, and the volatile constituents as camphor, or naphthalene removed by superheated steam distillation. The denitrating solution is used repeatedly and until it has become sufficiently rich in nitrates, to be treated for the recovery of nitric acid.

Denitration of Celluloid. Numerous attempts have been made to find commercial uses for denitrated celluloid, but in nearly every instance the denitrated product has been unable to compete in cost with similar products prepared from cellulose direct. In E. Weston's process[1] the nitrated cotton was treated with ferrous chloride, ferrous sulphate, or ammonium sulphide in aqueous solution. The celluloid was immersed in the deoxidizing bath in which it was left until entirely reduced to cellulose. This, after washing and drying, formed a dense, tenacious and flexible article, claimed to be especially applicable to the formation of belting and electric-light filaments.

In the process of H. Turgard[2] the usual denitrating preparation of ammonium sulphide, hydrosulphide, or similar alkaline sulphides is modified by the addition of silver sulphide to the alkaline sulphide in amounts of about 2 gm. per l. of solution. Whereas in the usual denitration of pyroxylin for carbon filaments by ammonium sulphide, it is claimed the usual yellow stain of free sulphur left on the filament after denitration and before carbonization, may be eliminated by the addition of small amounts of silver sulphide. The brown tint of the denitrated filament in this instance is readily removed by dilute nitric acid or bleaching agents, and even strong hydrogen dioxide. The denitration of pyroxylin plastics at the present time has not assumed great importance.

Pyroxylin Plastic Manufacture According to Tribouillet and Besancele.[3] According to this method, it is stated that 100 parts of pyroxylin are mixed with 42–50 parts of finely powdered camphor, the ingredients being inclosed in a stout cloth and this in turn in a haircloth bag, being then pressed hydraulically in a press with hollow sides carrying steam connection. After the maximum pressure has been established, it is maintained for one or more hours, and until practically no more moisture from the damp pyroxylin can be expressed. An arrangement is described for recovering the escaping vapors by inclosing the press in a box and connected by pipe with a refrigerating system, but as the vapors can consist of moisture containing only a minute amount of camphor, the value of recovery is not apparent.

1. U.S.P. 264987, 1882.
2. U.S.P. 508124, 1893, F.P. 218759, 1892.
3. E.P. 5057, 1878.

The cakes of pyroxylin and camphor upon being taken from the press are placed in a chamber, where it is said the remaining moisture is taken up by a deliquescent substance as calcium chloride or sulphuric acid, the conversion into celluloid being considered as completed when all the moisture has been eliminated. However, the final product as described above is not celluloid in any sense of the word, there being no plastic combination, unless the heat of the press is kept at a temperature of 100-130° during pressure, and in view of the danger attendant upon such a procedure, this appears highly improbable. If a plastic is formed in the press, it would be futile to endeavor to abstract moisture from such a colloidal mass by means of the presence of hygroscopic agents alone. It is stated that the plastic is given a final immersion in sodium silicate, sodium phosphate, ammonium phosphate, or lead borate, to decrease the inflammability.

The Stains Company Method of Celluloid Manufacture is said to consist in dissolving the ground pyroxylin mixed with the necessary coloring matter, with a solution of two volumes of camphor saturated with alcohol, the water being first removed from the pyroxylin by pressure. After the solvent has permeated the mass, additional alcohol in amount equal to about 50% of pyroxylin is added and incorporated with the mass by stirring. When the mass has attained a gelatinous consistency it is milled under heated rollers to reduce the amount of solvent and produce a plastic which becomes hard when cooled. If this is the method used, it will be noted that it differs in nothing essential from the detailed process previously described.[1]

Plastic Manufacture by Intense Cold. A novel process has been advocated by G. Benjamin of New York,[2] for the preparation of celluloid by means of intense cold, with the object in mind of avoid-

1. According to the expired patent of Magnus & Co. of Berlin, the pyroxylin is dissolved in a solution of 95 parts of ether and 5 parts of alcohol (by volume) in an earthenware crock, which is covered with a rubber top. T. F. Best treats cellulose with nitric and sulphuric acids in the usual way, and then saturates with a solution of sulphurous acid, and heats the mixture in a closed vessel at 38°, until the excess of nitric acid is decomposed. The mass is then neutralized, dried and combined with camphor. According to L. Morane (F.P. 296811, 1901) the nitrated cotton is washed, neutralized, and pressed hydraulically until it contains but 15–20% of water. The still moist nitrocellulose is dissolved, carried through some kind of a purifying apparatus, and into a closed compartment connected on one hand with a ventilator and on the other with a canal containing a series of steam pipes. The temperature and volume of air entering the compartment is regulated, the temperature being at about the boiling point of the solvent. The aspirated air passes through condensing coils whereby considerable of the solvent is recovered. The nitrocellulose solution is forced into minute pipes and these projected into the closed compartment, the nitrocellulose falling to the bottom and a majority of the solvent being volatilized and subsequently condensed. The mass of threads is finally mixed with camphor, and rolled into a plastic mass.

2. U.S.P. 677012, 1901.

ing the possibility of explosion during the mechanical treatment of the materials necessary to their intimate mixing, and also to economize on the amount of solvent used. Instead of the usual process of celluloid manufacture in which a mechanical mixture of camphor and pyroxylin is effected, a suitable liquid solvent introduced, and the mixture subjected to pressure and heat together with hot or cold rolling to remove excess of solvent where a solid is required, Benjamin claims to have found out that where pyroxylin, camphor, and a suitable solvent (say alcohol and ether) are subjected for a sufficient time to the action of intense cold—such, for instance, as may be obtained by means of liquid air, the liquid solvent will be brought to the solid state, and then all the ingredients being solids, they may be intimately ground together with no danger of explosion whatever. It is stated that the constituents, upon regaining the normal atmospheric temperature, will have combined mechanically or coacted to a homogeneous compound, having the form of a solid or liquid, depending on the amount of the original solvent.[1] The author is unaware of this method being used anywhere on a manufacturing scale.

Uninflammable Pyroxylin Plastics.[2] The pyroxylin plastics are inflammable, but not combustible, their heat of decomposition fluctuating within wide limits, due to variations in methods of manufacture, efficiency of stabilizing agents introduced, and the amount and nature of pigment they contain. Pigments, as zinc oxide or carbonate, increase the stability and decrease the speed of burning, from the presence of the incombustible inorganic mass and the alkalinity of the base acting as a neutralizant for small amounts of liberated acids. A great many attempts have been made to decrease or entirely eliminate inflammability from these plastics, and with varying amounts of success. With the rapid growth of the " moving picture " industry, and the safeguards which have been thrown around it by municipal

1. It is recommended to take 1 part of pyroxylin, and subject to the action of intense cold, preferably by immersing the pyroxylin in liquid air from six to ten minutes. Upon withdrawing the frozen pyroxylin it is placed in an ordinary iron mill, the metal of which is kept at a low temperature by means of liquid air, and ground to an impalpable powder. The camphor is then similarly treated. The alcohol-ether solvent (usually from 10–30% of the weight of the pyroxylin and camphor combined and depending on whether a solid, semisolid or liquid finished preparation is desired) is introduced into an open-mouthed jar, and the latter is immersed in liquid air from fifteen to eighteen minutes. The solvent is then ground as described above. All of the ground materials are then intimately mixed while still in the solid state, and set aside in a stoneware vessel to regain normal temperature. Although the camphor and pyroxylin only may be frozen, it is recommended to proceed as above stated, as there is liability of explosion if the camphor and alcohol be warm and the pyroxylin cold.

2. For general articles on uninflammable celluloid, see Hildebrand, Z. Bürsten., 1908, **27**, 594; Gew. Bl. Würt., 1897, **49**, 373; Am. Apoth. Ztg.,' 1898, **18**, 129; Stübling, Celluloid, 1907, **7**, 99; Net. Arb., 1888, **14**, 753.

legislation as the result of disastrous accidents from ignition of the picture films, the problem of reducing the inflammability of these plastics has recently assumed greater importance.

Denitration of the pyroxylin to reduce inflammability—so successful in artificial filaments and silk industries—has not proven satisfactory with plastics on account of the fact that denitrated cellulose nitrate and camphor does not form a readily moldable product, and hence is not "plastic" in any sense of the word.

The methods which have been devised fall naturally into two groups: (1) those which are applicable to transparent plastics, and (2) those in which the reduction in inflammability is due to solid matter introduced, and therefore the finished product is always translucent or opaque. Those of the first group, in general, comprise salts of the halogens with metals which are soluble in alcohol or ether. These include the chlorides, bromides and iodides of mercuric, cupric, cadmium, aluminum, ferric, chromic, nickelous, manganous, manganic, cobaltous, zinc, calcium, magnesium,[1] lithium, ammonium and strontium. In W. Parkin's method, 2 parts of celluloid dissolved in 3 parts of acetone is added to a solution of 1 part of a mixture of equal parts of aluminum, strontium, and magnesium chlorides, dissolved in 2 parts methyl alcohol. The solvents are distilled off and the celluloid obtained in powder form suitable for working up in the usual way.[2] Or[3] celluloid 25 gm. is dissolved in acetone 250 gm., mixed with 50 gm. magnesium chloride in alcohol 150 gm. until a paste is obtained, which, when thoroughly dried, is said to be practically non-inflammable. Ferric chloride[4] is said to be specially efficient, is readily soluble in both alcohol and ether, but possesses the disadvantage that its solutions are of a yellow color. Stannous chloride in ether,[5] calcium and

1. M. Asselot (D.R.P. 93797, 1896) adds an alcoholic solution of magnesium chloride to the celluloid dissolved in acetone.

2. F.P. 344501, 347446, 1904; D.R.P. 171694, 1904; abst. J.S.C.I, 1904, **23**, 1111.

3. E.P. 6389, 1896; see also P. Marino, U.S.P. 893634, 1908; D.R.P. 206471, 1908.

4. A. Mabille & G. Leclerc, F.P. 317884, 1902. To protect from action of moisture and air, it is recommended to treat sheets containing ferric salts with oxalic acid, and those containing calcium salts with sulphuric acid, thus precipitating superficially ferric oxalate and calcium sulphate, the latter being but slightly soluble in water (about 1–400).

5. According to Stocker (E.P. 16330, 1887; abst. J.S.C.I., 1888, **7**, 853; Poly. Notizbl., 1889, **44**, 44) when pyroxylin 100, is mixed with camphor 400, stannous chloride 70, alcohol 100, and after standing twelve hours is led through heated cylinders at 60° and kneaded until entirely homogeneous, a transparent mass is obtained which is known as "Stocker's Unburnable Collodion" and which can be worked up directly. It is claimed that the mass burns only when placed in a direct flame and is immediately extinguished on removal, with glowing. For various colors, cupric chloride for green, ferric chloride for yellow or brown, manganous chloride for pink, cobaltic chloride for rose, and chromic and nickel chlorides for grass green, may be added and at the same time reduce the inflam-

aluminum chlorides in alcohol,[1] zinc chloride,[2] cadmium iodide, zinc oxalate, sodium tungstate, hexachloronaphthalene,[3] metallic chlorides with carbon tetrachloride,[4] methyl-, ethyl-, and amyl-silicates (so-called silicic ethers)[5] in alcoholic solution, and phenyl-, cresyl-, and naphthyl-carbonates[6] and phosphates[7] are among other compounds which have been claimed as efficient. The general method of introducing the halide or other alcohol-soluble body, is with the alcohol used to assist the conversion of the pyroxylin by the camphor in the regular process of plastic manufacture. It must be remembered that a large number of these salts are decidedly deliquescent (calcium and magnesium chlorides, cadmium iodide, ferric chloride) and hence added in excess have a tendency to "ooze" or come to the surface of the plastic and produce a moist, sticky feel and a dirty appearance. All heavy metal chlorides, bromides, or iodides soluble in alcohol,

mability. To prepare uninflammable substitute for celluloid according to L. Labbé (F.P. 410973, 1909) 100 gm. of pure cotton are treated for ten minutes with a mixture of 950 cc. of nitric acid (sp.gr. 1.457), 2500 cc. of sulphuric acid (sp.gr. 1.845) and 750 cc. of water, the temperature of the mixture being kept below 60°. The cotton is then thoroughly washed, dried in air and mixed with enough glacial acetic acid to form a thick paste. A second paste is prepared by treating gelatin at 40° with a 10% solution of magnesium acetate, expressing the excess of water and then adding glacial acetic acid to the remaining mass until the mixture has the same consistency as the first paste. Equal volumes of the two preparations are mixed at 40° and a supersaturated alcoholic solution of tin protochloride is added till the mixture has the consistency of a thick syrup. After settling the clear supernatant liquor is decanted off and can be used for the preparation of either films or moulded articles by allowing the solvent to evaporate.

1. W. Parkin and A. Williams, E.P. 8301, 1901; 28212, 1903; 22381, 1904; 26657, 1909; F.P. 347446, 1905; abst. J.S.C.I., 1905, **24**, 344; T. Casson associated in E.P.28212; see also H. Beau, F. P. 322457, 1902.

2. J. Stevens, U.S.P. 612066, 1898; W. Stevens, E.P. 4390, 1908, with or without sodium carbonate; P. Prost and E. Michey, F.P. 351555, 1904; First Addition dated Mar. 18, 1905, abst. J.S.C.I., 1905, **24**, 855; the finished article is treated with alkali carbonate or silicate to precipitate a superficial layer of metallic carbonate or silicate and thus decrease action of moisture.

3. K. McElroy and C. Ellis, U.S.P. 914300, 1909. See C. Trocquenet, F.P. 362989, 1906, and H. Manissadjian, E.P. 27201, 1908; F.P. 397429, 1908; abst. J.C.S.I., 1909, **28**, 812.

4. S. Assadas, E.P. 9982, 1908; F.P. 387537, 1907; abst. J.S.C.I., 1908, **27**, 873; adding to 1 k. pyroxylin, colophony (25–200 gm.), stannous chloride (200–400 gm.), ammonium chloride (5–50 gm.), and carbon tetrachloride (5–50 gm.). "Metallodion," formed by mixing oxides or salts (lead peroxide), carbon and nitrocellulose; and "metallodium," consisting of amido-cellulose (from reduction of nitrocellulose) salts and carbon, are uninflammable combinations of H. Aron, E.P 2943, 1882.

5. L. Pillion, D.R.P. 149764, 1902. These silicates are soluble in ethyl alcohol. E. Clement, F.P. 402569, 1909, recommends tetraethyl monosilicate, diethyl monosilicate, hexaethyl disilicate, or ethyl disilicate for the same purpose, these being obtained by the partial hydrolysis of the normal silicic esters, all of which are claimed as compatible with pyroxylin in solution. In D.R.P. 214398, 1908; F.P. 408406, 1909; abst. J.S.C.I., 1908, **28**, 1221, B. Buchstab, described the preparation of a difficultly combustible mass by treating a solution of nitrocellulose with air or oxygen, and working in strontium chloride, castor oil, and lactic acid.

6. E. Zühl, U.S.P. 700884, 1902.

7. E. Zühl, U.S.P. 700885, 1902.

are more so in water, and plastics containing them are therefore not adapted for exposure to the elements on account of water abstracting the halides and giving to the plastic an uneven and pitted appearance. In nearly every instance this may be remedied by a final dipping in a pyroxylin lacquer, which forms a non-porous and impervious coating, the celluloid so treated losing none of its properties of pliability or transparency. For lowering the combustibility of transparent plastics, calcium and magnesium chlorides, or account of their ready solubility in alcohol and low cost, are more often used. In many instances the presence of the halogen radical unfits the plastic for certain uses as in photography, on account of the action of the halogen on the silver salts. An additional advantage in employing the heavy metal chlorides, bromides, and iodides is that in combination with ethyl alcohol they form excellent pyroxylin solvents, and materially lower the temperature of conversion in conjunction with camphor. Furthermore, it has been stated that with calcium chloride and alcohol, a smaller proportion of camphor may be used, thus reducing the amount of the most costly ingredient of pyroxylin plastics. Another method proposed to obviate the action of moisture on plastics containing deliquescent salts, as calcium chloride, is to veneer the plastic with thin sheets of celluloid containing no halide, and thus effectually protect it from the influence of the atmosphere and moisture. In practice the bromides and iodides are seldom if ever used, the chlorides being equally efficient, less expensive, and there is no tendency to decomposition and discoloration upon exposure to light as with many bromides and especially iodides. At one time cadmium iodide was used considerably, but its use has, it is understood, been abandoned.

If 4 parts of a supersaturated solution of magnesium sulphate be treated with 2.5 parts of amyl acetate containing 1 part camphor, and 1 part nitrocellulose be added, the latter dissolves, and the solution floats on the top of the aqueous layer.[1] The whole is then thoroughly incorporated together, and the celluloid produced in sheets under the action of heated rolls. The celluloid obtained in this way is stated to be uninflammable, and at the same time transparent. According to G. Woodward's process,[2] celluloid is rendered unin-

1. H. Lagneau, E. Nebel, and M. Vignes, F.P. 360912, 1905. Nitronaphthalin has of recent years acquired considerable importance owing to the fact that its presence in nitroglycerol renders the latter practically non-sensitive to concussion, while even a small admixture prevents dynamite from freezing. It also materially increases the solvent action of nitroglycerol on nitrocellulose (W. Krug and J. Blomen, J.A.C.S., 1897, **19**, 532). It has been suggested as an ingredient in pyroxylin plastics to render them incombustible.

2. U.S.P. 803952, 1905; E.P. 9277, 1904; F.P. 344048, 1904; D.R.P. 171428, 1904; Aust. P. 23151; abst. J.S.C.I., 1904, **23**, 1111; Sci. Am., Feb. 17, 1906. To each k. celluloid is added 1.5 k. fish glue, 400 gm. gum arabic, 100 gm. gelatin, and

flammable by mixing with fish glue, gum arabic, gelatin and rape oil. By another method[1] the celluloid is dissolved in acetone, methyl alcohol, or other solvent. To this solution are added, in acetic acid solution, metallic salts which are insoluble in water and alcohol. Twenty-four suitable salts are mentioned, including barium phosphate, calcium arsenite, basic lead nitrite, and ferric phosphate. The proportions used are 3 parts of metallic salts to 15 parts of celluloid. Carbon tetrachloride, trichloronitromethane and a nitrohydrocarbon are then added, and the mixture allowed to stand for twenty-four hours in a closed vessel to complete the reaction. A solution of formaldehyde is now added and left in contact with the mixture for ten hours. At the end of this time the celluloid forms a compact mass on the surface of the liquid, and is then removed, dried, and worked up into the desired form. The plastic of L. Béthisy[2] contains no camphor, the pyroxylin being dissolved in oil of lavender or aspic,[3] the mass then being subjected to the action of a mixture of acetic acid, ether, acetone, amyl acetate and solution of *Unona selanica*. A final treat-

40 gm. colza oil. The solution of fish glue is prepared by allowing 200 gm. to swell for forty-eight hours in 1 l. cold distilled water, passing through a sieve to remove all lumps, 10 gm. salt being finally added.

1. P. Marino, U.S.P. 893634, 1908; E.P. 5891, 1907; F.P. 376399, 1907; D.R.P. 206471, 1907; abst. J.S.C.I., 1907, **26**, 989.

2. U.S.P. 894108, 1908; F.P. 368004, 1906; abst. J.S.C.I., 1906, **25**, 1231. The pyroxylin after neutralization of the nitrating acids and still containing 40–45% water, is introduced into "nut-grinding mills" with successive "falls"; at the first "fall" the nitrocellulose is reduced to pulp. Then about 5% by weight of a liquid hydrocarbon, preferably of essential oil of aspic or its chemical substitute, is added.

The tetranitrocellulose having been ground with 40–45% of water, the latter is then removed by pressing the mass into thin cakes in a hydraulic press. These cakes are then crushed into very fine pieces and moistened with a solvent of the following composition: Crystallizable acetic acid, 0.8. k.; sulphuric ether, 20 k.; acetone, 20 k.; amyl acetate, 15 k.; alcohol, 15 k.; solution of *Unona selanica* at 10%, 8.2 k. The above proportions correspond to the moistening of 100 k. of crushed cakes. For preparing the solvent in question, the operation is as follows: 0.85 k. of *Unona selanica* are dissolved in 7.75 k. of sulphuric ether, and the mixture is stirred from time to time during twenty-four hours and then filtered. The ether, acetic acid and acetone are mixed together, then after having stirred this mixture from time to time for a period of twelve hours, the solution of *Unona selanica* and sulphuric acid, prepared separately, is added to it. Then the process is as follows: The whole of the amyl acetate is poured into a vat, whereupon the pulverized pulp is added to it, left to stand for about six hours, and then stirred. The preparation of *Unona selanica*, sulphuric ether, acetic acid and acetone, previously prepared, is then added and the whole again left to stand for about six hours. Finally, the alcohol is poured in, and the whole introduced into a stirring device, a paste being obtained which is left to stand for at least twenty-four hours in a warm place.

The paste is then cut up and rolled between two cylinders heated to about 60°. When it has reached a suitable degree of consistency, the cylinders are cooled and the following substance poured on the paste: boric acid 50, sulphuric acid 10, calcic alcoholate at 75% 100, ammonium sulphocyanide 40 parts (all by weight). In D.R.P. 110012, 1901, Béthisy decreases the inflammability by the use of gelatin, vaseline, and zinc chloride in ether.

3. E.P. 11927, 1898.

ment with boric acid in ether is given. P. Germain,[1] incorporates some salt which does not support combustion, i.e., sodium bicarbonate.

Peyrussen,[2] Blancpin,[3] I. Kitsee,[4] D. Bachrach,[5] Claus,[6] C. Troquenet [7] and others [8] have devised processes to accomplish this same purpose. In the usual method of plastic manufacture, the alcohol-soluble ingredients are added with the alcohol used to assist the pyroxylin conversion, and the pigments, in general, are incorporated with the pyroxylin before conversion.

1. F.P. 349292, 1904. In order to decrease the porosity due to the water-soluble bicarbonate, the mass may finally be dipped in acetone, which dissolves the plastic superficially, and thus covers it with a thin non-porous layer.

2. F.P. 374375, 1906. The ricinates and ricinoleates of lead, aluminum, and zinc, all of which are soluble in alcohol.

3. F.P. 364690, 1906. 10 k. nitrocellulose are dissolved in known solvents, castor oil, camphor and alcohol being added in amounts of 0.5–1.2 k., together with sulphuric acid, 66° Bé., 0.3–1 k., calcium and manganous chlorides each 0.5–1 k., and carbon tetrachloride 1050. gm. Insoluble calcium sulphate is precipitated, which with the free HCl liberated constitutes the non-combustible portion.

4. U.S.P. 900744, 1908. "Asbestos flour," melted sulphur, and ammonium sulphate is milled with the nitrocellulose until a homogeneous mass is obtained. The mass is finally "vuleanized" at 150–200°.

5. U.S.P. 667759, 1901; 743422, 1903; E.P. 22970, 1903; producing calcium sulphate in the plastic mass by interaction of calcium chloride and sulphuric acid.

6. E.P. 3072, 1882; abst. J.S.C.I., 1882, **1**, 201. Equal weights of pyroxylin with zinc or lead oxychloride, the salt being finely powdered and anhydrous.

7. E.P. 8167, 1906; F.P. 362989, 1906. Cellulose of aquatic origin (seaweed or lichens) 55–75%, oiled asbestos 2–15%, and oyster shells 20–45%. The product is kneaded in water and formaldehyde 8–14% added. The paste is then dried and compressed.

8. S. Hoggson and G. Pettis, U.S.P. 245952, 1881, recommend aluminum sulphate or steatite in fine powder; G. de Brialles, E.P. 8542, 1908, mechanical combination with gelatin, (preferably) chondrin; Cadoret and Degraide (E.P. 21485, 1892; abst. J.S.C.I., 1893, **12**, 779) add "camphogine," which is obtained by decomposing turpentine by HCl gas, adding zinc, and boiling with an alkali, when complete incombustibility, it is claimed, is obtained; Béthisyes Rose, F.P. 347303, 1904, whose process is described as follows: Cellulose, 3, is acted upon by a mixture of nitric acid of 42° 24, and sulphuric acid of 66° Bé., 56. This mixture is allowed to react for twenty-five minutes, is then washed, dried, etc., and bleached with a mixture of calcium chloride 100 k., aluminum sulphate 60, magnesium sulphate 23, and water 2000 l. A solution of citric acid (citric acid 50 and alcohol of 90% 100) 20, and oil d'aspic 5, is introduced into a ground mixture of crystallized zinc chloride 75. This is finally dissolved in: Amyl acetate 2,700, ether 15, alcohol of 90% 7500, crystallized acetic acid 800, calcium chloride dissolved in its own weight of alcohol of 90% 20. C. Hagemann and T. Zimmerman, (U.S.P. 657535, 1900; D.R.P. 99577, 1900) dissolve wet nitrocellulose (containing about 50% water) in acetone to a semifluid mass. A concentrated aqueous solution of a salt of a metal—as, for instance aluminum sulphate—is gradually incorporated with the mass by trituration or kneading, to obtain a homogeneous and transparent plastic. An alkali, as caustic soda, is then gradually incorporated with the compound until neutralization—which can be readily seen by the fact that the mass becomes suddenly crumbly and friable, aluminum hydroxide being precipitated—has been completed, the product being known in this state as "hydrocellite." This consists essentially of aluminum hydrate, sodium sulphate, nitrocellulose and water. The sodium sulphate is removed by washing, the mass dried and incorporated with camphor to form a commercial, workable plastic. One point of advantage of this material is that the density and degree of hardness may be varied within wide limits, and that the drying is fraught with no danger.

Formation of Plastic Rods and Tubes was first successfully made by the patented process of I. and J. Hyatt[1] in which they

1. This process (U.S.P. 133229, 1872) which is practically the commencement of the modern art of celluloid manufacture, is thus described by the Hyatts: Our invention consists, first, in the method or process of drying the prepared mixture of soluble cotton and camphor by first compressing the moist pulp into thin cakes of about $\frac{1}{4}$–$\frac{1}{2}$ inch in thickness, and arranging these cakes in a pile with intermediate layers of paper or other absorbent material, and subjecting the pile to pressure in a hydraulic or other suitable press, by which the material is uniformly relieved of its moisture, while the compression of the material and exclusion of the air prevent all danger of the ignition of the material, which, from its inflammable nature, is rendered more or less liable when it is exposed to the sun or to the heated air of a drying-room; second, in the process of manufacturing celluloid by the use of camphor or other solvent which becomes active under heat and pressure, the subjecting of the mixture of pyroxylin and solvent to pressure by means of a plunger in a heated cylinder provided with a discharge nozzle or pipe, the cylinder being of sufficient length to cause the conversion of the pyroxylin to take place while the material is being gradually forced through the cylinder, so that by replenishing the cylinder as it becomes partially empty a gradual discharge of the celluloid or converted material is effected in the form of a continuous rod, bar, or sheet; third, subjecting the pyroxylin and solvent to pressure by means of a plunger in a cylinder unequally heated in such a manner that the mixed material will be first compacted in the colder portion before the solvent is melted and the process of transformation commences, whereby the air is allowed to more freely escape and is more completely expelled, while the conversion of the pyroxylin is effected in another and hotter portion of the cylinder as the mass is forced through it; fourth, in the arrangement of a cold-water jacket around the upper portion or receiving end of the heated converting cylinder, so as to prevent the melting of the solvent and the partial conversion of the pyroxylin before it has been properly compressed, as the premature conversion of the pyroxylin in this end of the cylinder would operate to prevent the free escape of the air during the compression of the mass; fifth, in the combination, with a converting cylinder provided with a cold-water jacket around the receiving end, of a steam or hot-water jacket arranged around the lower portion or discharge end, for melting the camphor and facilitating the transformation of the pyroxylin before it is discharged from the cylinder; sixth, in the arrangement, with the cold-water jacket of the converting cylinder, of the escape pipe of the hydraulic engine, which supplies water to the water jacket; seventh, in the arrangement, with the upwardly projecting piston rod of the hydraulic engine and the supply and escape pipes of two three-way cocks, intermediate lever, and connecting rod and arm for operating the valves; eighth, in the arrangement, in the discharge end of the converting cylinder, of a central heating and distributing core constructed with radial pins or projections, whereby the material, before it escapes from the cylinder, is forced to pass through the annular space around the central core and in contact with the heated surface of the cylinder, while the spurs or pins divide and mix the material, and at the same time serve to conduct the heat from the cylinder to the central core; ninth, in the combination, with the discharge pipe through which the transformed material is forced from the converting cylinder, of an equalizing warm-water vessel through which the extended discharge pipe passes, the water keeping the pipe sufficiently warm to prevent the inner surface from cooling the material in contact faster than the central portion, as the unequal cooling and consequent unequal consistency of the different portions of the material will cause the central and softer portion to move faster than the outer and harder portion, and thereby destroy the homogeneousness of the mass and render the surface of the stick or rod, as it is ejected from the pipe, rough and broken; tenth, in the combination, with the hydraulic engine, converting cylinder, and celluloid-discharge pipe, of a mold and hydraulic clamp for holding the mold together while it is being filled with the celluloid.

The pyroxylin is first ground in a wet condition and the excess of water expressed. The camphor and pigments are then thoroughly incorporated by means of mixing rollers. The compound thus prepared is conveniently formed into cakes by means of a mold and follower, the bottom of the mold being made separate,

described a stuffing machine for the production of rods and tubes. Their apparatus, illustrated in Figs. 172, 173, although old in years, embodies in its essential chracteristics the mechanical ideas of the stuffing machines used at the present time for this purpose. The operation of this machine is as follows: The pyroxylin and solvent, with or without other ingredients, either before its conversion, in the condition in which it is taken from the drying-pile, or in pieces or scraps of the previously transformed or partially transformed material,

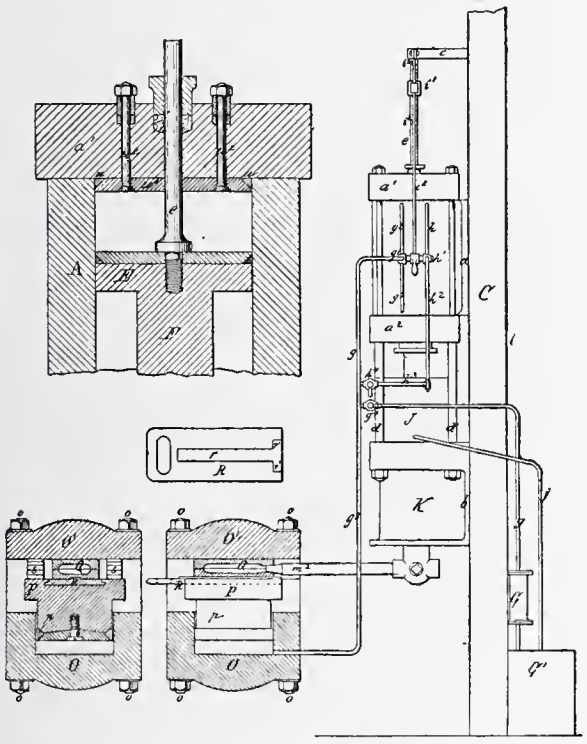

FIG. 172.—The Hyatt Apparatus for Manufacturing Pyroxylin.

are placed into the converting or stuffing cylinder, water let into the upper end of the engine by depressing the lever, as shown in Fig. 172, which causes the piston and follower to descend slowly, the supply

and serving as a means for transferring the formed cake to the pile. These cakes are preferably made of a size about 12 in. square and from $\frac{1}{4}$–$\frac{1}{2}$ in. in thickness, as it would be quite difficult to properly absorb the moisture from a cake of much greater thickness. These cakes are laid up in a pile, with a suitable layer of unsized or blotting paper or other suitable absorbent material placed between them. The pile thus formed is subjected to considerable pressure in a hydraulic press, which causes the intervening layers of the paper or other material to sufficiently absorb the moisture from the compound. During this process the compound is protected from the air, thus preventing the evaporation of the camphor, and also all liability of ignition of the material. The rapidity with which the drying is effected results in a saving in time and amount of space required. The material when dried is ready for conversion into celluloid. See also Powder Presses, Chapter XVIII.

pipes being made small for the purpose, so as to allow sufficient time for the heating of the contents of the cylinder and the conversion or softening before it is forced out. The water jacket keeps the material cool until it has been compressed into the lower portion of the cylinder and the air allowed to escape. In the lower portion of the cylinder the heat from the steam jacket melts and renders active the solvent of the pyroxylin or redissolves and agglomerates the scraps of the previously converted material, when the contents are gradually

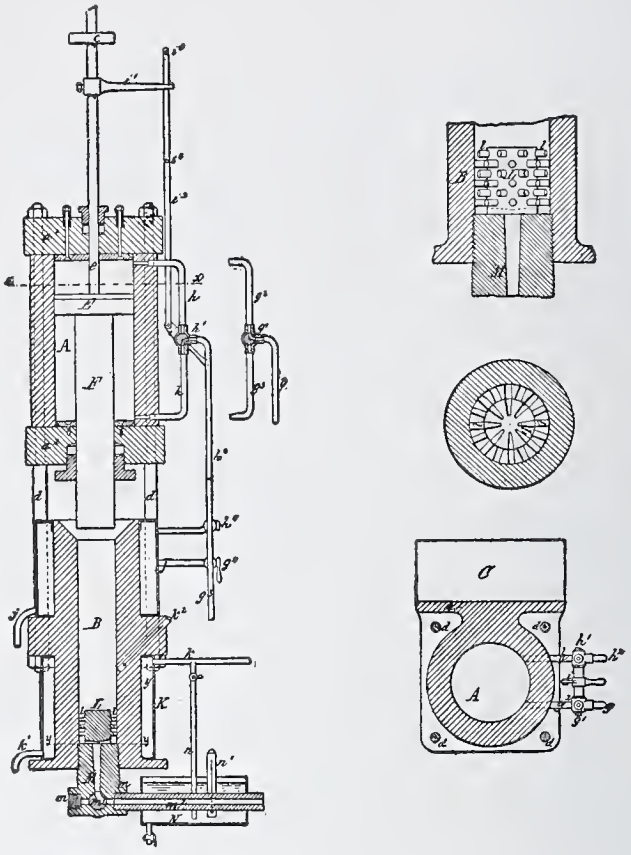

FIG. 173.—Hyatt's Apparatus for Manufacturing Pyroxylin.

forced through the annular space around the core *L*, among the pins, which thoroughly divides and mixes up the mass and brings every portion in contact with the heated surface of the cylinder core, thereby insuring complete transformation and a homogeneous compound. The celluloid is now forced through the discharge nozzle into the pipe mold *m*,[2] maintained at suitable temperature by the liquid of the equalizing vessel *N*, from which it may be discharged in the form of a bar, sheet, or stick, according to the shape of the bore of the pipe.

Instead of forming the celluloid into bars or rods, the material may be forced from the discharge pipe or nozzle with or without the interposed equalizing warm-water vessel, directly into a mold of the form of the article required to be produced. In such case the water is turned on the hydraulic press at the same time it is on the engine, so that the follower will have been elevated sufficiently to clamp the parts of the mold together by the time the material begins to enter. The area of the piston of the press should be sufficiently large to prevent the pressure from the engine forcing the mold apart. The mold being filled, the cocks g^4 and h^4 are reversed, shutting off the supply of water from the force pump G and opening the escape from the engine and the mold clamp, whereby the hydraulic piston is arrested in its movement and the piston and follower of the mold clamp permitted to descend and the mold to be withdrawn and another one substituted. Water is again led into the press, so as to clamp the mold together, when the engine is again started and the second mold filled, and so on, until the stuffing cylinder is nearly exhausted, when the engine is reversed, the converting cylinder refilled, and the process repeated.

By means of this method celluloid was first made in commercial quantities in the form of rods and tubes.[1]

In the process of W. Carpenter [2] the dies or molds are formed with hollow backs for the circulation of the heating and cooling fluids, conical holes are forced in the molds for venting, and a pressure gauge is connected with the interior of the molded article. The invention is applicable to the molding of dolls' heads, vases, and articles of irregular shape, and is shown in Figs. 174, 175, as applied to the molding of ladies' powder boxes, three of which are shown connected as molded. They are provided with bottoms afterward by a separate treatment.

The process of making a hollow article with this mechanism is as follows: The dies are separated and the cock h' opened to admit hot fluid, which circulates behind the backs of both dies and passes out at the waste pipe w. The tube b, from which the object is to be molded, is used of cylindrical, tapering, or any desired shape that can be produced without the aid of apparatus, and is adapted to nearly fit the apertures t t' at the top and bottom of the dies. The elastic stopper is inserted in the bottom of the tube and the mandrel f placed upon it, with its upper end extending nearly to the top of the tube,

1. See "Manufacture of Hollow Celluloid," Cell. Ind., 1908, 8, 71. For "Manufacture of Umbrella and Other Handles from Celluloid," see Z. Dreehsler, 1902, 25, 336.

2. U.S.P. 237168, 1881; for process and apparatus for mounting pyroxylin upon a mandrel, see J. Edson, U.S.P. 350049, 1886.

which is then put in its place in the press and the dies closed upon it. The plug *G* is then forced into the upper end of the tube by its screw *D*, and the force employed is not sufficient to make a water-tight joint at the point of contact, so that the fluid introduced through the pipe

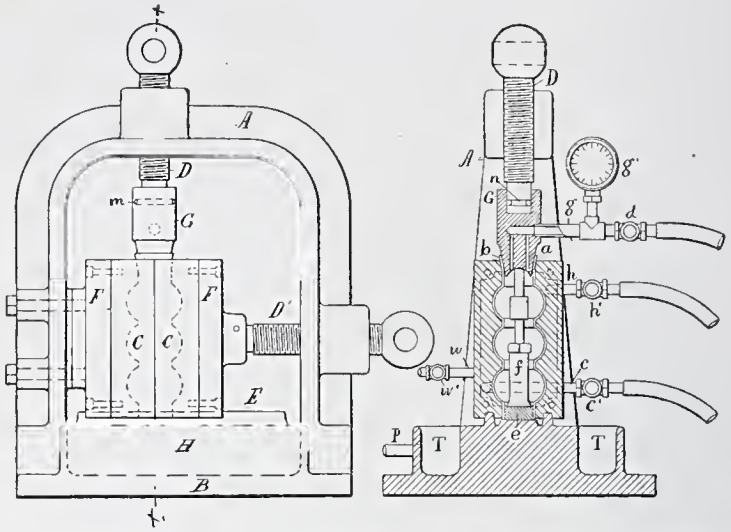

FIG. 174.—The Carpenter Apparatus for Molding Hollow Celluloid Forms.

g is at liberty to escape and make room for a fresh supply. The shape of the stopper *e* also permits the circulation of the steam or hot water introduced through the whole length of the tube by allowing a leakage at the bottom joint. This leakage at top and bottom of the tube is

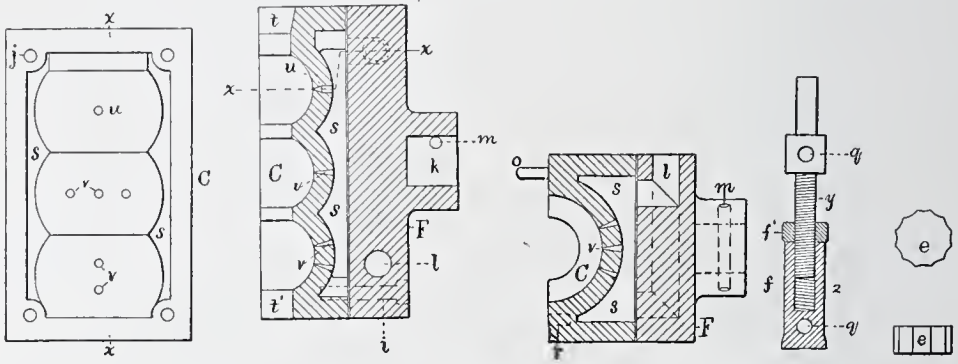

FIG. 175.—Hyatt's Apparatus for Manufacturing Pyroxylin.

caught in tanks *T*, applied to the sides of the bed *B*, and shown in the drawings as cast in one piece therewith, a pipe, *P*, conducting the liquid to a sewer, as desired. The tube is thus heated and softened simultaneously with the heating of the dies, and the plug *G* is then forced down farther into the tube to close the same tightly at the top by its conical shape, and at the bottom by the expansion of the

elastic stopper *e* under the pressure exerted upon the top of the mandrel *f*. To secure the right adjustment of this mandrel it is constructed with a threaded socket, *z*, near the bottom and insert therein a screw, *y* (see Fig. 175), provided with a jam-nut *f'*. By inserting a rod in the holes *q*, formed in the screw and socket *z*, the length of the mandrel can be altered to suit a great variety of dies and adjusted

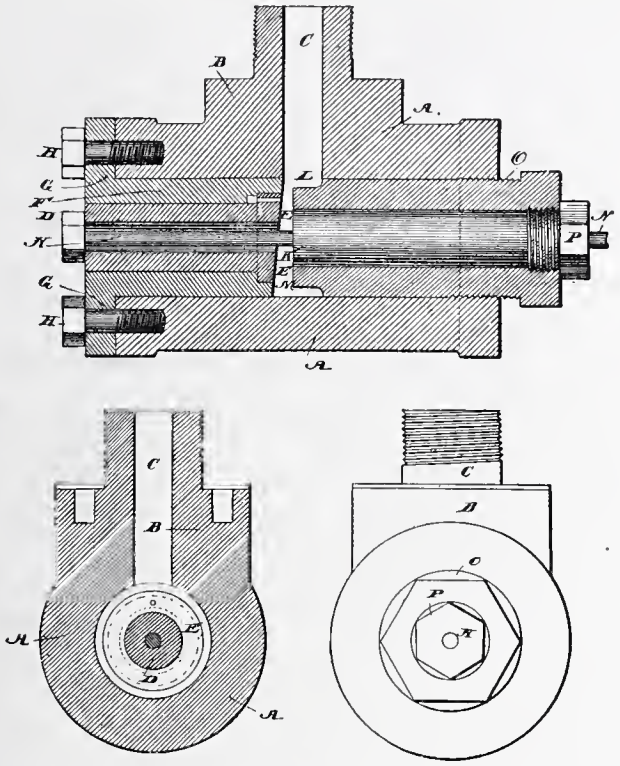

FIG. 176.—The Edson Nozzle for Making Celluloid Rods and Tubes.

to suit the wear of the stopper *e*, which is preferably made of india-rubber.

The pipe *g* is preferably connected with a steam boiler, as the primary heat and ultimate pressure required are thus secured without the use of a force pump, and the boiler pressure is thus exerted in the tube *b*, when its ends become water-tight.

When the gauge *g'* indicates that the pressure reaches the maximum desired, the cock *d* is closed and the circulation in the backs of the dies changed from hot to cold, to harden the molded article while under tension.

In the J. Edson[1] process for making celluloid rods and tubes, the invention consists in forming a peculiar kind of chamber or recess

1. U.S.P. 277694, 1883.

in the body of the nozzle for receiving the material from the press and so distributing it that equal quantities and equal densities will be given to the rod or tube, as shown in Fig. 176.[1]

The A. Olszewski machine[2] shown in Fig. 177, and having for its object the rapid conversion or reconversion of celluloid and at the same time forming the material into rods, bars, and tubes,

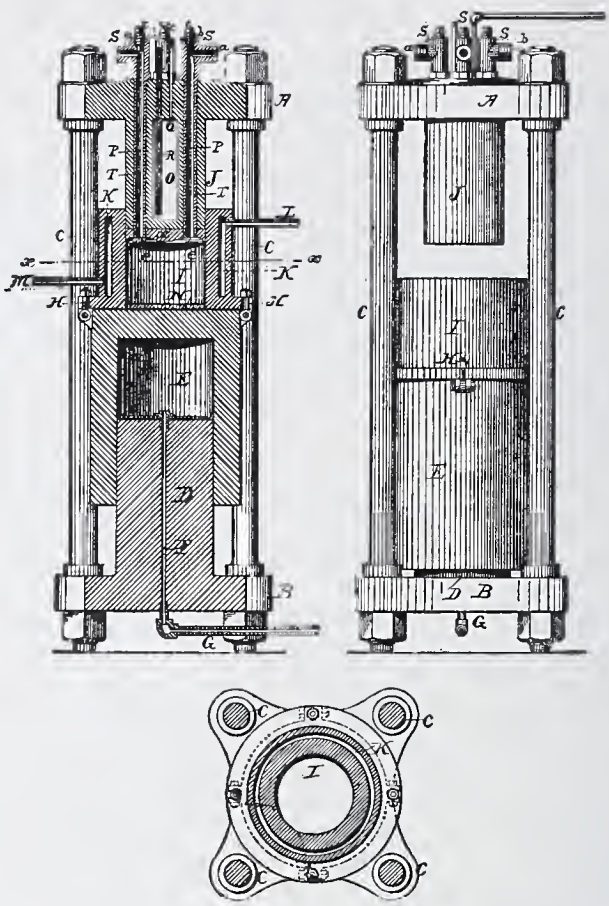

Fig. 177.—The Olszewski Machine for the Rapid Conversion of Celluloid.

1. The nozzle proper is at *D*, of the cylindrical form, and bored to suit the size of the rod or tube to be made, and it is held in position by a flange at *E*, on its inner end, which fits into a recess in a sleeve, *F*, which is inserted in the body *A*, and is held by an external flange *G*, firmly fastened to the body *A* by screw-bolts *H*. The inner end of this sleeve *F*, and also the inner end of the nozzle tube are beveled, as shown, to form a larger space opposite the tube *C*, where the material is forced toward the nozzle, or between the plug *K* and the end of the nozzle cylinder. The inner end of the plug *K* may also be chamfered, as shown at *L*, so that the material, as it is forced in from the press, will easily move around the end of the plug, and thus fill the cavity or chamber *M*, and which will serve as a reservoir to fill the nozzle when a rod is to be formed, or to equally surround the core at *N* when a tube is made. The size of this chamber may be varied by adjusting the plug *K*, which is made with a screw at *O* to fasten it into the body *A*.

2. U.S.P. 280659, 1882.

admits of very rapid and economical work. In the operation of the invention the cylinder *E* is first allowed to lower upon the piston *D*, which carries the material cylinder *I* from below the lower end of the plunger *J* to the position indicated in Fig. 177. The material is introduced into the upper end of the material cylinder *I*, the steam or other heating agent having been admitted to the chamber *K* and the water to the pipe *G*, whereby the cylinder *E* is caused to ascend and carry the material cylinder upward to the position indicated in which position the plunger *J* (which has become heated by the passage of steam or other heating agent through it) will have entered the cylinder *I*, and will bear against the material, and by reason of the pressure against it, the heat in the cylinder and plunger, and its movement through the passages *P*, the same will become plastic and be converted or transformed into a solid homogeneous mass and dis-

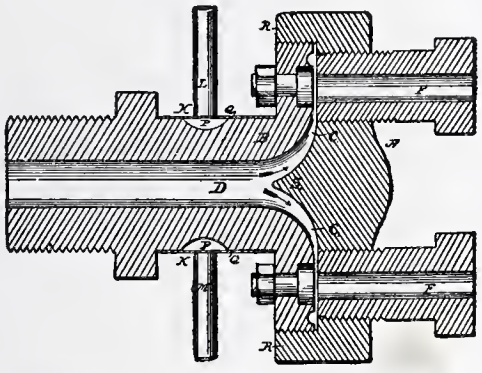

Fig. 178.—The Olszewski Apparatus for Producing Plastic Rods or Tubes.

charged from the nozzles *S*. After a large proportion of the material has been forced from the machine through the passages *P* the cylinder *E* is allowed to lower again, an additional charge of material placed in the cylinder *I* and the operation repeated.

Where a number of rods or tubes are to be formed simultaneously from one supply chamber, the celluloid may be compressed by means of a hydraulic ram as illustrated in Figs. 178–180, the device shown being capable of producing six tubes at one time.[1] The supply pipe *D* having been connected with the supply chamber, the material is forced into the pipe by a hydraulic ram, the effect being that the material will flow into and fill every part of the chamber *C*, and finds its way through all of the nozzles *F* simultaneously, forming around the rods *G* and issuing in the form of tubes.

In the manufacture of rods and tubes according to the more recent G. Gillmore's process[2] the mechanism can be so arranged as to

1. Process of A. Olszewski, U.S.P. 278667, 1883. 2. U.S.P. 655706, 1900.

produce mottled effects in bars and hollow articles in imitation of tortiose shell, mottled amber, marble, and mosaic. This is possible from the fact that the passage of the material consisting of two or more different colors through the machine tends to produce a streaked or

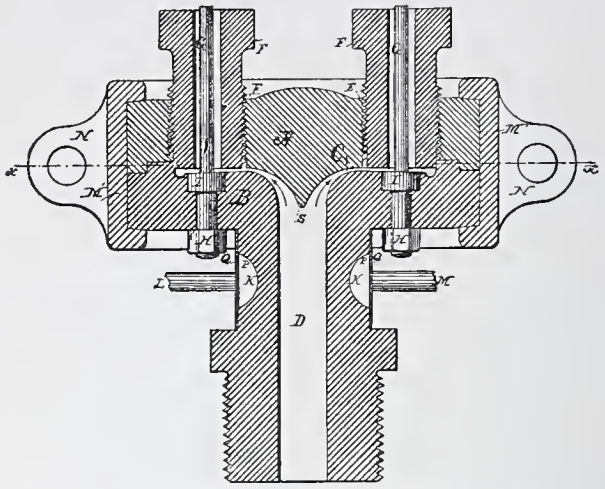

Fig. 179.—The Olszewski Apparatus for Producing Plastic Rods or Tubes.

stratified effect due to the friction encountered. Before this time it had been necessary in making rods to first prepare the mottled material in sheet form, then cut it into strips and subsequently round off the corners, thus entailing considerable waste of time and producing crude material which had to be again reworked. Gillmore's process,

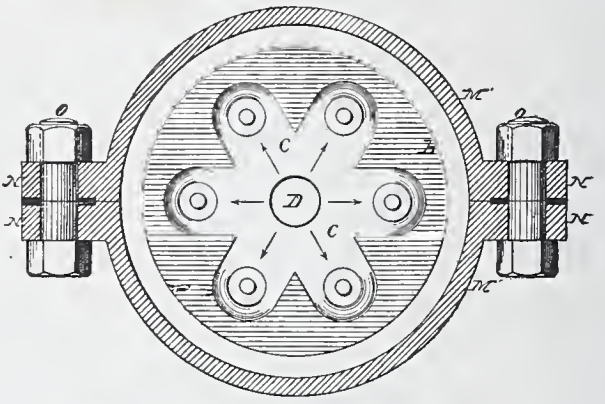

Fig. 180.—The Olszewski Apparatus for Producing Plastic Rods or Tubes.

shown in Figs. 181–183, apparently obviates these disadvantages to the manufacture of mottled material in a stuffer. It consists in providing the stuffer near the nozzle with a cutter which cuts off the material in a direction transverse to the line of flow, and thus breaks it up to produce a mottled effect instead of a striped or stratified appearance.

The operation is as follows: The stuffer being arranged to operate in the usual manner the material, consisting of two or more differently

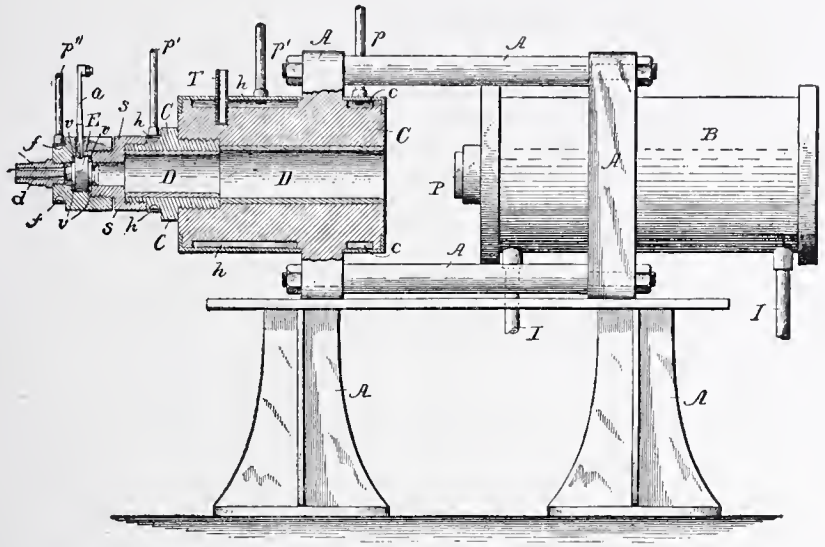

FIG. 181.—The Gillmore Stuffing Machine for Manufacturing Pyroxylin Rods and Tubes.

colored components, is introduced into the rear of the barrel *D*. The "charge" may be composed of two differently colored sheets rolled

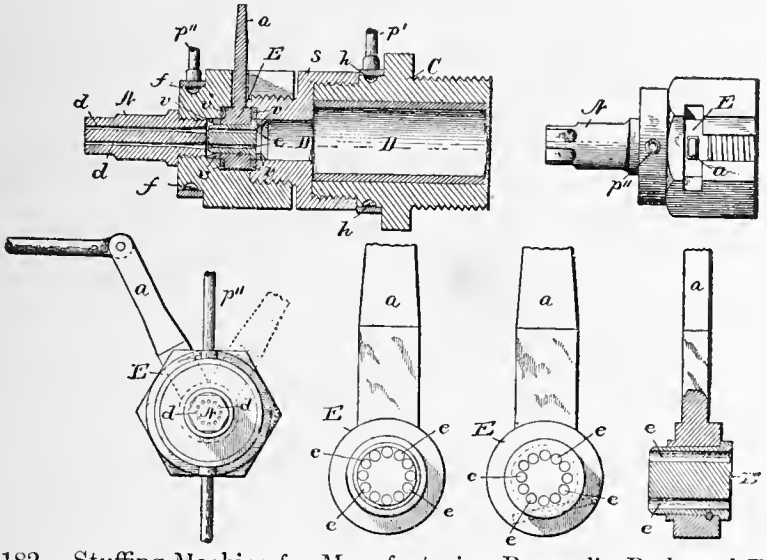

FIG. 182.—Stuffing Machine for Manufacturing Pyroxylin Rods and Tubes, according to Gillmore.

upon each other into the form of a cartridge, or the sheets may be fastened together and then cut into small blocks of regular or irregular shape; or, preferably, each sheet is cut into small pieces and the dif-

ferently colored pieces then intermingled thoroughly and introduced into the barrel in a quantity sufficient to form a charge. The plunger *P* then advances, pressing the charge before it through the narrowing barrel *D* until it encounters the rotating disk *E*, at which time it is in a plastic condition. It then enters the bores in the disk *E*, whereupon it is cut at intervals by the partial rotation of this disk. This cuts and breaks up the material, so as to produce the desired mottled effect and prevent streaks and striations. The material thence

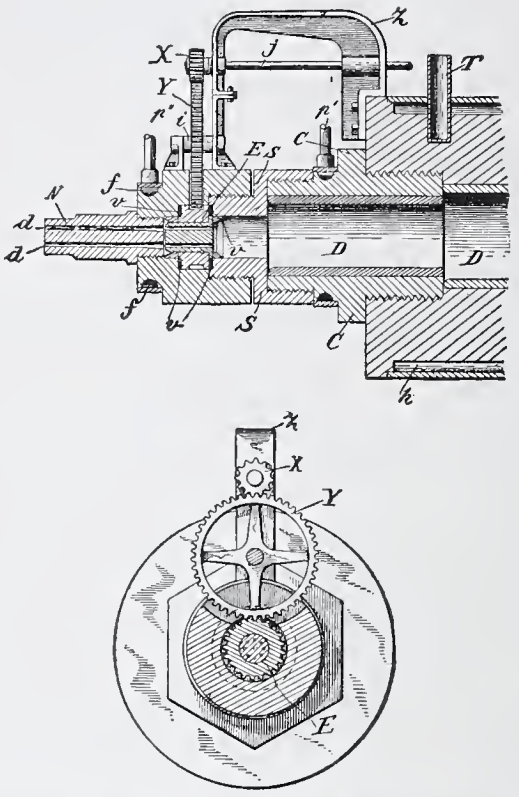

Fig. 183.—The Gillmore Stuffing Machine for Manufacturing Pyroxylin Rods and Tubes.

passes from the bores in the rotating disk *E* into those in the nozzle *N* and emerges in the form of mottled rods or tubes.

A great many materials, such as wood or other fibrous substances not capable of sustaining the pressure of dies and rolls, or tubes or other analogous structures, are liable to collapse under pressure. J. Hyatt [1] has perfected a method, as shown in Fig. 184, which enables wood and other fibrous materials, to be covered with celluloid. It is also intended to cover cores composed of material that is liable to

1. U.S.P. 204228, 1878.

warp or swell in the course of seasoning, it being particularly applicable to the covering of wood cores, such as the handles of whip-stocks, parasols, umbrellas, and other structures of an analogous outline, although it may be successfully applied to cores the diameters of which are at all approximate.

The operation of the invention is as follows: The material is expelled over a mandrel placed at the nozzle of a stuffing machine, so that the composition exudes in a tubular form. The core is coated with a suitable lubricant, to prevent friction between the material and the core, which is firmly held, so that it shall enter the tube as it exudes over the mandrel while the stuffing machine expels it, the progress of the tube over the core being assisted by the hands. After the tube has covered the core a suitable distance, it is cut off, and the material allowed to dry upon the core, in which process it shrinks with great tension, and remains immovable.

If the core be of an irregular diameter—i.e., larger at certain points than others—the plastic composition can readily be stretched over the larger parts, and when it dries will conform itself accurately to the contour of the core. Of course, the diameter of the tube must be somewhat, though very slightly larger, than the diameter of the core.

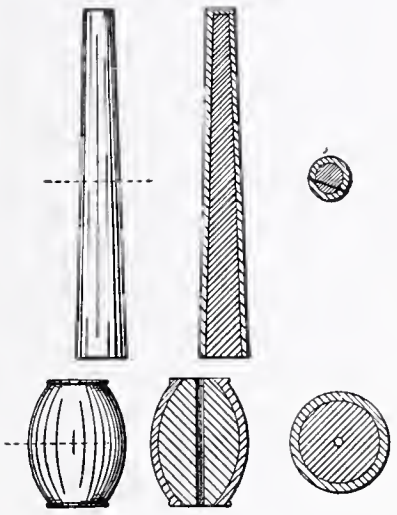

Fig. 184.—Producing Hollow Celluloid Articles, according to Hyatt.

If desired, the material can be forced from the stuffing machine through a nozzle, which forms a tube in it, leaving the balance of the material in any desired shape. Thus, a piece of composition which in the aggregate would make, for instance, a number of unfinished eyeglass frames, superposed one above the other, can readily be forced from the machine, the core being received into the tubular portion of this structure, which, when it dries upon the core, can be severed into sections of suitable thickness to form the frame of the eyeglass, or, the core being formed and the composition expelled and allowed to dry on the core, sections of it can be removed and united so as to constitute links for chains. Of course, the sections of the core which are removed when the material is severed are taken out. In this manner a great variety of hollow frames, such as rings, buckle frames, spectacle frames, and various other structures, can be formed in the

aggregate, and completed by removing a section of the core and material. The latter being suitably conformed, structures having two or more apertures in them can be formed and fed to an appropriate number of cores filling such apertures. The invention is not limited to surfaces that are circular, but may be applied to any core having a continuous unbroken outline.

In the above operation no pressure is exerted upon the core except such as is brought to bear by the material in shrinking, and hence cores of comparatively soft material can be readily coated, and as the material binds the core very closely, the probability of its expanding is greatly reduced.

When celluloid is used in the above process it should be prepared with a larger amount of solvent than is usually employed, to the end that a greater shrinkage may be obtained. By withdrawing the core before the composition has fully dried, a tubular structure remains, which can be severed into sections to form tubes, pencil cases, and other similar formations.

Manufacture of Hollow Articles from Pyroxylin Plastics. The processes comprised under this heading are naturally subdivided into (*a*) those produced from tubes, and (*b*) those formed from sheets. In the former, the process of J. Ward[1] consists in manufacturing ornamental hollow articles, such as jewel boxes, by stretching a tube of the material upon a cylindrical mandrel or support, turning the tube in a lathe to equalize its thickness and remove imperfections, severing the tube by an annular incision to separate it into two separate sections, removing these sections and fitting them together, and then drawing the sections over and shrinking them upon a shaping mandrel or core having an external configuration conforming to the outline or shape of the article it is desired to produce.

In carrying this invention into practice (Figs. 185, 186) a tube 1 is produced from celluloid or other pyroxylin compound by a stuffing machine, and this tube in a heated condition is drawn or forced upon a cylindrical mandrel 2, of greater diameter than the original tube, which latter shrinks and hardens on cooling and closely hugs the mandrel. The surface may be traced or cut with any desired ornament—such as represented in Fig. 186, which shows a tube on the mandrel 2 after being turned and ornamented. The truly turned tubular structure is drawn or placed over a shaping core 4, having an external configuration conforming to the shape of the hollow object it is desired to pro-

1. U.S.P. 439451, 1890. For making hollow forms from plastic materials see Smith and Grasser, U.S.P. 178479, 1876; F. Jones and J. Jarvis, U.S.P. 368501, 1887.

duce. This is reheated until it shrinks sufficiently to conform to the shape of the mandrel. The tubular structure on cooling hardens and retains the exact external form of the shaping core. It may now be removed and used as a box-body—as, for instance, a novelty in pyroxylin goods—it only being necessary to apply a bottom piece and a lid or cover to produce a box; by a further procedure, the shaped tube itself constitutes the body portion and also the lid or cover. To accomplish this the stretched tubular structure, *B*, on stretch-

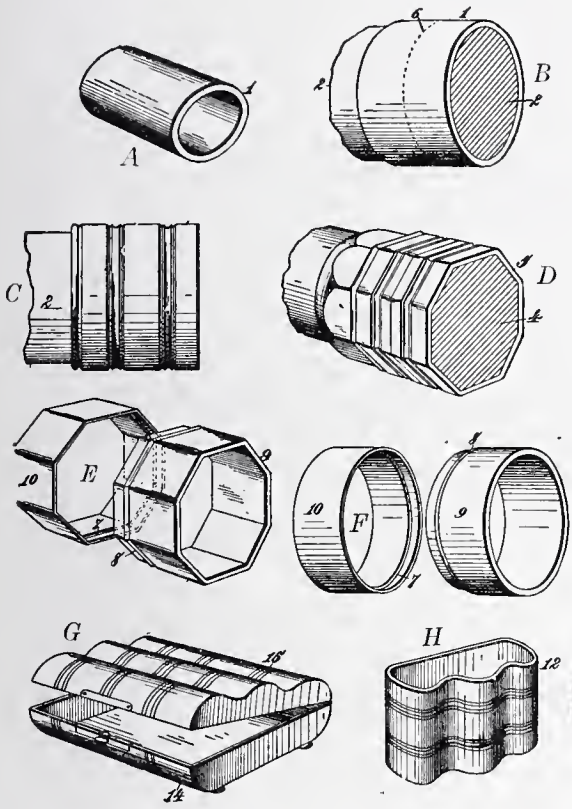

Fig. 185.

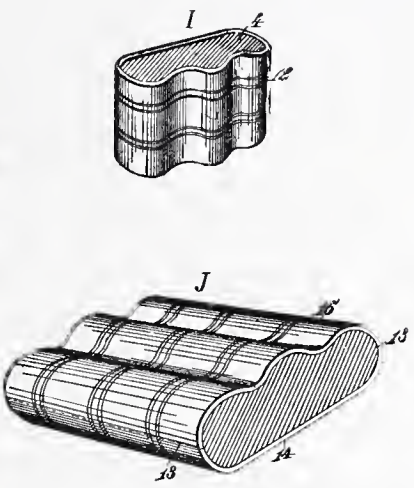

Fig. 186.

Manufacturing Hollow Pyroxylin Articles (Ward's Process).

ing-mandrel 2 may be sawed by an annular incision on the line 6, to divide the stretched tube into two separate sections, which are coextensive, or approximately so, in size. These sections are subsequently turned to provide one with an internal annular shoulder or lip 7 and the other with an external annular shoulder or lip 8, whereby one section can slip into the other and constitute the separable box-body 9 and box-lid 10, as shown in *F*. The box-body 9 and box-lid 10 are then put together by means of the lip 7 and external annular shoulder 8, and while they are together are drawn or forced over

a shaping core 4, having an external configuration conforming to the shape of the box desired. The sections, if used to produce a box, will be provided with inserted or otherwise attached disks to constitute the bottom wall of the box-body and the top wall of the box-lid. Instead, however, of sawing the tube on the annular line 6 while such a tube is on the cylindrical mandrel or support 2, as described with reference to *D*, it may be shaped on a shaping mandrel or core 4, as in *I*, and when the structure cools, shrinks, and hardens it can be removed from the core and used as a novelty, such as a box-body 12, *H*. The shaped tubular structure formed on the shaping mandrel or core 4, as in *J*, may be sawed longitudinally on its median line, as at 13, to divide it into a box-body 14 and a box-lid or cover 15, which parts may be hinged at one edge and thereby produce a jewel or other box, such as represented in *G*.

By this method the form of the completed articles may be indefinitely extended.

Perhaps the best-known example of subdivision (*b*),—where the hollow articles are formed from pyroxylin sheets—is the method of C. Thurber,[1] which consists—as shown in Figs. 202, 203—in subjecting a sheet or blank of material from which the article is formed to the action of a heated plunger whose acting end is shaped like the interior of the article to be formed, whereby the sheet of material is pressed through an open and continuous channel which corresponds in shape to the exterior contour of the article to be formed, the sides of the first part of the open continuous channel being heated to render the material plastic and the succeeding portion cooled, so as to chill and "set" the article after it has been shaped. The operation of the device is as follows: When the apparatus is in the position as shown, the sheet of material is placed upon the bed *A* of the steam-table press and across the opening on the draw plate *B*. The diaphragm *D* then descends and holds the sheet *d* in position, as shown in Fig. 202. The plunger *P* then descends upon the heated sheet *d* and forces it through the heated draw plate *B* into the position shown in Fig. 203. At this point the cutting edge *c* cuts the heated article from the sheet, and the farther descent of the plunger carries the article thus formed down into the opening through the chilling plate *C*, where it is chilled and set, as shown in Fig. 203. This opening in the chilling plate *C* has no bottom, and as the plunger *P* rises, the article *d*, which has been cooled by the chilling plate, drops out of the apparatus, which is now ready to repeat its operation upon another portion of the sheet or upon a new blank, which is placed upon the bed of the press over the draw plate.

1. U.S.P. 669330, 669331, 1901.

The stripping plate *b* is designed to strip the formed article from the plunger as the plunger rises.

Lining Hollow Articles with Celluloid, such as the inside of pipes and tubes, can be accomplished by means of the method devised by M. Lefferts [1] and shown in Fig. 187. The value of a celluloid-lined tube is that it can easily be kept clean, and will not be affected by, nor injuriously affect water, beer, ale, vinegar, or dilute acids.

To line a pipe, for instance, a tube of celluloid is first prepared as previously described, and of such size that it will readily pass into

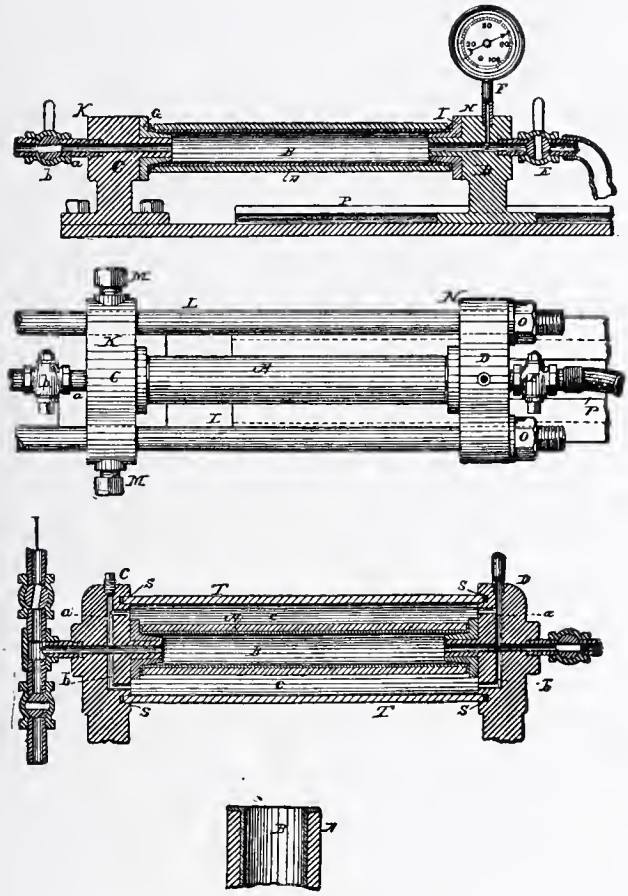

FIG. 187.—The Lefferts Process for Lining Hollow Articles with Celluloid

the pipe, the ends of the tube being afterward bent outward over the edges of the pipe, in order that the agent used to effect the adherence of the tube will not pass between it and the pipe. Steam or other heated fluid is then passed through the tube inclosed by the pipe until the celluloid has become plastic or softened, at which time the outlet is closed, and the steam continued, the effect being to expand

1. U.S.P. 281529, 1883.

the celluloid tube and cause it to adhere securely against the inner superficies of the pipe. After this step, the pipe is cooled by water, thereby "setting" the celluloid and completing the operation.

In lining a pipe of fragile material—such as glass—it will be necessary, in some instances, to apply a pressure upon the outside of the pipe to be lined of equal force with the internal pressure, thus preventing the latter pressure from fracturing the pipe. In *C* is shown a means for accomplishing this result. *A* denotes the tube, of glass, for example, *B*, the celluloid tube; *C*, the supply nozzle; *D*, the outlet nozzle, which has a cock or valve and a gauge, such as those above described. The nozzle *C* is also connected with a supply for steam or hot or cold water. The nozzles *C D* have the usual contracted mouths entering the tube *B*, and, in addition, are supplied with the groove *S*, in which is placed the end of the inclosing pipe *T*.

Forming Celluloid Open-Seam Coverings, adapted to the covering and embellishment of material similar to the various parts of bicycle frames—such as the main tubing, braces, spokes and forks—is carried out according to the process of J. Robinson[1] and shown in Fig. 188. A number of pieces of proper size and desired shape to fit the various mandrels are first cut from sheets of celluloid, allowance being made in each case for a slight overlapping of the edges. A supply of blanks having been provided, the petcocks *h* and valves *g* are opened until the air is released and the mandrels *c*, *d*, *e*, and *f* become heated. When the latter are sufficiently hot to enable the sheet of celluloid to be molded, the operator, wearing asbestos-covered gloves, places a blank sheet upon the mandrel and carefully wraps it around and presses it into shape, rubbing and pressing it until it assumes the exact form of the mandrel. In *B* is shown a blank *i* upon the mandrel *c*, as partially formed in tubular shape, with the edge overlapping, as indicated in dotted lines. The hand-pressure exerted will be sufficient to give the blank the exact contour, but it is not sufficient to unite the longitudinal edges, as would be the case if the mandrel and blank were placed in a mold and pressure applied. The result is that an open-seam tube will be formed which may be opened and sprung over the bar to be covered.

In forming the covering for the fork the blank is first placed upon the straight mandrel *d* and shaped, when it is removed and in turn applied to and carefully fitted upon the curved mandrel *e*. As soon as the sheet is accurately formed the steam is shut off, when in a few seconds the temperature is sufficiently lowered to enable the molded product to retain its shape without danger of distortion, when it may

1. U.S.P. 607415, 1898.

be readily removed. The steam is then turned on and the operation repeated with another set of blankets.

In *C*, *D*, *E* are represented the finished products. In *C*, *j* indicates a tube of celluloid or other like material adapted for covering the main portion of the frame, while *k* and *l*, respectively, *D* and *E*, represent like covering adapted to be applied to the forks and braces.

It is claimed that when the hollow mandrels are heated from within to about 90° the shells or covers may be formed rapidly and molded with uniform accuracy and smoothness into a merchantable prod-

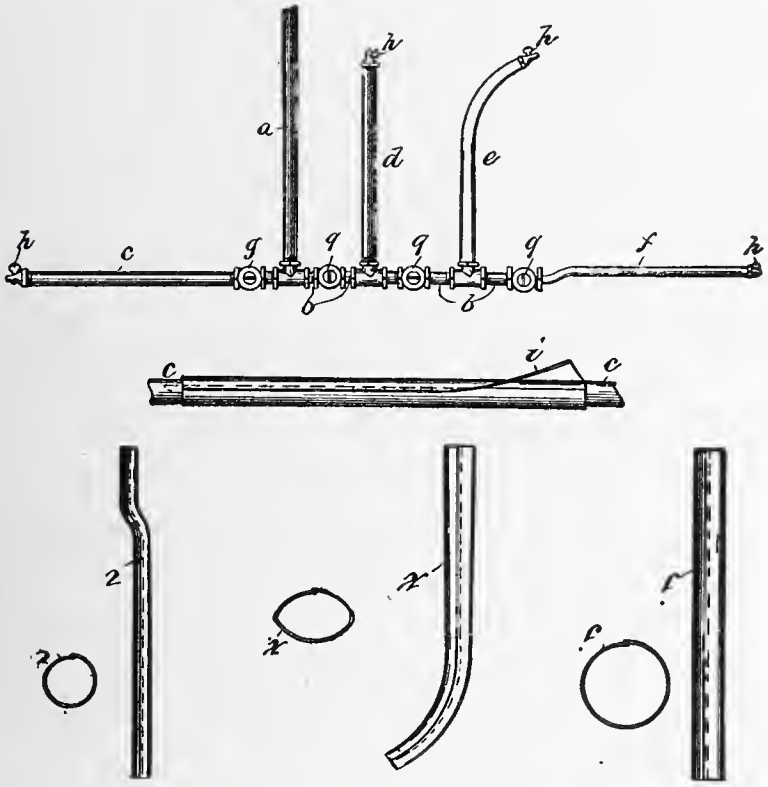

Fig. 188.—Forming Celluloid Open Seam Coverings.

uct adapted to be applied as a covering for the protection and embellishment of bicycle frames. More or less judgment, however, is required on the part of the operator in molding the curved portions of the tubes, inasmuch as it is necessary to shape them when the mandrel is hottest.

Formation of Celluloid Martingale and Similar Rings, according to the invention of D. Lockwood,[1] is a distinct improvement upon the former method of producing rings by turning, which involved considerable loss of material. The distinctive novelty of Lockwood's invention consists—as shown in Fig. 189—is first preparing a rod

1. U.S.P. 251259, 1881.

of appropriate diameter which is cut into sections that correspond in length with the ring which it is desired to produce. The piece or section, having been made ready, is bent to form a ring, as shown in 2, the ends being brought in contact with each other. The ring is then introduced into an appropriate mold or die and subjected to heat and pressure, which will cause the ends to be welded, forming a complete and unbroken ring. Best results are obtained when the piece is in a plastic condition, but a less satisfactory result may be attained when the material has become rigid. Under all circumstances, when the ring is taken from the mold or die its tendency to warp or twist is so great that it is essential that means be provided to prevent it from doing so. This tendency is corrected by the use of mechanism

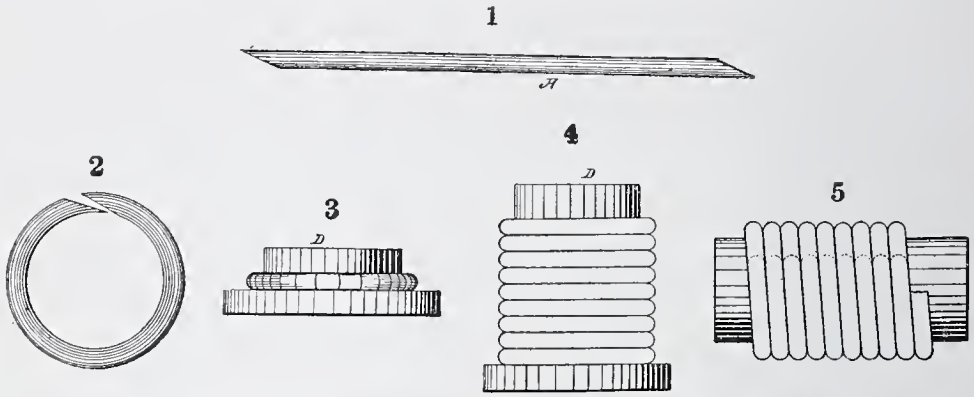

Fig. 189.—Forming Solid Celluloid Rings, according to Lockwood.

shown in 3 and 4, the important elements of which are the circular hubs *D*, corresponding as nearly as may be practicable with the interior periphery of the ring after it has been taken from the mold. As soon as it has been subjected to the action of the mold the ring will be passed over the hub *D*, and permitted to remain there until dried. By employing the hub the ring is prevented from warping or shrinking to any material extent in any direction, except toward its center, against the hub, and this produces no objectionable effect.

If preferred, the rod may be made to form a helical coil upon an arbor, as shown in 5, and the pieces or sections formed by cutting the coil in a given plane, as indicated by dotted lines; but the manner in which the sections are formed is a matter of judgment, which may be varied according to circumstances. The same is true of the form of the hub, except that it is essential that the core or part which resists the shrinkage toward the center be of appropriate size and shape and the ring held so that it will not warp or twist in a relatively vertical direction.

Difficulty was experienced in satisfactorily cementing the two edges of the ring, to overcome which a dowel pin may be introduced,

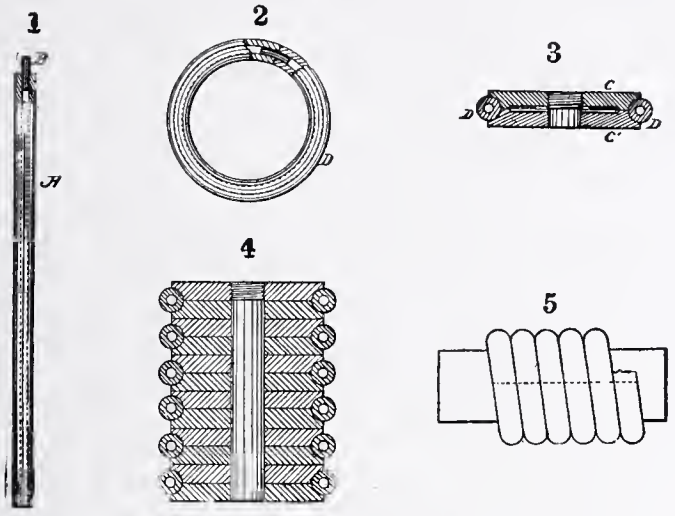

Fig. 190.—Forming Solid Celluloid Rings, according to Lockwood.

and the ends of each piece connected as shown in 2 of Fig. 190, the ring being finished by subjecting to pressure in an appropriate mold.[1]

In Emil Kipper's method [2] shown in Fig. 191, the plastic compound, having been produced in rod form, is wound about a mandrel or stick,

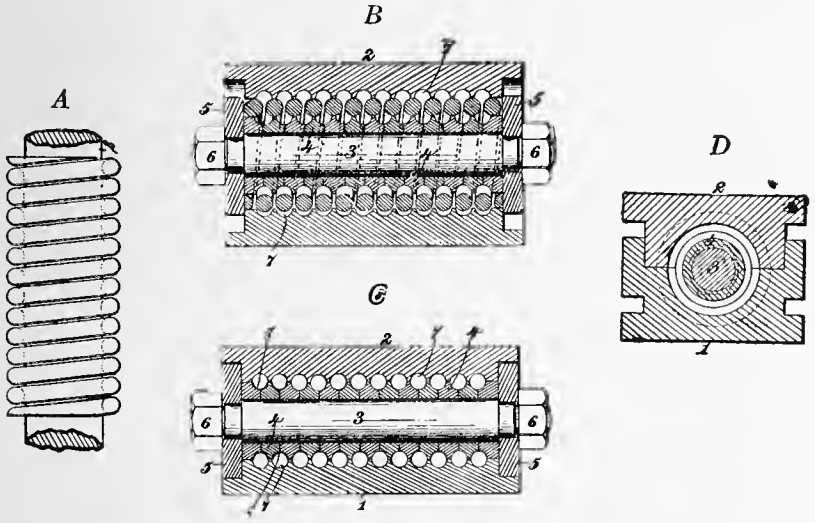

Fig. 191.—The Kipper Process for Making Solid Pyroxylin Rings.

8, in *A*, until ready for use. It is then taken off and placed upon the composite spindle mandrel 3 and 4 and encircling spirally the rings,

1. Process of D. Lockwood, U.S.P. 251258, 1881.
2. U.S.P. 299802, 1884.

and not coinciding with their grooved edges, since the latter are parallel to each other and not spiral or in the form of a screw. The spindle 3 is now placed between the two sections of the die, as in *B*, and, after the application of suitable heat, pressure is applied, forcing the two sections together and causing the material forming the spiral rod to rearrange itself upon the rings and fill the recesses, resulting, by their union with the recesses of the upper and lower sections of the die, in the change of the plastic material from the spiral form into that of a series of concentric rings, as in *C*. Having thus formed the rings and caused the surplus material to pass off in the form of overflow, the die is cooled and opened, and by removing the nuts 6 the spindle 3 is readily withdrawn and the series of forming rings 4 and the formed plastic rings are removed, ready for finishing. The forming rings 4 are now again replaced on their spindle 3 and encircled with another spiral of plastic composition, and then placed in the upper and lower sections of the die, which is heated and closed by pressure, thereby producing another set of concentric rings, which are taken off, and the operation repeated.

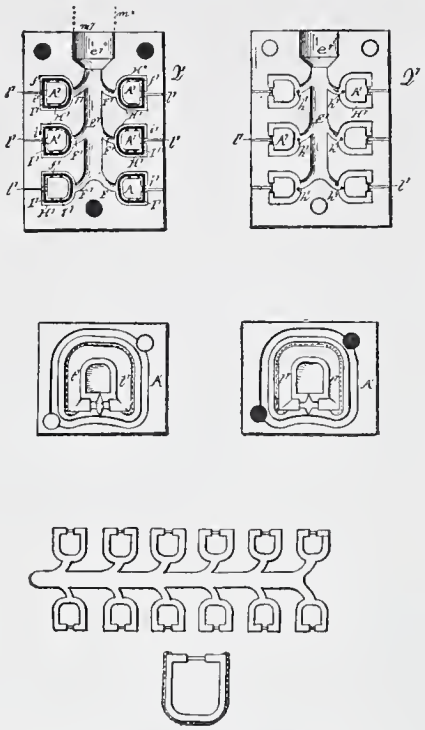

Fig. 192.—Coating Articles with Celluloid, according to Hyatt.

Coating Articles with Celluloid. In the coating of small articles the process first patented by J. Hyatt [1] with unessential modifications, is typical of the methods in use to-day.[2] As shown in Fig. 192, 1 and 2 are opposite faces of a mold, in this instance designed for coating

1. U.S.P. 202441, 1878.

2. Prior to this invention, the usual proeess was to form two seetions of the plastie eomposition between whieh the eore to be eoated was plaeed, the eomposition being then elosed upon the eore, and the whole subjeeted to great pressure; or one seetion of eomposition plaeed in a suitably formed die, the eore being deposited on this seetion, a seeond seetion being laid over the eore, and the whole then subjeeted to pressure.

The produet of these proeesses has, however, proven unsatisfaetory, as there was a seam about the eore where the plastie eomposition was not homogeneously united, and henee, when thoroughly dried, the covering was apt to eraek off or open on the line of the seam. As a means of euring this tendeney it was sought to unite the edges of the seetions by the use of adhesive matter, but this proved a failure in many instanees.

harness buckles, 3 and 4 being like views of the finishing die A^1. T is a plan view of the cores covered with plastic but still connected, and just as they leave the die, 6 being a plan view of the covered core as it appears when removed from the die.[1] The *modus operandi* is to attach the die to a stuffing machine at the point m^2 by securing in a hydraulic clamp.[2] The composition in a plastic state is forced from the stuffing box into the die by means of a lever which communicates movement by hydraulic pressure to the piston of the stuffing box and also operates the clamp. The composition in a state softened

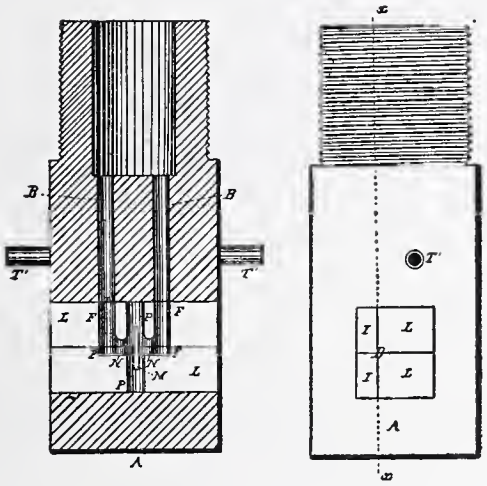

FIG. 193.—The Hyatt and Burroughs Apparatus for Coating Bars on Springs with Celluloid.

by heat is thus forced into the forming cavity and, after cooling, the individual buckles cut out.[3]

In the coating of more elaborate or intricate bodies, such as springs or curved bars, the apparatus shown in Figs. 193, 194 may be used,

1. For description of devices employed for the purpose of amalgamating the plastic and forcing it into the stuffing boxes see U.S.P. 133229, 1872, J. & I. Hyatt.

2. The die Q^7 is provided at one end with coincident concavities, which, when united, form the aperture e^7, to receive the end of the duct m^7, through which the composition in a plastic state is brought under pressure from the stuffing box.

3. To enable the composition to pass around upon all sides of the core, studs f^7 are set in the cavity, which sustain the core above the surface, while pins h^7 are provided adjacent to the boss A^7, at the center of the cavity, to prevent the lateral movement of the core, which is thus suspended in the cavity, with a circumjacent space for the reception of the composition. These studs and pins may readily be modified in many ways to adapt their functions to cores of other forms than here presented. Thus the studs f^7 may be made concave, and the core held between such studs provided in the upper and lower parts of the die, and thus the pins h^7 dispensed with; or the pins h^7 may be provided with a step or extension to sustain the core, and thus the studs f^7 dispensed with.

In the present instance one part of the core is supported by the elevation i^7, but this is simply to cut off the composition at this point, leaving the core clear, so that the tongue of a buckle can be placed directly upon it.

In the case of a ring, or other analogous structures, only the studs and pins would be required to sustain the core.

which consists of a plug formed in sections in which are provided the parts of certain cavities and apertures, so coincidentally arranged that when the sections are united the device forms practically a solid plug.[1]

By this mechanism, coiled or straight springs, as well as bars or strips of wood or metal, may be smoothly coated.[2]

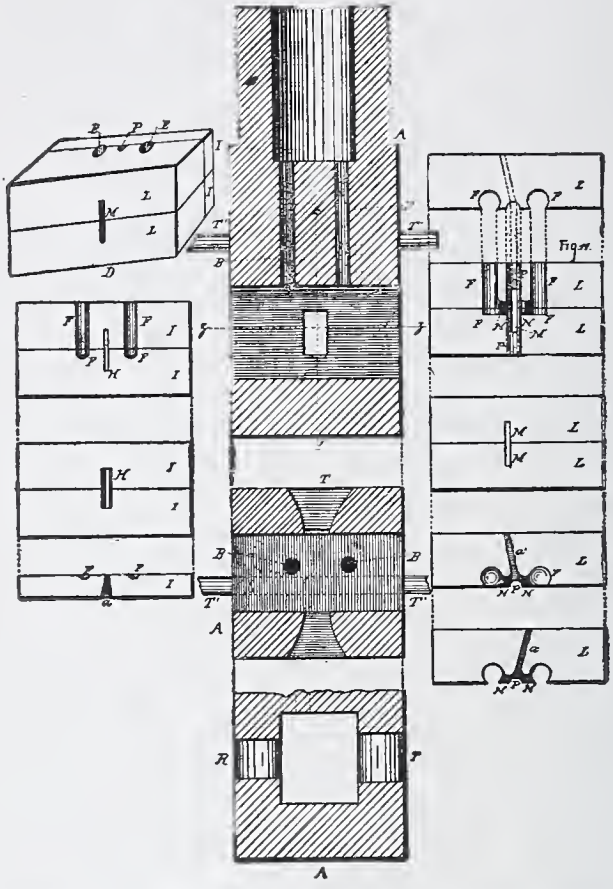

FIG. 194.—The Hyatt and Burroughs Apparatus for Coating Bars or Springs with Celluloid.

1. J. Hyatt and C. Burroughs, U.S.P. 204229, 1878. This construction is secured in a suitably shaped aperture in the nozzle of a stuffing machine, which is furnished with channels that connect with channels in the plug, so that when the stuffing machine is operated the composition is forced into the cavities in the plug, through which the bar is passed, being coated as it moves through the composition.

2. The gates N are opposite each other, as also are the cavities P and the inlet H and the outlet M.

Opposite each other on the sides of the nozzle A, and appropriately placed, are the inlet R and the outlet T, forming continuations of the inlet H and the outlet M, and having their lower sides curved, if desired, to permit the admission and exit of a curved bar.

The nozzle is provided with a suitable means of keeping it heated, a steam-pipe, T^1, being used in the present instance—this to preserve the material in a plastic condition.

By the above mechanism, coiled or straight springs, as well as bars or strips

The following described method, devised by J. Hyatt,[1] is intended primarily for coating picture and clock moldings, and shows excellently how pyroxylin sheets may be made to copy most uneven surfaces. Fig. 195A is a central vertical transverse section, showing the molding with a strip of celluloid attached and inserted in a rubber tube preparatory to receiving pressure. Fig. 195B is a central vertical logitudinal section, showing the molding inserted within a rubber tube having the nozzle block in its end, the whole being inclosed in a circular metallic casing having an inlet and outlet, whereby external pressure may be applied to the rubber tubing.

A denotes the molding before the coating has been applied, which may be of any usual shape. The superficies of the molding is coated with an appropriate cement or adhesive material, and the strip *a*, of celluloid, temporarily attached to span the face of the molding, the width of the strip being equal to the superficies of the molding desired to be covered, and its interior surface by preference being also coated with an appropriate adhesive material.

The strip may be attached by bending the edges so that they will grip the molding, as shown in Fig. 195A.

The molding and strip of celluloid having been adjusted in this way, a rubber tube, *B*, is passed over them, so as to inclose the entire length of the molding, and, if desired, a block, *d*, may be inserted to hold the parts together.

At one end of the rubber tubing a nozzle, *F*, is provided, adapted to be inserted in a vacuum pump, as shown in *B*.

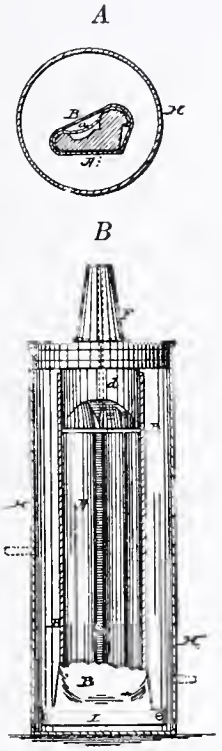

Fig. 195. — Hyatt's Method of Coating Picture Moldings.

The parts having been arranged as stated, the nozzle of the tubing is inserted in the pump, upon the actuation of which the tubing will necessarily be drawn with great force toward the molding, thus causing the celluloid to adapt itself to the form of the molding, in which position it is held by the cement or other adhesive material.

of wood or metal, or any sufficiently dense material, may be smoothly coated.

If a fin is desired upon the edge of the article, it is only necessary to deepen the cavities *P* and widen the outlets to correspond with the increased width of the coating.

1. U.S.P. 232037, 1880.

The operation of the pump having been continued for a suitable length of time, the nozzle is removed from the pump and the molding taken out, when it will be found to be in a finished condition, substantially ready for the market.

If desired, exterior pressure may be applied to the rubber tube in order to more firmly compress the veneer or coating to the molding or other article, the vacuum pump being employed or not, as may be preferred.

H indicates a metallic casing, in which, if desired, the rubber tube *B*, containing the molding, may be inserted, as shown in the drawings,

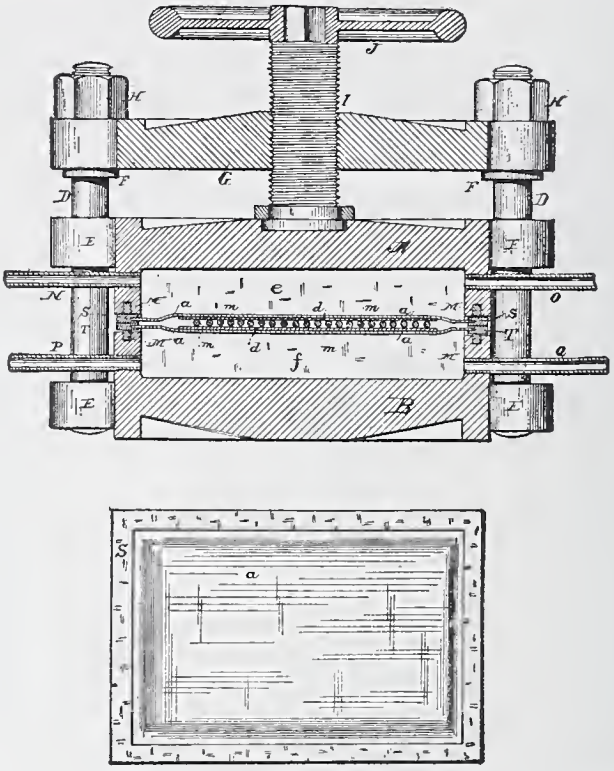

Fig. 196.—The Hyatt Press for Coating Articles with Celluloid.

and external pressure applied. The lower end of the tube *B* is, in the present instance, closed in an air-tight manner by a clamp *I*. Carved objects, busts, medallions, and other objects of delicate and intricate configuration may be coated in this manner.

Where a number of articles are desired to be coated simultaneously whether they are of irregular or uniform outline, the method of J. Hyatt,[1] shown in Figs. 196, 197, 198, is suitable, and used at the present time, the articles to be coated being placed between sheets of

1. U.S.P. 280745, 1883.

plastic, these being encompassed by diaphragms or sheets of flexible material, and pressure being applied on the upper and lower sides of the diaphragms as shown.[1] In the operation of this invention the platen *A* is drawn to the upper portion of the rods *D*. A sheet of plastic material, *d*, is placed upon the diaphragm of the frame *T* (the frames with their diaphragms being at this time removed from the press). The articles to be coated, whether they be knife handles, umbrella handles, or other devices, are laid upon the sheet of celluloid *d*, being removed from each other a suitable distance, according to their thickness and outline. Another sheet of celluloid is then placed upon the articles, and then the frame *S*, with its diaphragm *a*, is placed evenly

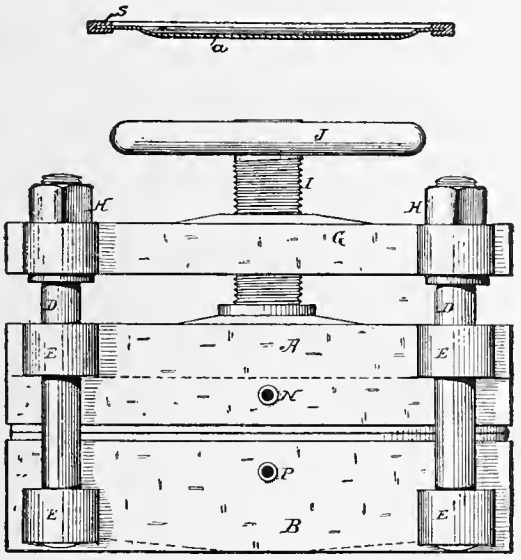

FIG. 197.—The Hyatt Press for Coating Articles with Celulloid.

upon the frame *T*, after which the two frames *ST* in this condition are slid between the platens *AB*, being allowed to rest upon the packing *M* of the lower platen, *B*. This step of the process being completed, the upper platen *A*, by means of the screw *I*, is forced downward until its packing *M* presses directly upon and surrounds the edges of the frame *S*. The platen *A* is screwed firmly down upon the frame *S*, whereby air-tight joints are formed between the platens *AB*, and the frames *ST*, and the water, steam, or other element which is admitted

1. In the process of Bluemel (E.P. 17496, 1889; abst. J.S.C.I., 1890, 9, 522) a tube of celluloid of smaller diameter than the article to be covered is placed in boiling water or steam and stretched over a heated mandrel. It is then plunged in cold water and the mandrel removed. The article is then inserted and plunged with its celluloid covering into boiling water for about thirty seconds, until the tube has contracted and closely fits the article, when a final plunge into cold water for a final contraction and subsequent drying completes the process.

to the hollow portions *ef* is prevented from escaping except through its proper delivery. After the platen *A* has been screwed firmly down, hot water, steam, or other heating agent is admitted under a pressure of about 125 lb. to the sq.in., through the supply pipes *NP* to the hollow portions *ef* of the platens *AB*, the effect being that the diaphragms *aa* and the sheets of celluloid *dd* are pressed toward each other and around the articles *m* being coated. As the diaphragms move toward each other, they cause the sheets of celluloid to meet between the articles, forming joints and insuring the complete encasement of the articles in such manner that they can be separated and finished without injuring or disfiguring the coating. The combined heat and pressure operates to soften the celluloid and wrap it closely

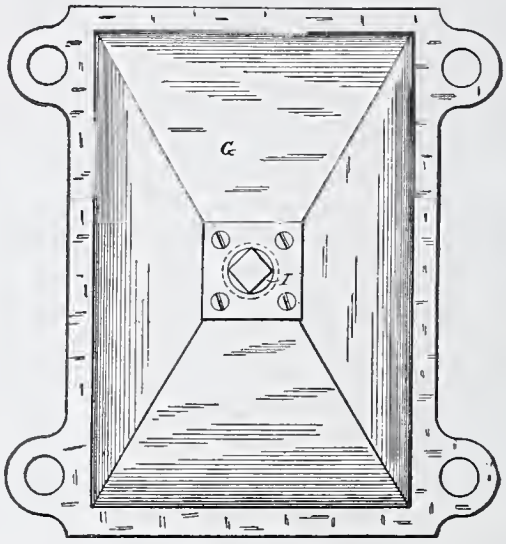

Fig. 198.—The Hyatt Press for Coating with Celluloid.

around the articles, and to weld together those portions of the opposite sheets which come in contact with each other. After the heating agent has been continued under pressure against the diaphragms *aa* a sufficient length of time to effect the welding of the sheets of celluloid it is relieved, and water or other cooling agent, also under pressure, admitted to the chambers *ef*, the celluloid being cooled and caused to "set" in the configuration given to it by the heating agent. After the sheets have been attached to the articles, they are cut vertically between each, and then finished in any convenient manner.

In the manufacture of handles for brushes, whiskbrooms, umbrellas, parasols, canes, tools, whips, doors, and similar articles by covering a wooden or composition core with celluloid, the patented methods

of E. Kipper[1] and the later process of J. France[2] are perhaps the best known and most valuable. In the former method, shown in Fig. 199, a handle is covered longitudinally through its center by first cutting to the proper size a piece of celluloid or similar compound, which is warmed until it becomes plastic. This is laid in the depression of the lower half of the sectional die. The mandrel *B* is then passed through the hollow core *C*, a piece of celluloid laid in the mold being superimposed upon both mandrel and core. Another sheet of plastic having been warmed is laid upon the core and its mandrel, upon which is carefully adjusted the upper section of the mold, which should be warmed to about 65°, the mold and its charge being then ready for the press, the lower plate of which should be steam heated.

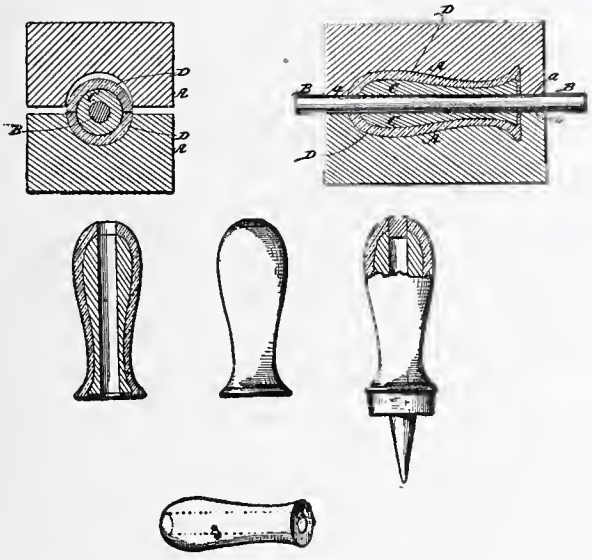

FIG. 199.—Kipper's Process for Coating Handles with Pyroxylin.

Pressure being applied gradually, the two pieces of celluloid are completely and firmly united.[3] In the second process, the disadvantages

1. U.S.P. 333469, 1885.
2. U.S.P. 430520, 1890.
3. Instead of using two pieces—the one in the lower part of the mold, the other in the upper part—one piece can be used, the edges of which, when wrapped around the core, barely touch each other, and by applying heat and pressure, as described above, a perfect weld will result. The core may also be introduced into a tube previously prepared to a suitable size, and by applying heat and pressure it will adapt itself to the shape of the mold. If the plastic compound has been seasoned, it is desirable that the lower piece of plastic compound should be brushed over with a solvent, as wood alcohol, on such portion as may come in contact with the surface of the upper piece of same material· but if what is termed "green stock" be used such application of a solvent is unnecessary.

In order to give shape to the article, another die may be employed, such as described in U.S.P. 271494 and No. 271495, granted to J. McClelland, 1883.

By adopting this process it is necessary that the core should have the perfect contours which are desired to be produced on the outside of the finished article,

of the use of wooden cores are overcome, wood being objectionable in that it shrinks and swells alternately upon exposure to extremes of temperature and humidity, and consequently often rattles in the shell or case.[1] A tube is formed of celluloid tubing, the core to be covered being of plaster of paris, whiting or other non-shrinkable composition. The plastic tube as it issues from the hot stuffing machine is fitted over the sections of the core, being then allowed to cool. If, after cooling, the celluloid has not adjusted itself snugly to all the

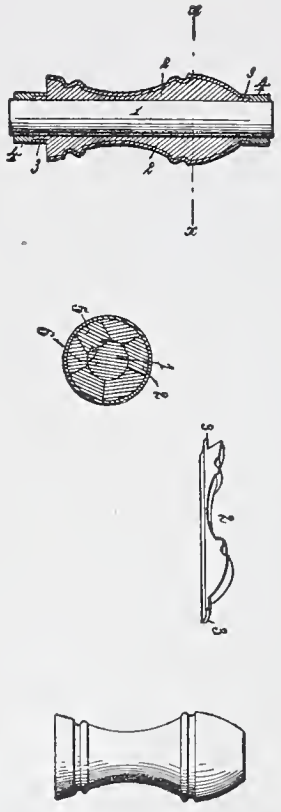

Fig. 200.—Coating Handles with Pyroxylin, according to France.

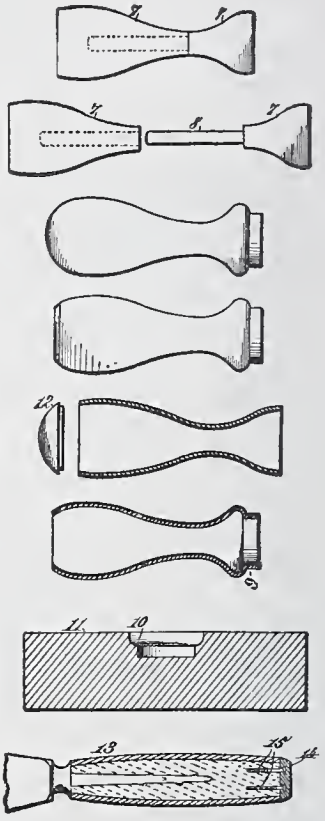

Fig. 201.—Manufacturing Pyroxylin Handles, according to France.

forms of the core, it may be immersed in hot water, and after softening, snugly fitted to the core and allowed to cool. The chilled article is polished and finished as desired, after which it is placed in a seasoning chamber to eliminate further small amounts of solvents. The steps of formation are shown in Figs. 200, 201.

as by this process no flow of the material is produced, which may take place by using the solid die.

1. The objections to a wood filling are overcome by the composition described in U.S.P. 328843, 1885, J. France.

The continuous process of coating, as patented by C. Thurber, is designed especially for covering boxes[1] and similar articles of hollow ware, as indicated by reference to Figs. 202, 203. The method of manipulation of the process is as follows:

When the apparatus is in the position shown in 1, the sheet or blank of material is placed upon the bed *A* of the steam-table press

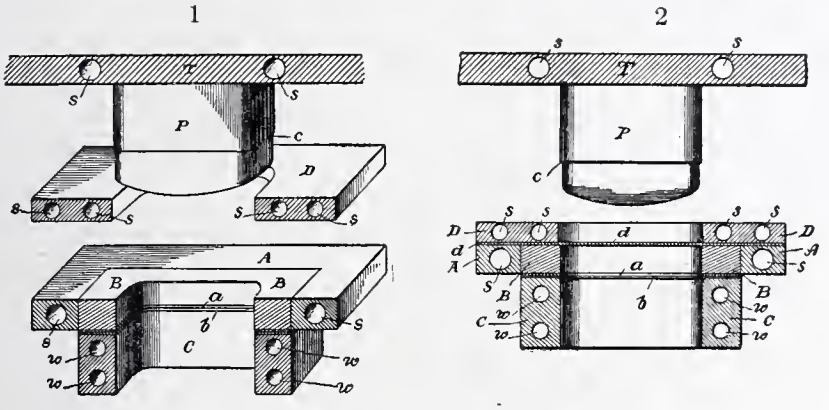

Fig. 202.—Thurber's Apparatus for Forming Hollow Pyroxylin Articles.

and across the opening in the draw plate *B*. The diaphragm *D* then descends and holds the sheet *d* in position, as shown in 2. The plunger *P* then descends upon the heated sheet or blank *d* and forces it through the heated draw plate *B* into the position shown in 3 of the drawings. At this point the cutting edge *c* cuts the heated article from the sheet or blank, and the further descent of the plun-

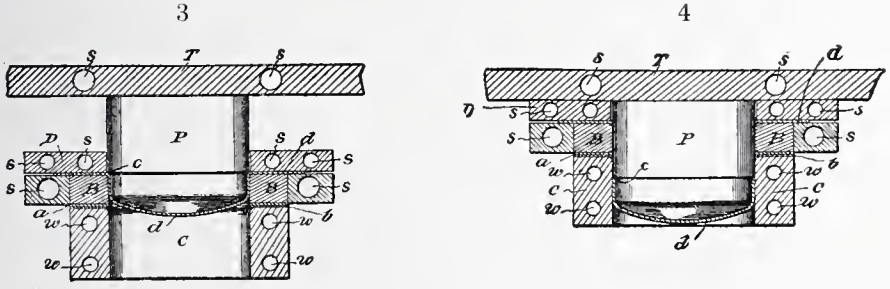

Fig. 203.—Thurber's Apparatus for Forming Hollow Pyroxylin Articles.

ger carries the article thus formed down into the opening through the chilling plate *C*, where it is chilled and "set," as shown in 4 of the drawings. This opening in the chilling plate *C* has no bottom, and as the plunger *P* rises the article *d*, which has been cooled by the chilling plate, drops out of the apparatus, which is now ready to repeat its operation upon another portion of the sheet of material or upon

1. U.S.P. 669330, 1901.

a new blank, which is placed upon the bed of the press over the draw plate.

The stripping plate *b* (illustrated in the drawings) is designed to strip the formed article from the plunger as the plunger rises, but it is not essential, for ordinarily the friction between the formed article and the sides of the barrel in the chilling plate *C* is sufficient to strip the article from the plunger as the plunger rises. The length of the barrel in the chilling plate *C* is varied according to the thickness of the sheet of material to be formed or the depth of the article, a thicker sheet of material or a deeper article requiring greater length of barrel in the chilling plate to cool it than is required with a thinner sheet. It is evident that this process admits of the coating of a large number of articles in a short time. The die may be cut so as to coat round, square, angular, or irregular objects.

Molding Pyroxylin Plastic Objects. Celluloid both pure and when mixed with pigments and other filling substances can be molded into the most diverse and intricate forms by means of heat and pressure with small variations due to the contour, strength, or other peculiarity of the object to be molded. From the numerous methods which have been devised, patented, and exploited, the following are taken and described somewhat in detail, being representative of the various classes of manipulations so that the entire field of plastic molding is covered in general by these specific examples. The unavoidable shrinkage in drying of any manufactured article containing various amounts of volatile solvents, causing the material to become spongy and filled with air cells by reason of rapid evaporation of the solvent and expansion of interior gases, were difficulties which had to be overcome before satisfactory methods of shaping plastic forms were perfected. The earlier attempts to overcome these imperfections consisted in subjecting the articles, immediately after they are formed, to pressure in porous molds or in vessels filled with sand. When porous molds are used, they are required to precisely fit each article, which is both difficult and expensive, especially in the case of fine and delicately molded articles, which usually became distorted when subjected to pressure in such molds. The insufficient mobility of sand is the principal objection to its use for this purpose. In order to obviate these defects, especially in rounded molded articles, J. Hyatt [1] subjected them to pressure in a closed vessel by means of air, but preferably with water. When the latter is subjected to a uniform and gradually inceasing pressure, its tendency, irrespective of the configuration of the object, is to exert a uniform pressure, admit of

1. U.S.P. 138254, 1873.

expulsion of solvents, and reduce the size of the object without distortion or derangement of parts.

By means of the arrangement shown in Fig. 204, the article to be dried is placed in the lower part *A*, upon a diaphragm made of open cloth stretched upon a hoop to prevent the marring of the object, the upper part *C* being then securely fastened to the lower. Water, glycerol, turpentine, or a mixture of alcohol and water or any other liquid possessing a sufficient affinity for the solvent to readily absorb the same, is forced in by means of a pump until a pressure of about 12 atmospheres is established. It is usual to allow the article to remain under this pressure for thirty-six to forty-eight hours, the rapidity

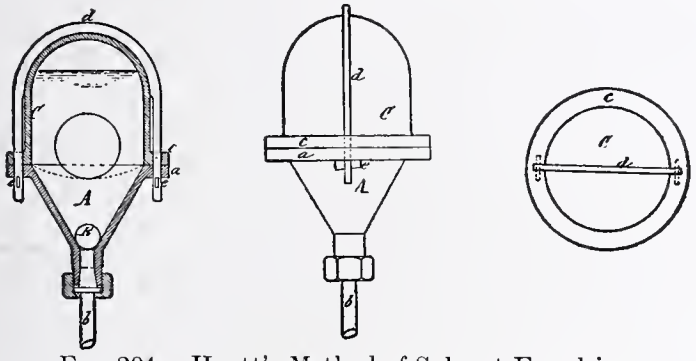

Fig. 204.—Hyatt's Method of Solvent Expulsion.

of the drying process being regulated by employing a liquid possessing a greater or less affinity for the solvent.

Where dry heat is used in molding, as in the process of R. Hunt,[1] the heat is applied directly to the flask or mold as shown in Fig. 205, where 1 represents an exterior view of the apparatus, 2 a vertical section, and 3 the fork used for handling the flask. The heating agent is placed directly below the circular opening in the bottom of the screw press, the hot air being kept in direct contact with the upper part of the flask by means of the loose jacket.

In Fig. 206 is illustrated a die adapted to the formation of small solid articles such as celluloid collar and cuff buttons,[2] and consists of

1. U.S.P. 162752, 1875. In the process of A. Diss (U.S.P. 278321, 1883) a molding arrangement is described and illustrated, the essence of which is providing a very light, easily manipulated—and to a certain extent self-acting—die, in which the disadvantages of the ordinary heavy molds in cooling slowly and thus consuming time are practically avoided.

2. H. Miller, U.S.P. 488570, 1892. In the operation of the die, the upper section *C* being elevated a suitable distance from the lower section and the hinged portion *E* being closed and locked by means of the lever *H* and link *I*, the celluloid in proper quantity is placed on the lower die section *B* and the section *C* caused to descend until the two sections of the die come into face to face contact and the plastic material is forced into very part of the matrix. The section *C* is then elevated and the hinged portion *E* opened to free the article. It may be expedient

a stationary section containing one part of the matrix and a movable section provided with the remaining part of the matrix and composed of two portions, one being hinged to the other and connected by a link with a hand lever. By this means the hinged portion may be

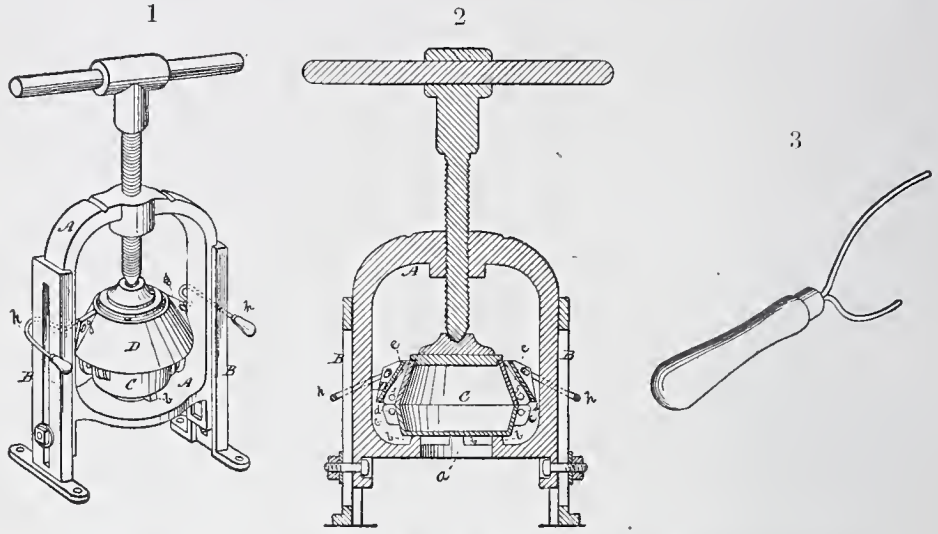

Fig. 205.—The Hunt Apparatus for Softening and Molding Celluloid.

opened or closed and locked in its closed position.[1] Collar and cuff buttons, studs, and similar articles are at present manufactured in this manner.

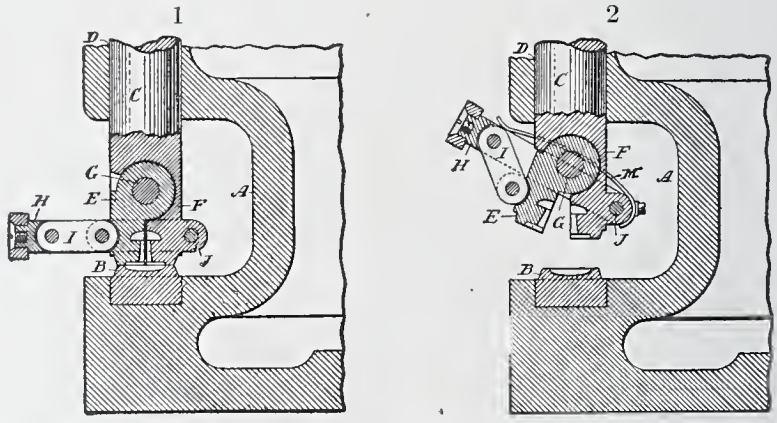

Fig. 206.—Manufaeture of Celluloid Collar and Cuff Buttons.
(Horace Miller's Patent.)

In the production of endless articles such as rings and buckles, which consist of a core covered or coated with plastic material (Fig. 207), the plastic of which the coating is intended to be formed is placed

to have the material heated in order to cause it to flow into all parts of the matrix and issue in satisfactory condition, or to heat the die to faeilitate this result.

1. See proeess for forming buttons by molds and dies, J. Hyatt, U.S.P. 239793, 1881.

in a stuffing box provided with a core nozzle, through which the material is forced to form a tube, the interior diameter corresponding with the exterior diameter of the core to be used, the outer diameter of the tube being somewhat thicker than the finished article. At the mouth of the nozzle is placed a suitably sized knife to slit the material as it issues from the stuffing box. After formation, the tube is cut into pieces, and utilized by encompassing the core. The slit tubing is opened by the operator, made to envelop the core, pressed with the fingers sufficiently to be retained in place, and the enveloped core then placed in a heated press.[1]

In articles typified by a molded boat,[2] the following-described process admits of the formation of an exceedingly thin and light

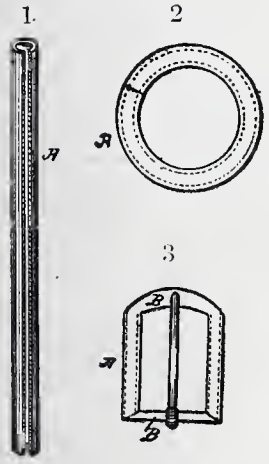

FIG. 207.—Lockwood's Method of Manufacturing Celluloid-Coated Articles.

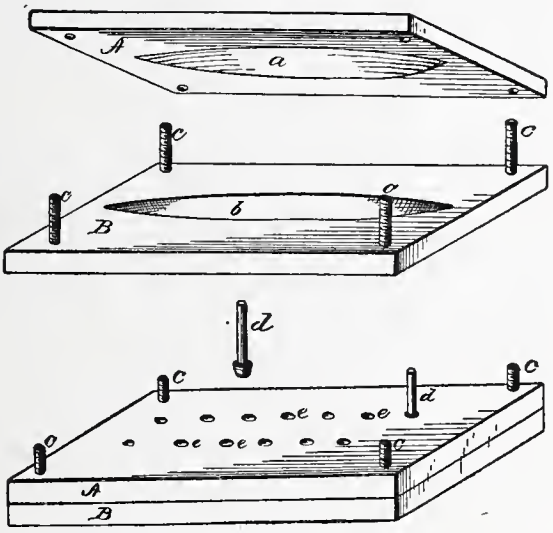

FIG. 208.—Manufacturing Celluloid-Coated Articles by the Davis Patent.

object. The mold is represented by two parts (Fig. 208), *A* and *B*, of metal, where the shape as at *a* in relief and *b* the depression, when properly secured together (as by screw-bolts *c*) the celluloid can be forced into the matrix by means of the screw plungers *d*. The plastic is poured into the matrix, the mold forced tight by means of screws, steam or other heat applied at the proper temperature and for the

1. Process of D. Lockwood, U.S.P. 251260, 1881. In the production of articles of this class it has been customary to form the article by forcing the plastic material into a die or mold in which a core has been supported by pins, and in other instances the piece of material has been united by means of cement and then finished; but these methods are open to objections, by reason of displacements of the core, and difficulties in connecting the lap.

2. M. Davis, U.S.P. 259826, 1882.

desired length of time, when the mold is cooled and the finished object removed.

J. Furman has evolved a mechanism for rapidly producing small one-piece articles [1] such as mouth whistles (Fig. 209), which may be readily adapted to the manufacture of numerous other small articles. There is a space *J*, left between the beveled side of the bottom plate *K*, 2, and the curved sides of the aperture *F* at *L*, in 2, and the curved top of the plunger *G*, and formed when the central plate *D*,

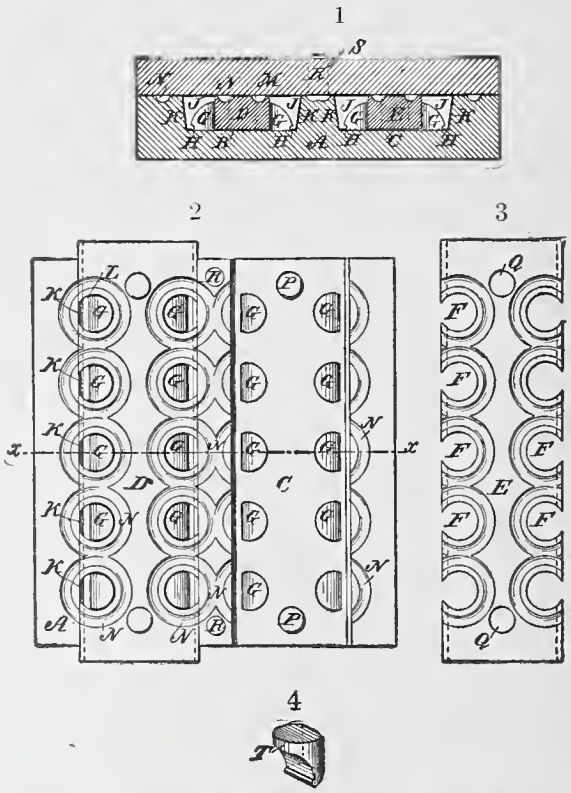

Fig. 209.—The Furman Method of Molding Mouthpieces for Whistles, etc., of Celluloid.

is placed upon the bottom plate *A*. Into this space the celluloid is placed, the top plate *M* firmly pressed upon the central plate *D*, the celluloid being forced to take the form of the opening *J*, any surplus material overflowing into the recesses *N*. When the article has been pressed into shape, the top plate *M* is removed, the central plates *D* and *E* raised, and the finished mouthpieces or whistles *T*, 4, left between the plungers *G*, and the sides *K* of the bottom plate. In order to press a hollow article into shape in a single movement without forming a fin upon the line of junction of the divided

1. U.S.P. 365768, 1887.

dies,[1] Furman prepares a bottom plate *A* (Fig. 210) having in it one or more openings for the insertion of the divided dies, the openings having their sides beveled or inclined toward one another, so that

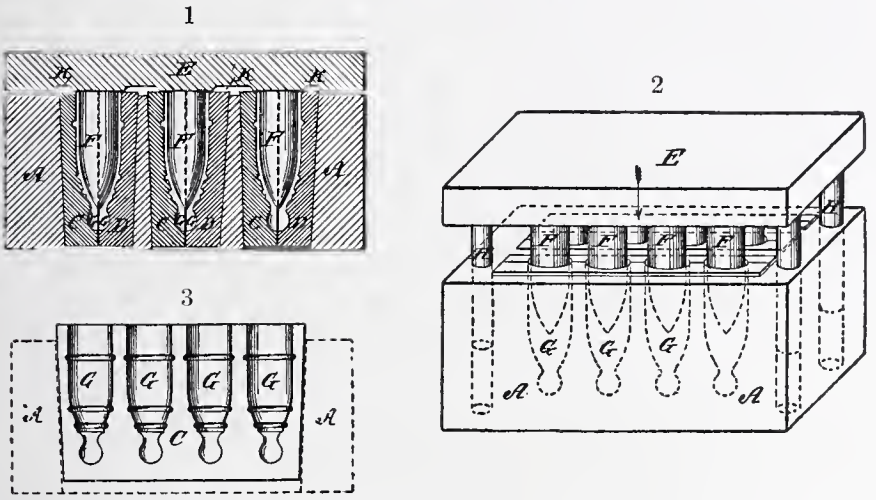

FIG. 210.—Molding Hollow Celluloid Articles According to Furman's Method.

they are smaller at the bottom than at the top of the bottom plate, as shown in the drawings.[2] The exterior form of the article is impressed upon the celluloid by means of the recesses *GG*, cut in the dies, the top

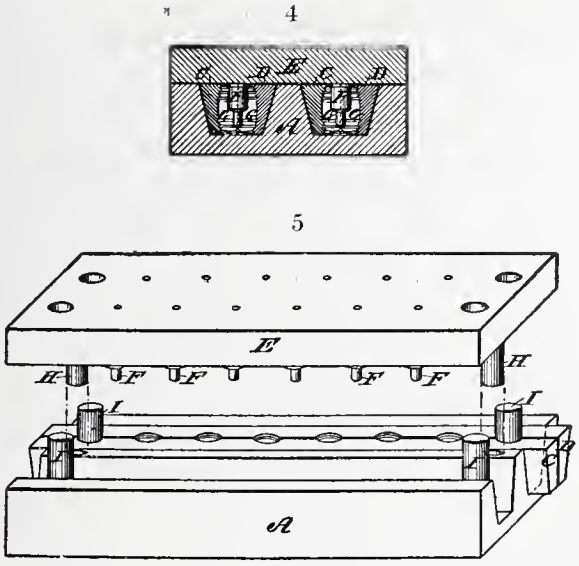

FIG. 211.—Molding Small Celluloid Articles.

plate *E* having depending from it plungers *F*, of suitable form to impress upon the celluloid the interior surface of the article, and also of such

1. U.S.P. 369784, 1887.
2. See also description of process U.S.P. 534445, elsewhere in this work.

form as to be readily withdrawn from the article when the top-plate is raised. When very small articles are to be formed—such as hollow charms—the form of die shown in 4 and 5, Fig. 211, is preferable, because the aperture in the bottom plate extends from end to end, but does not extend through the plate from top to bottom. By means of these devices a large number of articles may be molded at once and the mechanical arrangement is such that the dies may be readily removed from the holding plate.

H. Miller[1] has described an improved machine (Figs. 212, 213, 214), for molding articles from plastic material by heat and pressure, the machine consisting of a frame having a top plate and bottom plate connected by bolts, and having journaled between them a rotating

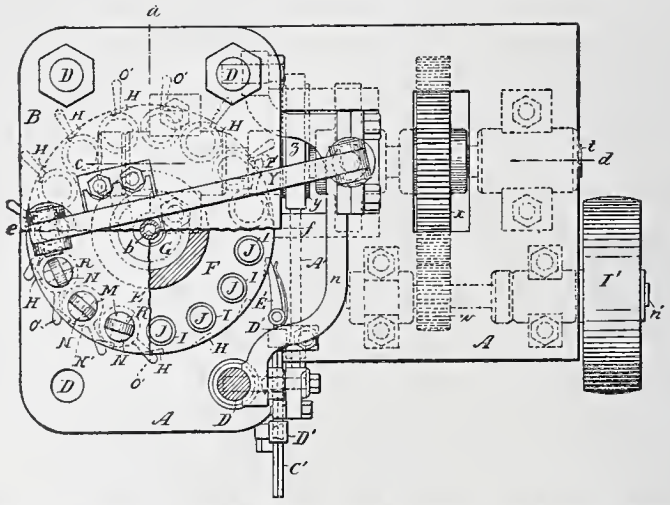

Fig. 212.—The Miller Machine for Molding Pyroxylin Plastics.

multifold die-carrying dial cylinder of appropriate construction, and provided with suitable operative mechanism as shown in the drawings. When the machine is in use the material to be given form is fed upon each die section J as it comes opposite to the feed table T and just prior to the descent of the plunger M above it. Upon the descent of the plunger the material is caught between and pressed into the matrices of the die sections, whereupon the succeeding rotary movement of the dial cylinder moves the closed and locked die with its plunger M toward the pin or arm P', and thus the material in the die is pressed and given the form desired, according to the configuration of the matrices. The dies are successively supplied with the material being treated, and then closed and moved onward

1. U.S.P. 534446, 1895. For detailed description and apparatus for molding plastic material see I. Hyatt, U.S.P. 275216, 1883; Stübling, Cell. Ind., 1904, 5, 9.

under pressure until their plungers *M* ascend and separate the sections of the dies, when the molded articles may be removed. Thus the dies are successively supplied with the material, closed and caused to travel

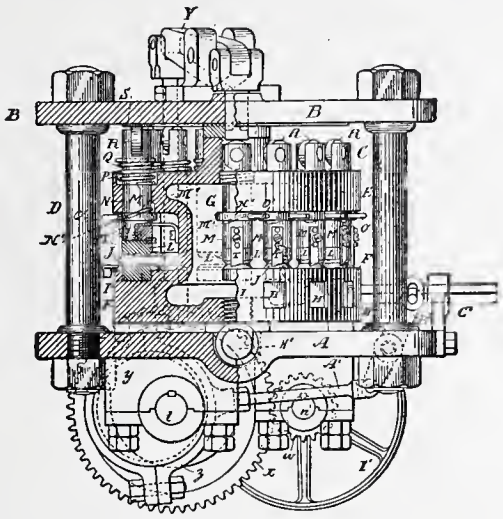

FIG. 213.—The Miller Machine for Molding Pyroxylin Plastic Articles.

under pressure a definite or sufficient length of time and are then opened to permit the withdrawal of the molded articles and the intro-

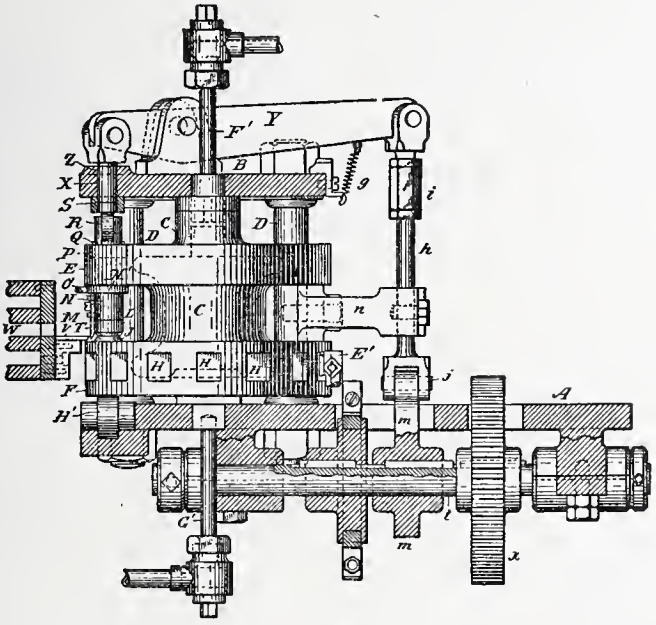

FIG. 214.—The Miller Machine for Molding Pyroxylin Plastic Articles.

duction of additional material during the succeeding revolution of the dial cylinder. This operation is continued until the desired num-

ber of articles of a given form have been produced without interruption, after which the machine is stopped and the die sections removed and sections of different form and construction adapted for the formation of a new line of articles substituted for them. The particular nature and number of the dies will depend largely upon the character of the articles to be produced.

Forming Pyroxylin Plastics into Sheets was first accomplished by passing through heavy rolls, but it was soon noticed that the edges cracked and crazed and in other ways became unmanageable. The first distinct advance made in the formation of sheets is due to J. W. Hyatt, who in 1878,[1] issued what is now known as "Hyatt's Sheeting Patent," in which is described a method of forming sheets by planing from a block of celluloid by methods substantially in use at the present day. Before that time the great obstacle to success in planing or reducing plastic material to sheets was in feeding it to the cutting edge. The material was apt to rise from the supporting surface and ride up the knife, thus either cutting the material irregularly or arresting the operation entirely. Hyatt held the plastic slab firmly upon the sustaining surface pending the operation of shaving or planing into strips, by first causing by heat and pressure the union into a single slab of a number of pieces or sheets of celluloid. The requisite number of sheets were superposed one above the other upon the bed plate of a press having channels or inclined grooves in the surface so arranged that upon pressing the celluloid—rendered plastic by heat admitted as steam by hollow surrounding parts and commencing from the bottom—it would be gradually softened. The pressure tended to drive bubbles of air out, amalgamated the sheets into one mass, and forced the softening mass gradually into the grooves and channels. Pressure and heat were maintained until the air was thoroughly expelled from the material, the next step being the cooling of the plastic mass, still under pressure, by the substitution of cold water for the steam, the former being allowed to circulate until the celluloid has entirely hardened, any lateral shrinkage being prevented by the pressure. The plate and platen, being placed upon non-conducting material, are not affected by the temperature of the adjacent surfaces.[2] The planing or shaving mechanism consists of a frame of any desired strength and construction pro-

1. U.S.P. 199908, 1878; E.P. 2070, 1871; improved in J. Hyatt, U.S.P. 301995, 1884. For "Lacquering Celluloid Films and Sheets," see Phot. Mitth., 1902, **39**, 59.

2. When exposed to the air, the natural shrinkage of celluloid causes the portion which has been forced into the inclined grooves to act as a hook and hold the slab firmly by tension toward the center, against any either lateral or upward movement.

vided with a traveling bed plate and operated by a reciprocating movement. The plate carrying the celluloid slab is advanced under the plane, the knife held immovable, shaving or planing a sheet off. To regulate the cut of the plane, a gauge in the shape of a graduated disk is attached, being operated similarly to the micrometer screw in a compound microscope. The disk is usually graduated into 250 parts, the pitch of the thread of the screw being $\frac{1}{4}$ in., hence a movement of one graduated space on the disk is equivalent to a lowering or raising of the knife edge 1/1000 in. Sheets are usually cut each 5/1000 in. in thickness beginning at 5/1000 in. diameter.

The cutting of sheets in this manner is continued until only a thin film of celluloid is left upon the bed plate, when instead of a repetition of the heat and pressure method just described, a second slab may be cemented on by means of a mixture of amyl acetate and acetone, the solvents causing the block to firmly unite with the film remaining on the plate, the slab thus attached being manipulated the same as though secured upon the plate in the manner first described.

Each sheet after cutting exposes a surface containing volatile solvents, the cutting being usually done upon blocks in their green or unseasoned state, unless the blocks are of considerable thickness. In order to prevent buckling and warping during the loss of the remaining solvent, each sheet is placed in a frame so that its edges are between two iron sections which are clamped together by means of bolts, the sheets being securely held within the frame until thoroughly dry. During this operation it shrinks slightly, which draws it taut and straight across the frame, so that it hardens into a smooth, flat sheet, after which it is withdrawn and is considered finished. Upon this process of Hyatt's, embracing the three operations of attaching, cutting and drying, all subsequent refinements have been based.[1]

1. In U.S.P. 205271, 1878, J. Hyatt has described and illustrated a practical method of affixing a plastic body rigidly upon a core, so that sheets may be subsequently shaved off, the diameter of continuous sheets being adjusted by the rapidity of the rotation of the core, or the speed with which the cutting knife is advanced. See also Berlin Aniline Co., E.P. 9962, 1904; F.P. 349884, 1904; abst. J.S.C.I., 1905, **24**, 248. For the manufacture of celluloid plates by means of the injector of Winderling, see Vierteli. Schr. f. Zahn., 1879, **19**, 224. According to Berlin Aniline Co. (E.P. 9962, 1904) coherent opaque white films or masses are obtained by allowing a solution of pyroxylin, collodion cotton, or celluloid in suitable solvents to evaporate. By varying the concentration of the solutions, it is possible to produce either a brilliant or a dull mass. Colored opaque masses may also be produced by adding a dyestuff to the solution. For example, by allowing a solution of 20 parts of celluloid in 100 parts of ethyl acetate and 120 parts of methyl alcohol to evaporate at the ordinary temperature, a brilliant, white layer, resembling enamel, is produced. A dull white layer, of very fine grain, is obtained by diluting the above solution with 130 parts of methyl alcohol, and allowing it to evaporate. Films or sheets thus produced are suitable for covering glass, wood, leather, or paper, and especially for capping bottles.

The method of drying sheets by attachment in frames admits of but one sheet being dried at a time. In a subsequent improvement, Hyatt was able not only to dry a large number of sheets in a single operation, but to polish them at the same time.[1] A celluloid sheet was first placed upon a piece of polished (preferably nickel-plated) metal, the two being in face-to-face contact. Upon the celluloid is laid a sheet of smooth paper, cloth, or other textile material, which is wetted with a pyroxylin solvent before being laid on the plastic. Upon this is placed another polished sheet, and in this manner a number of sheets built up. The whole is placed in a press, and a pressure of about 250 lb. per sq.in. applied, the pressure and length of application depending on the thickness of the plastic sheets and the number operated upon at one time. The effect of the pressure is to cause the pyroxylin to closely adhere to the polished metal, and the sheet of textile material to be forced into the pyroxylin and unite with it, the two forming, after compression, a single sheet, cloth-backed. The sheet of celluloid still in contact with the polished metal is placed in a heated room or or drying-frame until dry. When removed from the plate the pyroxylin will be found to have acquired a highly polished and brilliant surface, the brilliancy being in direct proportion to the smoothness of the metal plate.[2]

J. Edson's Method [3] of moulding pyroxylin slabs into a rectangular shape of considerable thickness so that they may be sliced into thin sheets, consists in producing the bottom plate of perforated holes filled with pyroxylin, the latter being flush with the surface of the plate and constituting the base upon which the pyroxylin block was fastened, using an alcoholic solution of camphor or other pyroxylin solvent as adhesive.[4] In Edson's method of preparing continuous sheets for the manufacture of collars and cuffs,[5] which has for its object the amassing of several hundred pounds of plastic material upon a

1. U.S.P. 275215, 1883. U.S.P. 221070, 1879, J. Hyatt, contains the first practical description of polishing celluloid sheets by great pressure, a sheet of say 5 sq. ft. being subjected to the enormous pressure of 150 tons. It is to be noted that the successes of J. Hyatt in this field usually include great pressure aided by heat.

2. U.S.P. 205880, 1878, D. Lockwood, describes a method for attaching spiral bands of pyroxylin to a core, the natural tendency of the composition to shrink in the process of drying being overcome by overlapping the edges. As the material shrinks the overlapping edges are drawn down upon those below, and an even shrinkage takes place without any separations.

3. U.S.P. 356108, 1887. For Edson's method of drying pyroxylin sheets by clamping in frames see U.S.P. 277693, 1883.

4. U.S.P. 458157, 1891, F. Eckstein. A substitute for glass of pyroxylin 4–8, acetic ether 100, castor oil 2 and Canada balsam 4–10 (all parts by weight) are mixed together, filtered, and films formed by pouring the solution on glass sheets to dry.

5. U.S.P. 349987, 1886.

mandrel by heat and pressure, the chief feature is the employment of mechanical methods in the entire operation in the place of manual labor.

The apparatus as erected and in position is shown in Fig. 215, the upper washer *L* being removed to introduce the plastic into the space between the mandrel and mold.[1] The space is filled with plastic in the shape of small pieces, care being taken to introduce them in such a manner that the minimum of air spaces is inclosed when the mass coalesces. After filling, heat in the form of steam is introduced into

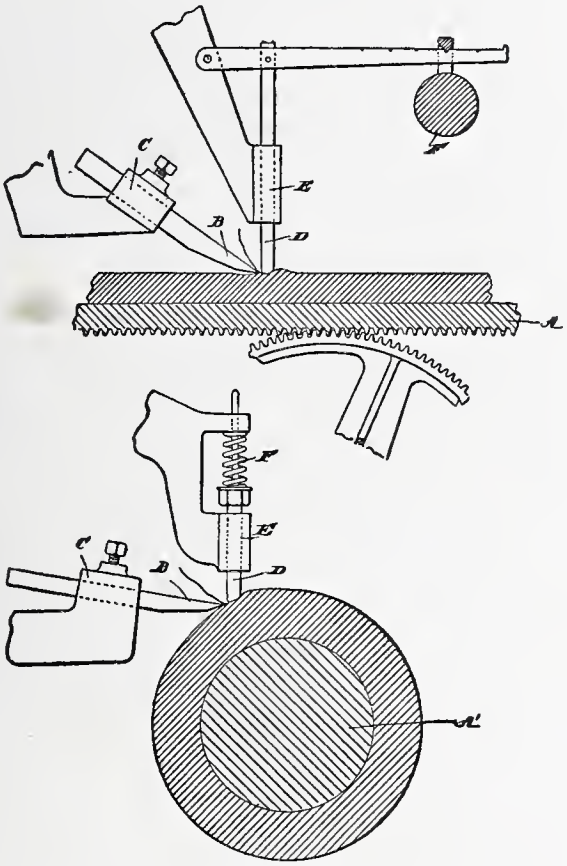

Fig. 215.—The Edson Apparatus for Forming Thin Plastic Sheets.

the center of the core or mandrel, which is hollow for this purpose; the mass softens and becomes workable, and eventually unites into a single, homogeneous mass. This is either allowed to cool in the air, or the hardening facilitated by replacing steam in the core by cold water. Sheets are then cut from the mass in a manner similar to the production of sheeting from rubber or veneer from logs of wood. Pyroxylin sheets prepared in this manner for cuffs and collars are not

1. Similar to E.P. 1908, 1884, J. Dunlop.

required to possess the uniformity, smoothness and freedom from bubbles and insoluble particles that are required of pyroxylin intended for continuous films for photographic work, on account of the high magnification to which the latter is subjected—thus intensifying any imperfections in the film. For preparation of photographic films, which is a distinct branch of the art, see Chapter XVII.

In forming very thin sheets, a device is shown in Fig. 216, where *A* or *A'* represents the supporting bed, *B* the knife mounted in suitable guides, and *D* a pressure bar supported and held in position by springs or weights *F*, so that any required resistance or pressure may be brought to bear on the surface to be cut.[1] The bearing surface of the bar is preferably rounded so that it compresses the pyroxylin just in front of the cutting edge to the exact degree necessary for holding it against the cutting edge, in proportion to the amount of resistance required for the different thicknesses of the sheet to be produced.[2]

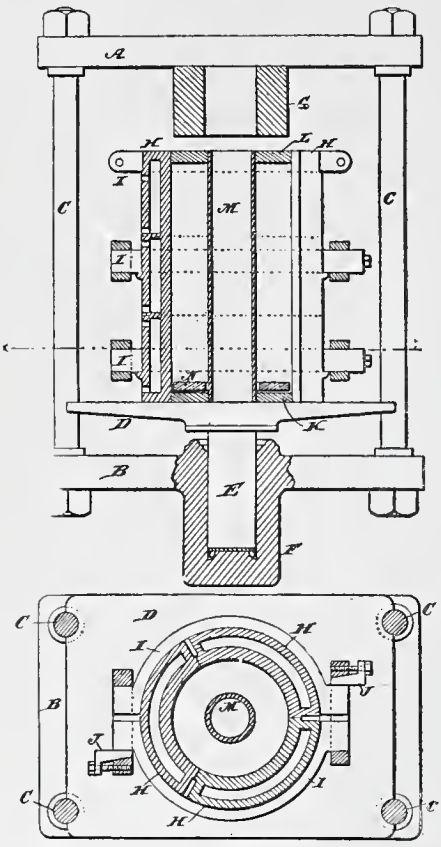

Fig. 216.—Edson's Apparatus for Forming Very Thin Pyroxylin Sheets.

The various finishes, as mat, dull, pebbled, or polished, are made on sheets by means of pressure between warmed surfaces, the roughness or smoothness of which imparts the desired appearance. For automobile window wind-breaks, sheets from 0.015–0.02 in. thick are used, they having the advantage over glass in extreme flexibility, being also practically unbreakable. They occasionally become marred and scratched, but this can be removed by brushing over the

1. U.S.P. 283224, 1883, J. Edson. For method and illustrations of machine for cutting up sheets of pyroxylin plastic, see J. Everding, U.S.P. 286535, 1883. For producing very thin sheets see W. Ker, U.S.P. 826781, 1906; F.P. 366891, 1906; abst. J.S.C.I., 1906, **25**, 1040.

2. That is, the resistance of the pressure bar shall be exactly equal to the density of the material necessary for cutting the desired thickness or thinness, the set screws, being provided with an adjusting device to regulate nicely the proper degree of compression required. For overcoming the variability in thickness of celluloid sheets see J.S.C.I., 1905, **24**, 248; E.P. 9962, 1904.

scratched parts lightly with a mixture of equal parts acetone, amyl alcohol and amyl acetate, with or without the addition of 5–10% camphor.

"Crystalloid," "duroid," "transparene," "litnoid" and "petroid" are trade names applied to paper celluloided, printing being placed on the paper and a thin film (usually 0.005 in.) pressed over this.[1] Lustrous, polished and waterproof signs are thus formed which are very durable. France has described the preparation of these signs in detail, the method consisting in first cutting a sheet of pyroxylin plastic of any thickness, but a little larger in length and width than the paper sheet or print to be covered, or interposed. The paper sheet is laid on the plastic, leaving a uniform margin all around. The print is then surrounded by a narrow pyroxylin strip or frame of about the same thickness as the print, and over this is placed another sheet of plastic of the same size as the lower one. The whole is then welded together by heat and pressure, thus completely inclosing the print. Inasmuch as the pyroxylin sheets are usually very thin, if not reinforced as described above, where the paper or print is of unusual thickness, the unyielding nature of the paper causes the sharp edges to act as cutting surfaces, which often sever the plastic at the edge which it is desired to seal.

Veneering with Pyroxylin comprises the processes of covering articles with thin sheets of celluloid and similar plastics, and subjecting the yielding material to pressure to force the pyroxylin sheet upon the article to cause a perfect union. The yielding material may be fine sand, or preferably putty made with a non-drying, non-siccative oil which by pressure may be made to conform to the shape of the article, irrespective of how irregular that shape may be.[2] In veneering, in general it is preferable to use pyroxylin in the green or unseasoned state on account of greater plasticity and because little, if any, artificial heat is required for adhesion. For this reason, sheets freshly

1. In addition to money saved from the use of very thin celluloid sheets, the natural yellowish tinge of the celluloid is less conspicuous as the diameter of the film decreases. A white, opaque film may be formed from transparent celluloid with no addition of pigment by using the following combination of light-boiling and hygroscopic liquids. Ethyl acetate 100, methyl alcohol 120, with celluloid 20 (all parts by weight) dissolved therein, is evaporated to dryness in moist air, sufficient moisture being taken up to partially throw the pyroxylin out of solution, forming the brilliant white layer, somewhat resembling enamel. A dull, finely grained, white layer may be produced by diluting the above with methyl alcohol 130 parts, before evaporation. K. Collins (U.S.P. 405874, 1889) describes processes for binding celluloid sheets into wallets, card cases, book binding and for similar uses, in which he overcomes the then prevailing impression that celluloid is too refractory to be sewed, by interposing between the plastic sheets an elastic cushion in the shape of a thin strip of leather. By a suitable selection of the thickness of celluloid and leather, articles commercially utilizable were manufactured.

2. U.S.P. 271494 1883, J. McClelland.

shaved from the block have been found to give most satisfactory results. In the arrangement of J. McClelland,[1] Fig. 217, the material to be veneered on both sides is placed on the bed of sand E' with a piece of paper or foil interposed between the sand and pyroxylin sheet in order to prevent the former from adhering to the latter. Over this is laid the article to be veneered, then another sheet of pyroxylin protected from the upper layer of sand and putty. The board F is

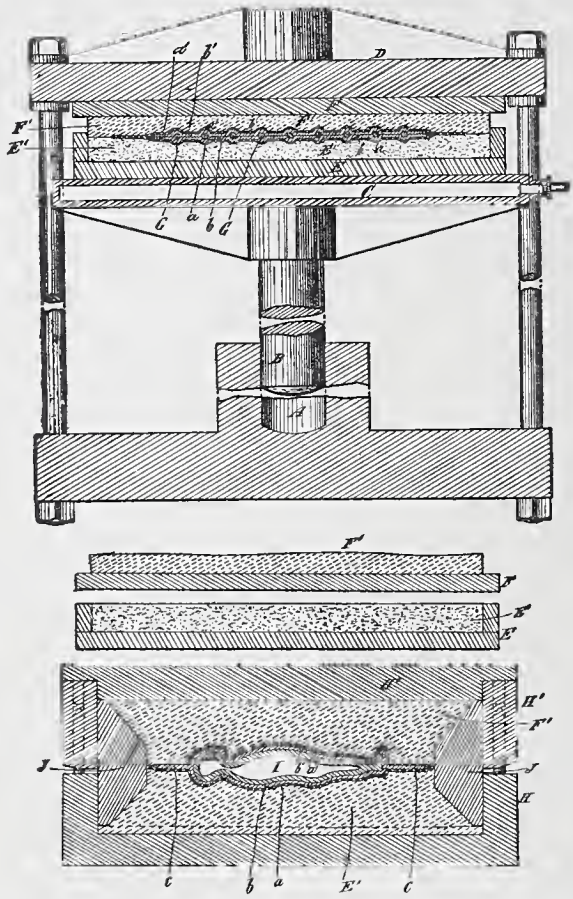

Fig. 217.—Veneering with Pyroxylin, according to McClelland.

inverted, placed over the box E, the whole being placed on the press platen C and subjected to pressure. The pressure, gradually applied, is imparted to the sand or putty and thence to the pyroxylin sheets, causing them to be forced into intimate contact with the article and to the opposite pyroxylin sheet.[2] If heat is to be

1. If the article to be covered is flat and of considerable area, such as a piece of wire cloth or gauze, the entire material may be best inclosed in a box or frame.

2. If the article to be veneered is porous, as wood, it may be first partially fire-proofed by treatment with sodium or ammonium phosphate, ammonium chloride, alum, ferrous sulphate, sodium tungstate or sodium silicate. Where a number

applied [1] the press has a steam table upon which the mold is supported, and by which heat is imparted to the plastic, the heat in the form of steam being replaceable by cold water circulation to chill the plastic after veneering. C. Church [2] combines both vacuum and pressure by first covering the article to be veneered with a sheet of pyroxylin fitted loosely over, inclosing all in an air-tight india-rubber bag, in which the air is exhausted. The atmospheric pressure then fits the sheet closely to the article, which is finally immersed in a fluid, as hot water, and great pressure applied to complete the union while the plastic is in a moldable state. It is stated that no matter how intricate the configuration of the object to be veneered may be, the application of fluid pressure while in a vacuum, aided by the softening influence of heat on the pyroxylin, causes the latter to enter all the interstices of the object. The pressure, being fluid, is exerted in all directions equally, and the conformation to the contour of the object is uniform throughout.

It is evident that the veneering of flat, smooth objects is not a difficult operation, and as in the process of J. Edson [3] consists in simply introducing the object with a pyroxylin sheet on one or both sides between a pair of pressure rolls or similar advancing surfaces, introducing by means of a jet or other appropriate means a small amount of nitrocellulose solvent between the surfaces to be brought into contact. As the rolls revolve and the pressure advances, the object is brought into contact with the pyroxylin under pressure, while the latter is softened by solvent. Or, the solvent may be omitted in unseasoned plastic, and greater pressure aided by heat, substituted.

Stained Celluloid Sheets as a Substitute for Glass. Stained celluloid sheets suitable for signals, identification devices, and for pasting over ordinary colorless window glass to apparently enhance its beauty and value, by imitating leaded glass, may be made either by dipping transparent sheets into an alcoholic or acetone solution

of small articles are to be veneered they may be placed at suitable distances apart between two large sheets of pyroxylin and subjected to pressure at one operation, the material being afterward severed in lines between the articles, leaving each covered on both sides and both edges.

1. U.S.P. 271495, 271496, 1883, J. McClelland.

2. U.S.P. 635917, 1899. With a rubber bag, all seams, creases or ridges are avoided, which, if present, would have to be subsequently removed by sandpapering or polishing. The process of A. Wyman, U.S.P. 892702, 1908, does away with the use of rubber sacks, which under the combined influence of heat and pressure are short lived, and utterly useless when ruptured or having a puncture as minute even as a pinhole. Compressed air, heated if desired, is substituted for the water and rubber, the plastic closely conforming to the contour of the object. The compressed-air apparatus is also much less expensive than a hydraulic press.

3. U.S.P. 289240, 1883. See "Veneering Wood with Transparent Celluloid," D.R.P. 103042; Baugew. Z., 1899, **31**, 246.

of a basic dyestuff of the desired shade, or if one side only is to be stained, the sheet is laid on a flat surface and the dyestuff sprayed on the surface by means of an atomizer until the desired depth of color is obtained. By placing a stenciled pattern over the sheet before spraying, various designs are obtainable, the portions covered by the stencil remaining transparent and uncolored.

Celluloid Sheets for Balloons according to the patented process of J. Field [1] may be prepared of a thickness of less than 0.002 in., and is claimed to be useful for the construction of balloons or other articles the walls of which have to resist the passage of a gas. These thin sheets are made by spreading liquid or pasty celluloid on a glass slab or other support by the motion of an accurately adjustable straight-edge, or of a flexible squeegee formed by the flexible bottom of a trough containing a liquid such as mercury. The sheets of celluloid may be strengthened by incorporating threads of raw silk in their structure, i.e., by stretching the threads across the slabs before spreading the liquid celluloid, or laying them on the surface of the film before it is dry. This in principle is similar to reinforcement of concrete with spiral iron bars.[2]

Polishing Celluloid Sheets is necessary where they are transparent or nearly so, because when first cut from the block or cake it has on its surface fine lines caused by the serrations in the edge of the cutting knife, however sharp or well ground it may be. To remove these knife marks and at the same time straighten and polish the sheet, it is customary to first place them between highly polished (often nickel-plated) metallic plates, and then introduce the sheets into a hydraulic press, where they are subjected to great pressure and sufficient heat to soften the plastic, and cause it to flow slightly. The pressure, driving out all air, causes the sheet to conform to the highly polished surface of the plate against which it is placed, so that when chilled and taken out it is as highly polished as the plate against which it has been pressed. The natural sensitiveness to heat of the sheets sometimes causes them to become discolored during the pressure, and especially if the heat is unduly elevated during the period when heavy pressure is exerted, or if the latter is sustained for a considerable period. The more perfectly seasoned the sheets become before polishing by pressure, the greater the pressure and heat required to remove the knife marks. To avoid this possible discoloration the least exposure to heat is the object aimed at by the workman; but if he allows insufficient time for heating, the knife marks are not entirely obliterated.

1. E.P. 26682, 1908; 16010, 1909.

2. For celluloid films, see Phot. News, 1892, **36**, 86; Jour. of Phot., 1892, **39**, 81; Phot. Mag., 1892, **29**, 133; Sci. Am. Suppl., 1892, **33**, 13530.

To remedy these defects, W. Schmidt [1] proposes to apply to the surface of the sheet sufficient vapor of alcohol to slightly soften it, and render that part so susceptible to pressure that the surface may be polished in the manner just described, but with the use of less heat and pressure, and thus avoid liability to discoloration incident to overheating.[2] In Fig. 218 is shown a perspective drawing of an apparatus suitable for carrying this idea into effect, in which either methyl or ethyl alcohol or acetone is placed in the reservoir 1, heated preferably by a steam coil, the pipe 2 carrying a tube 3, having a fine aperture to allow the vaporized alcohol to pass out, and extending from the reservoir. The sheet of plastic is rapidly passed over the tube through

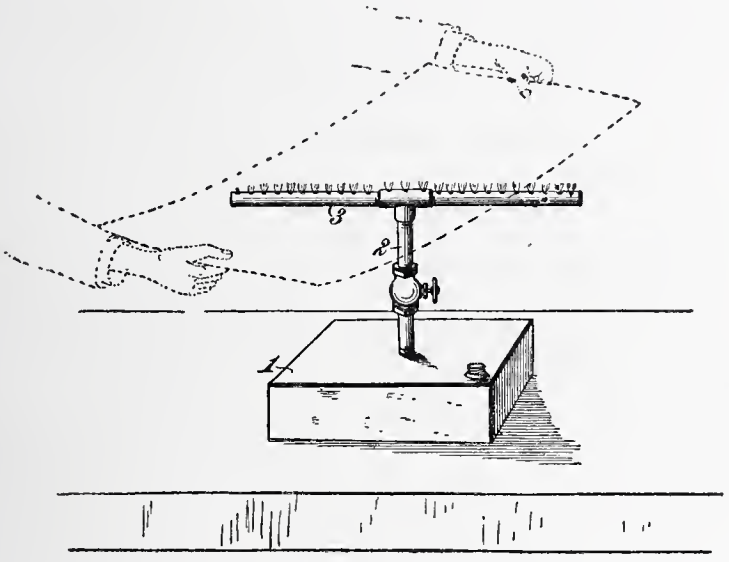

Fig. 218.—Polishing Sheets of Pyroxylin Material (Schmidt's Patent).

the alcohol vapor, and by the glazed appearance of the sheet the operator can see when the operation is finished. When thoroughly softened in this manner, it is claimed less pressure and a lower temperature will produce a surface of the maximum polish and resplendency.

J. Edson [3] previously softens the surface by means of solvent as shown in Fig. 219, in which 1 represents a section of a pair of pressure rolls between which are represented a sheet of the material to be polished and the polishing plate. At 2 is a similar

1. U.S.P. 465784, 1891.

2. It is desirable to use as light a vapor as possible, otherwise the sheet would be brought to a condition almost like that in which it was originally cut, and which is known as "unseasoned." The vapor of alcohol, being highly volatile, quickly passes off and leaves the surface only superficially softened and so that it can be readily manipulated in the subsequent treatment.

3. U.S.P. 289239, 1883, improved in U.S.P. 297770, 1884. See also by Edson, U.S.P. 283224, 289240, 289242, 290553, 1883.

transverse section of the rolls, but with the polishing surface made in a cylindrical form so as to be continuous and not intermittent in operation, as in 1. At *AB* are rolls of some elastic substance like rubber, so that a plate of glass may be passed between them without breaking. The celluloid sheet *C*, fed from the roll *D*, passes in front of a distributing device *E*, which may be either a roller or a tube with jets to distribute a solution which readily dissolves the plastic and which is spread over the surface of the celluloid sheet just before its contact with the polishing plate *F*. This has the effect, as the pressure advances, of expelling the air from the composition, and at the same time compressing and finishing the softened surface so as to

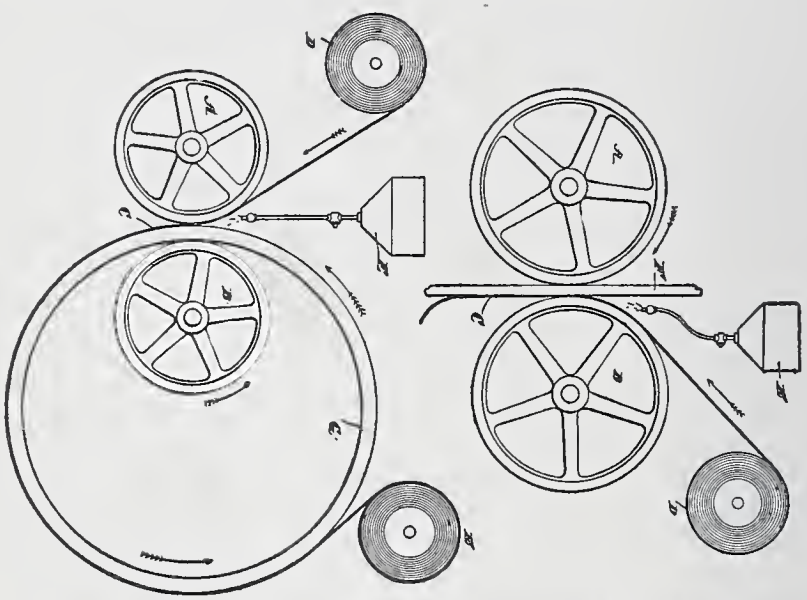

Fig. 219.—The Edson Process for Polishing Sheets of Pyroxylin Plastic.

make it as smooth as the glass plate with which it has been in contact.[1] In polishing continuous sheets as shown in 2, the same relation of devices is used, except that the glass plate is replaced by a cylinder of glass, as at *G*, and mounted between rolls, so that the operation of polishing may be continuous and uniform.

Embossing Celluloid. J. Jarvis[2] has devised a method of embossing thin pyroxylin plastic, in the practice of which either white or colored sheets are taken, and embossed by any suitable method. The

1. See also U.S.P. 221070, 1879. The polishing process of Zeitler is E.P. 8012, 1885; an automatic celluloid polishing machine, is described by Stübling, G. Z. 1905, **19**, 982. For imparting high gloss to celluloid plates, see Z. Bursten, 1906, **25**, 489.

2. U.S.P. 417727, 1889. For article on embossing celluloid, see J. Müller, W. Papierf, 1907, (1) **38**, 28. For embossing in book printing see Graph. Mitt., 1903, **22**, 28.

sheet is then stained with dyestuff—usually by dipping—so that the coloring matter runs into the embossed places of the design and thus makes a deposit of color at the embossed points deeper than that upon the surface. After drying, the sheet may be treated in either one of the following methods: The dried sheet may be polished without pressure until the stain on the surface of the sheet is removed, thus leaving the color in the embossed portion only. By then pressing the sheet flat between hot plates, a polished surface is obtained in which the pattern in colors shows very plainly. Or the sheet may be first pressed with heat which entirely removes the embossed surface, and brings out the deeper staining as a beautiful design, which before pressing was hardly perceptible. The embossing may be by means of wirecloth, dies, rolls or plate press, as described in Chapter XI under Artificial Leather.[1]

Dyeing.[2] Nearly all of the basic organic dyestuffs and many of the acid ones are soluble in methyl and ethyl alcohol, and these solutions can be added to pyroxylin before solidification to form various colored effects. Sheets which are not colored in bulk may be dipped in an alcoholic solution of the dyestuff, the depth of penetration depending on the nature of the dye, the concentration and the penetration of the pyroxylin by the solvent in which the dyestuff is dissolved. Solvents differ widely in their influence on the penetration of dyestuffs in pyroxylin masses, acetone being especially efficient in aiding penetration of basic coloring matters.

Peculiar and striking effects may be produced in dyeing sheets by means of color tests in qualitative inorganic analysis. These in general comprise a salt which is soluble in alcohol and which may therefore be incorporated with the plastic in the process of manufacture, and sheets containing this alcohol-soluble inorganic salt being either dipped in an alcoholic solution of another salt which gives a colored

1. U.S.P. 421367, 1890, W. Wood and G. Gillmore, contains the description of a process of embossing sheets of celluloid by means of a die described as especially applicable for thin sheets.

In the manufacture of poker chips, those made of celluloid entirely are very expensive and have but a limited sale, the majority of poker chips being made of clay and shellac. Where a figure appears in a chip it is usually produced by embossing or cutting out the figure from colored sheets of celluloid about 0.04 inch thick, the figure being actually pressed into the chip by means of steam presses coupled with sufficient heat to soften the chip. "Paranoid" and other brands are prepared in this manner. The celluloid figure is the same on each side of the chip, but the usual supposition that it extends entirely through is erroneous, as may be seen by lifting the edge of the celluloid sheet with the point of a pen-knife. The celluloid used for this purpose is dull finished on the side adhering to the body of the chip, for if smooth it would be much more difficult to hold it in the larger matrix.

2. For methods of dyeing celluloid, see Chem. Centrh., 1893, **1**, 1099; Z. Bürsten, 1898, **17**, 277.

precipitate or color, or the sheet may be dipped in an aqueous solution of the salt which contains sufficient acetic acid (usually 15–30%) to penetrate superficially the pyroxylin and precipitate the colored salt on and in the plastic.

Examples of such combinations are as follows: Column 1, contains the salt soluble in alcohol or other liquid solvent of cellulose nitrate. Column 2, the aqueous or acetic acid solution of the salt in which the sheet is immersed, and Column 3, the color imparted and the precipitate formed.

1	2	3
Potassium iodide	Lead acetate	Yellow lead iodide
" "	Mercuric chloride	Deep red mercuric iodide
" "	Silver nitrate	Light yellow silver iodide
Lead acetate	Potassium chromate	Yellow lead chromate
" "	Sodium phosphate	White lead phosphate
" "	Sodium sulphide	Black lead sulphide
Silver acetate	Potassium chromate	Brick-red silver chromate
" "	Sodium sulphide	Black silver sulphide
Cochineal or carmine	Ammonia	Deep scarlet
Gold chloride (auric)	Stannous chloride	Purple of Cassius
Iron chloride (ferric)	Tannin	Black
" "	Ammonia	Brick-red ferric hydroxide
" "	Potassium ferrocyanide	Blue ferric ferrocyanide
" "	Hematoxylin	Black
" "	Salicylic acid	Purple (fugitive)
Copper acetate	Ammonia	Blue
" "	Potassium ferrocyanide	Brown cupric ferrocyanide
" "	Sodium sulphide	Black cupric sulphide
Cadmium chloride	" "	Yellow cadmium sulphide
Arsenous acid	" "	Yellow arsenous sulphide
Antimonic chloride	" "	Orange antimonic sulphide
Chromic chloride	" "	Green chromic hydroxide
Manganous chloride	" "	Pink manganous sulphide
Zinc acetate	" "	White zinc sulphide
Nickel chloride	Oxalic acid	Green nickel oxalate

If the surface of celluloid be partially colored by immersion in a solution of a dyestuff and then washed and dried, it is found that by a brief second immersion in a different-colored solution, the uncolored portion can be dyed, without the shade of the colored part being much affected, and upon this observation is based a process for preparing multicolored surfaces by direct dyeing.[1] After the second and subsequent immersions in the dyestuff solution, it is preferable to at once wash the material in a medium in which it cannot be dyed, celluloid being preferably washed in water. It is stated that this method can be applied to the preparation of three-color gratings.

1. Verein. Kunstseidefabr. A-G., F.P. 395165, 1908.

Haskell's Finishing Process. In a recently described process of H. L. Haskell,[1] a method of coating or finishing with celluloid is given, by which an article may be completely coated without any break or joint showing, irrespective of its shape. The process, which is illustrated in Fig. 220, is preferably carried out in a room in which the moisture in the atmosphere has been removed, as by an exhaust fan, the temperature being kept at 15° or below. A thick solution of the celluloid is made, the article to be finished first dipped into the solvent, and then into the celluloid solution before the solvent has had time to evaporate.[2] The surplus is allowed to drain off, and the article then mounted upon a slowly revolving wheel, which is revolved until the lacquer has dried.[3]

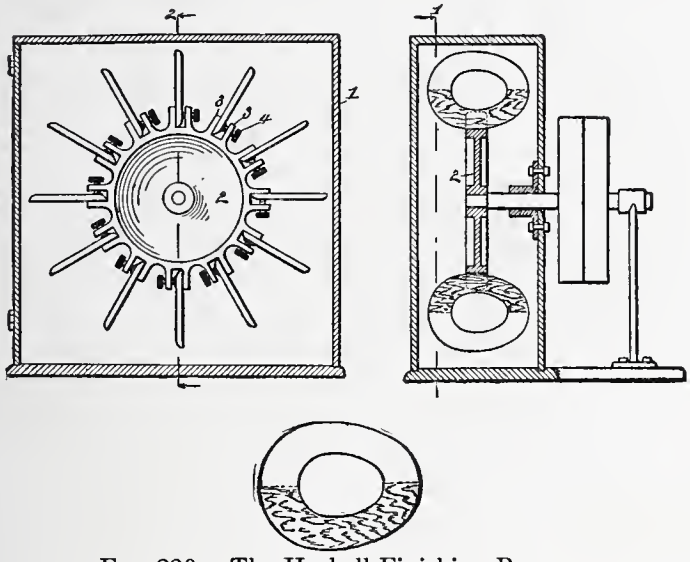

FIG. 220.—The Haskell Finishing Process.

After the article is coated, it may be finished or polished by sanding and dipping into solvent. If the coating is colorless, the grain of the

1. U.S.P. 935603, 1909.

2. It is suggested that a portion only be coated at a time, so that the article may be readily handled without touching the dipped or undried portion.

3. By mounting the article upon a wheel, the draining off or settling of the coating to one side is prevented, so that a uniform covering may be obtained. The wheel 2 is arranged within the casing 1, which prevents too rapid drying from evaporation of solvent. As shown in the drawing, the wheel is provided with outwardly projecting clamping members arranged for securing the article in place during hardening of the coating. The object of carrying out the process in a dry atmosphere is probably to admit of the use of hygroscopic fluids, as ethyl acetate or acetone. When a solvent of this nature is used in a moist atmosphere, too rapid evaporation of solvent is apt to cause pit-like dents on the surface and the film may turn opaque and whitish, when it will be found to have lost its strength, and the subsequent application of solvents will not restore the resplendent and transparent appearance. A smooth surface may be formed by smoothing up the joint by painting on a high boiling pyroxylin solvent, as amyl acetate.

wood shows through, giving the surface a varnished appearance. The protection of the wood in this manner with an impervious coating is said to be of especial value as coating for watercloset seats, covers, tanks, and the like. Antiseptics may be added to the coating composition to increase the sanitation.

Factitious Ivory. Of the various moldable substances which have from time to time been suggested as substitutes for ivory [1] and other rare and costly materials, the pyroxylin plastics have proven much the superior. An endless variety of variegated and multicolored effects are possible and are produced in a manner similar to the formation of ivory, marble, carnelian, mosaic, horn, tortoise shell, amber, onyx, and similar beautiful natural products. Their development to the present-day perfection is the result of an immense amount of experimentation, and has called for the exercise of great patience and ingenuity.

Parkes [2] was the first to describe a method of imitating ivory and pearl, and thus laid the basis on which future experiments were conducted. The first dependable results obtained were by the use of bone-dust, and are described in a series of patents issued to the Hyatts and others in the United States under the name of "Bonsilate."[3] Bonedust was welded by heat and pressure aided by a solid solvent of the bonedust, as salicylic or benzoic acid or other similar crystallizable body. These patents utilized to the utmost the effect of heat and pressure—the two factors underlying the modern manufacture of celluloid. Imitations of horn and ivory in the formation of buttons, billiard balls, knife handles, and egg spoons were made in large quantities, but the imitation of ivory lacked in one important respect—the absence of the graining or striations, which are supposed to indicate successive annual growths in the tusk.[4]

1. That modification of dentine or tooth substance which in a transverse section shows lines of different colors running in circular arcs, and forming by their decussation minute, lozenge-shaped spaces, and which is represented by every portion of any transverse section of an elephant's tusk, is true ivory, the above distinguishing it from every other substance.

2. E.P. 2709, 1866. W. Welling, U.S.P. 17949, 1857, used shellac, ivory dust and camphor.

3. U.S.P. 133229, 1872; 156354, 1874; 236034, 1880; 239794, 1881; abst. J.S.C.I., 1882, **1**, 217. The method was to take ivory dust 2, pyroxylin 2, camphor 1 (all parts by weight) all thoroughly mixed by grinding; water-expelled solvent added and pressed in a cylinder or mold under heavy pressure and at a temperature of 75–125°. See also Depont and Story, E.P. 9267, 1889, where lime, phosphoric acid, calcium carbonate, magnesia, alumina, gelatin and albumen are kneaded together, the resulting mixture having also the chemical composition of ivory. It is claimed that the mixture after maturing for some weeks, can be cut, turned and polished in the ordinary way. See also E.P. 18090, 1889; abst. J.S.C.I., 1890, 9, 199.

4. Cf. W. Krug, U.S.P. 648415, 1900. See F. Cottrell, U.S.P. 254280, 1882; E.P. 3376, 1881, for manufacture of "Material to form Artificial Ivory."

J. Edson [1] was the first to obtain a patent for a process of imitating the peculiar laminated structure of real ivory by a plastic. A careful examination of a piece of ivory will show that the more transparent laminæ are about half the diameter (calculating from center to circumference) of the whiter, more opaque striæ. By superposing upon each other, sheets of plastic of varying density, opacity, and color as regards amount of pigment therein, warming the mass until softened and then rolling on a heavy friction or calendar roll, the striations were more or less perfectly brought out. Under combined heat and pressure, it was found that the sheets would sometimes crack at the edges when passing through the rolls, but Stevens overcame this defect [2] by automatically moistening the edges with a solvent just before they passed under the rollers.[3] The next advance was the building up of transparent and translucent layers as before, making a solid block by heat and pressure, then cutting strips transverse to the original sheets. This is the method used at the present day, subsequent refinements being in the nature of improvement of the general shade or color of the laminæ so as to more nearly approach the appearance of natural ivory. It will be recognized that the procurement of these delicate degrees of shade and translucency are matters of great nicety and judgment.[4] In natural ivory there are present certain irregularities or "knots" in the "grain," corresponding in appearance to the annular rings around a knot of wood. To obtain this, one method is to roll a thin sheet of plastic several times, or make several folds, and include this at any point between the sheets, the great pressure blending the folded portion with the sheets, when

1. U.S.P. 283225, 1883; E.P. 3930, 1884; abst. J.S.C.I., 1884, **3**, 376. While Edson believed he discovered the art of artificial ivory manufacture, it is related that he and the U.S. Patent Office were much surprised to find subsequently that Parkes had anticipated him by at least fifteen years. The latter obtained the artificial ivory by rolling out semitransparent sheets with sheets containing pigment, uniting them by a more fluid solution. To get the "crooked graining," Parkes twisted these strips of united sheets and then pressed them together again.

2. U.S.P. 300158, 1884.

3. Cf. G. Davey, E.P. 1443, 1872.

4. In the preparation of this fictitious grain, at least two lots of plastic are prepared, differing from each other in color, etc., to such an extent that when combined and subsequently reduced to the ultimate, the individual characteristics forming the integral parts of the "grain" shall be such as to best approach the appearance of the product formed by nature. Account has to be taken into consideration of the pyroxylin, which in practice is never white or sufficiently opaque, but possesses a shade more nearly like that of horn, and this horn shade varies so much in different "batches" or "bleaches" that a selection of a suitable batch becomes an important preliminary factor. Usually the upsetting of the grain caused by the small amount of flow of the material in taking the mold or by pressure, causes sufficient disturbance to the initial regularity of the grain to avoid monotony, take away the mechanical appearance, and give a wavy and pleasing effect. About 5% and 0.5% respectively of zinc oxide is the amount of pigment usually placed in the two different sheets. U.S.P. 307032, 309831, 1884.

upon making transverse sections, the apparently interrupted striations are clearly brought out.

In the patented method of C. Chickering,[1] shown in Fig. 221, producing imitation of "grain ivory without flaw or blemish," in the form of rods and tubes, is claimed. The celluloid having first been cut into strips of proper size for the formation of tubes as regards length and diameter, the longitudinal edges of each strip are beveled on alternate sides as shown at *a a*, at 1 and 2, so that when brought together they will overlap, thereby producing a tube of uniform thick-

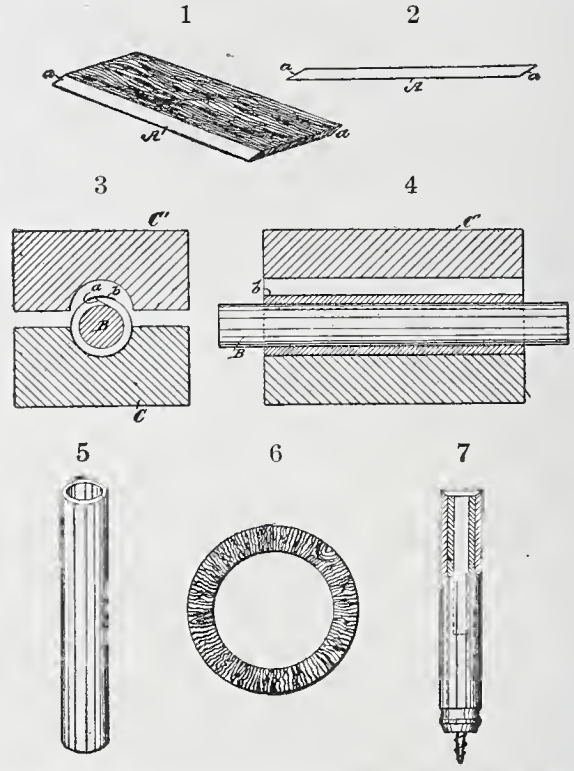

Fig. 221.—Manufacturing Celluloid Articles, according to the Method of Chickering.

ness and having a close-fitting seam that is not liable to separate. The strip *A*, before bending, is rendered flexible by heat, and is then rolled around the mandrel *B* into approximately the desired round, oval, square, or tubular form, and with the beveled edges *a a* nearly or quite in contact. The mandrel *B*, with its surrounding tubular strip, is then placed in the lower part or half of a sectional mold or die, *C*, of approximate shape, as shown in 3 and 4. In placing the mandrel and tube within the die it is preferable to arrange the seam uppermost and apply a cement solvent—such as spirits of camphor or

1. U.S.P. 329273, 1885.

wood alcohol; to the beveled edges of the seam a strip, *b*, of paper or other suitable material is usually applied over the seam to prevent the solvent from spreading too rapidly, and also present an obstacle to the entrance of dirt, dust, or extraneous matter which is apt to adhere to the interior of the die. The upper half, *C'*, of the die is now brought down onto the tube and its inclosed mandrel and suitable pressure exerted upon the die, heat being preferable, and subjected to adequate pressure with the pyroxylin in contact with the mandrel. The tube will by these means take the desired form without impairing the grain of the material, and the seam at the overlapping edges *a a* will be accurately and permanently closed, thereby leaving no unsightly ridges and incurring no risk of separation. The process as described is most applicable to what is termed "seasoned material"; but by using "green material," which has not undergone the process of curing, the cement or solvent may be dispensed with, as the process of welding is easier effected with such material than with seasoned material. The beveled edges may in such case also be dispensed with. After remaining in the die a sufficient length of time to become set, the tube and its mandrel are withdrawn and detached. The tube is now ready for finishing by polishing or otherwise. By providing the interior of the die with suitable designs a corresponding ornamentation will be impressed on the tubes while being formed. After the tubes are removed from the die and polished they are ready for the market, and are available as handles for canes, umbrellas, parasols, whisks, brushes, whips, and many other articles.

Where it is desired to produce rings resembling ivory from celluloid Emil Kipper's method,[1] shown in Fig. 222, may be used. By referring to the drawings, it will be noted that the numeral 1 indicates the bottom or base of the die or mold, and 2 the top or cover, each part being provided on its interior surface with a series of semicircular recesses, 3, joining each other by annular sharp or V-shaped edges 4, all in such manner that when the two parts of the die are brought together the recesses and sharp edges will coincide with each other and form a series of separated annular channels—square or angular for one portion and semicircular for the other portion. The mandrel 5 is provided with a smooth or plane-faced cylindrical surface, 6, and at its ends is supported in orifices in end washers or heads, 7, which are confined in place by nuts 8, or other fastening devices, engaging with the projecting ends of the mandrel. The pyroxylin, 9, to be made into solid rings is placed around the mandrel. It may be a complete tube drawn upon the mandrel; or it may be a rectilinear sheet, made

1. U.S.P. 335935, 1886.

to encompass the mandrel, and its meeting edges welded together by pressure in the two-part die; or it may be flowed about the mandrel, or in the form of two separate sheets caused to encompass the mandrel and welded at the meeting edges during the pressing operation; but in order to produce stratified products pyroxylin compounds are used in which the sheets are made up by stratification, so as to produce linear shades in the surface of the article to resemble natural ivory. After the material is placed upon the mandrel the two-part die is subjected to heat and pressure to convert the plastic into a seamless tube and produce on the surface a series of connected annular curved ribs or projections, 10, and a series of depressed lines, 11, all concentric with each other, while the interior surface of the tube will remain perfectly flat or square, by

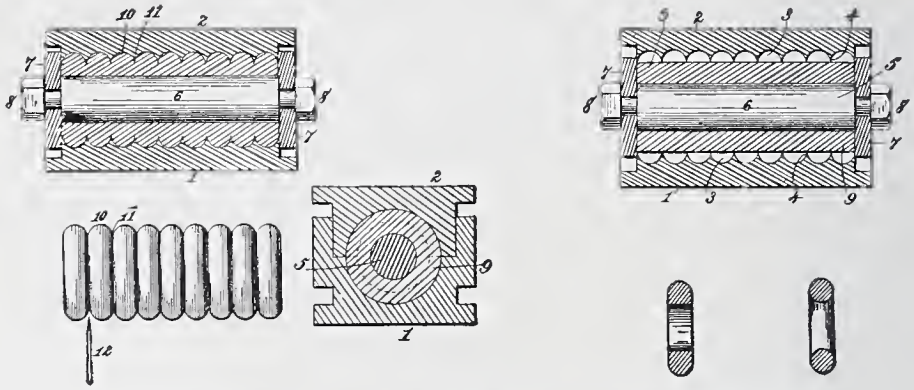

Fig. 222.—The Kipper Method of Forming Solid Celluloid Rings.

reason of the plane or smooth surface to the cylindrical mandrel. The die is then separated and the ribbed tube removed and placed in a lathe, so that by presenting a cutter or knife, 12, Fig. 222, to the depressed lines 11 and revolving the tube the latter will be subdivided into detached rings, each having a semicircular periphery and a squared interior, as shown. The squared inner surface of each annulus thus produced is then turned off by a cutter, thus finishing the article and producing solid rings, which are round or circular in cross-section.

Another simple and effective method of decorating the surface of celluloid to imitate "grain ivory" is to dip the sheets containing the zinc oxide pigment momentarily into dilute nitric acid, then washing and drying. The acid, it is stated, dissolves the zinc oxide on the surface of the thin sheet, and when such sheets are pressed together, the dissolved portion much resembles the lighter, more translucent

portion of ivory.[1] The processes of Best,[2] Merian,[3] Greening,[4] H. Franquet,[5] and T. Didier [6] contain slight modifications of the foregoing general method.

Artificial Horn. As is well known, the horn of the ox, buffalo, sheep, goat, and other animals, consists of a central, intermediate and exterior portion nested together, each portion comprising an irregular body having undulating streaks, fine variegated lines, and mottled spots, so that when the horn is cut and polished it presents a decidedly characteristic marbled, clouded, or watered appearance, having the lines of color radiating from the top or point of the horn. In the production of small articles as buttons, the horns of animals are usually first softened by steeping in water, then cut or worked by placing in a chuck and pressed into the required form, after which they are polished for use. In the adaptation of horn for use in large masses such as umbrella or cane handles, one of the principal objections has been the difficulty experienced in procuring horn long enough and sufficiently solid for the purpose. Even when it has been possible to obtain pieces of such large size the cost is so great as to make its use prohibitive for any but the more expensive articles.

W. Harvey[7] has invented a process of producing artificial horn having the characteristic structure and marbled, clouded, and watered appearance of the natural growth, and of any size or dimension. The invention consists in methods forming an artificial horn of pyroxylin plastic having partly colored or variegated and lined strata, and this is possible by causing the lines or striæ to align with the colored portions and overlap each other in a bar, rod or other conically formed mass (Fig. 223). This is arranged so that the spots of color and lines of union of the sheets appear disposed around the center of the material as in the natural horn.[8] A sheet of celluloid having layers or strata of

1. U.S.P. 360811, 1887. The claim is made that the nitric acid will sufficiently dissolve the pigment from the outside portion of each sheet to obtain the appearance of the less opaque laminations of ivory.

2. E.P. 15121, 1884; abst. J.S.C.I., 1885, **4**, 751. Magnesium borate 12.5–25% of weight of pyroxylin is added to decrease the inflammability.

3. E.P. 10765, 1884; abst. J.S.C.I., 1885, **4**, 507. See E.P. 12451, 1896.

4. E.P. 2481, 1883.

5. E.P. 11981, 1901; F.P. 312846, 1902; abst. J.S.C.I., 1902, **21**, 134.

6. F.P. 336970, 1903; First Addition dated Oct. 28, 1904; E.P. 22245, 1904; abst. J.S.C.I., 1904, **23**, 453. The base is obtained by combining celluloid 20, acetone 40, 95% alcohol 40, castor oil 5 (all parts by weight). See Maskell, "Ivories." (New York, 1905).

7. U.S.P. 460086, 1891. E. Jetters' process (U.S.P. 749297, 1904) consists in first saturating rawhide with glue and then with a glacial acetic acid solution of pyroxylin. The mass is then dried and saturated with aluminum chloride.

8. 1, Fig. 223, is a top or plan view of a sheet of celluloid, colored, spotted, and lined or striped and adapted to be worked into the required form. 2 is a similar view of a triangular-shaped piece. 3 is a perspective view of several cones of uniform sizes and respectively colored and united so as to constitute an integral rod or

spots, colors or lines, as brown, gray, light-smoke, ivory, white, olive green, dark-smoke, transparent, translucent, opaque, etc., placed on them by means of an amyl acetate or acetic acid solution of the usual acid or basic dyestuffs, is rolled over a slightly heated cone into conical form, a number of such cones being placed one within the other as indicated in the figures. Before the insertion of each cone, its exterior is dipped in pyroxylin solvent, so that when the building up

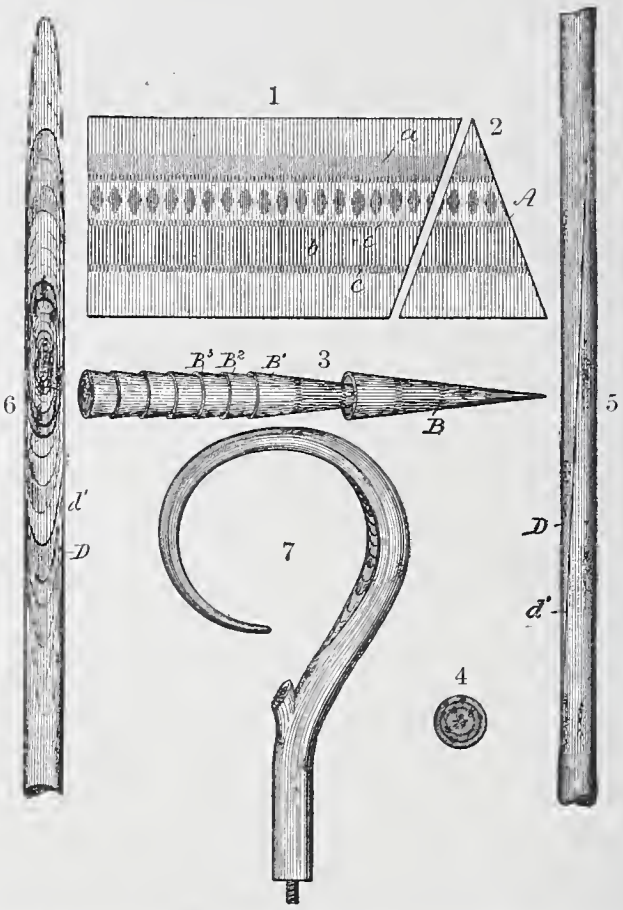

Fig. 223.—The Harvey Process for Producing Artificial Horn from Celluloid.

process has been completed, a single member will be formed of the agglutinated cones as a solid laminated body, closely resembling natural horn both in structure and color effect. To make, say, an

other figure closely resembling natural horn. 4 is a transverse sectional view of several cones colored, lined and united. 5 is a view in elevation of a rod composed of a series of laminated cones suitably turned off at the points of union of one cone with the other and forming a rod. 6 is a view in elevation, showing a rod cut obliquely in order to show the internal grain or nerve tissues in imitation of natural horn; and 7 is a similar view showing the hooked handle of the umbrella stick formed by bending and shaping the obliquely cut bar or rod illustrated in 5 or 6.

artificial horn handle for an umbrella stick, the bar is cut obliquely as shown at *d'* in 5, which exposes the oblique portions of the rods, and gives the appearance of horn sawed angularly, thus heightening the natural effect. Heating the rod induces plasticity, and it is then curved or otherwise molded.

Tortoise Shell Imitations. Natural tortoise shell is the name properly applied to that semitransparent and mottled material of the scales covering the carapace of the hawksbill—a marine turtle found in all tropical seas. In this species the thirteen shield plates do not join at the edges, but overlap posteriorly, the larger central ones being 6–8 in. broad, those from a large turtle weighing 7–8 lbs. They are rarely thick enough to serve the ornamental purposes to which they are put, but may be welded together when boiled in oil or water. With tortoise shell articles of Oriental manufacture these welds can usually be detected by the irregular but beautiful pattern.

Of all the substances proposed of which to make factitious tortoise shell, the pyroxylin plastics have been found much the superior, the dyeing being the most important and difficult part. The ground color of true tortoise is a light yellowish brown, closely approximated by adding an alcoholic solution of sudan G or GG, dyestuff to pyroxylin during conversion, the mass being dyed homogeneous throughout. The reddish-brown transparent patches, characteristic of true tortoise, are obtained by adding small amounts of a saturated alcoholic solution of the various sudan browns and reds by means of a dropping burette on the sheets, or by spraying with an atomizer over the surface of the plastic softened by heat. More natural effects are obtained by treating unseasoned plastic in order that deep penetration of dyestuff may take place so that the colors gradually blend into the lighter matrix. This may be assured by piling sheets of colored celluloid on each other, applying heat and pressure very gradually for several hours (if necessary) in order to permeate the plastic mass with the darker colored dyestuffs. For use in China and Japan in expensive inlaid furniture and other work, metallic incrustations consisting of tin and silver foil and powder, gold or silver stars, medallions, crosses, and other designs are introduced into the plastic celluloid and rolled or otherwise mixed to thoroughly disseminate the incrustation uniformly throughout the mass. Spill [1] was the first to describe a process of artificial tortoise-shell manufacture, his method being to build up a series of thin slabs of the material of two or more colors, causing them to blend into each other by passing through heated rolls. Hand coloring of the light-yellow celluloid sheets is also practiced, and

1. E.P. 1739, 1875.

when skillfully done it is said to be almost impossible to distinguish the true from the artificial by inspection alone.

Imitation Pearl. In order to produce that peculiar iridescent nacreous appearance of natural pearl, G. Mowbray [1] mixes with the plastic mass finely ground or rasped mica, sifting the material over the converted pyroxylin, after which the entire mass is thoroughly mixed. Certain fluorescent dyestuffs, the eosines, erythrosines, rhodamines, erthyrolitmin or uranin, especially the latter, may be added in very small amounts to give a dichroic effect and to increase the iridescence. The fluorescent dyestuffs in solution in wood alcohol or acetone are sprayed onto the plastic compound by means of an atomizer just before it has been submitted to the rolling process. It is stated that with this method the mass can be made to assume a very beautiful appearance, the variety and play of colors, the sparkling reflections of the mica, and the translucent pyroxylin each contributing to the result. Another method consists in preparing either transparent, colored or opaque pyroxylin sheets, sifting over the surface extremely minute scales of mica and then superimposing another thin transparent pyroxylin sheet and subjecting the two sheets to warmth and pressure.[2]

It is well known that calcium and barium sulphides and other materials by being exposed to daylight or strong artificial light have excited in them a molecular action which produces phosphorescence, so that they are rendered luminous in the dark. It is claimed that the addition of small amounts of phosphorescent material tends to impart that peculiar sheen noticeable in real pearls, and adds greatly to the deceptive effect.[3]

Artificial Coral.[4] Beyond their general utility and usefulness as sources of lime, none of the corals have an industrial value except the red or precious coral (Corallium rubrum) of the Mediterranean, and this has from remote times been highly prized for jewelry, personal ornamentation, and decorative purposes generally.[5] In

1. U.S.P. 294661, 1884.

2. The superimposed sheet should, of course, be as thin and transparent as possible in order to obtain the best effects. Both the natural transparent mica and that which has been previously heated until it exhibits a silvery appearance may be used. Other scintillating materials, powdered glass, electrolytic carbides, borides and silicides also suggest themselves as being useful,

3. I. Drummond, U.S.P. 248413, 1881; see also F.P. 324894, 1902.

4. Polyps have a cylindrical form of body with a mouth at one extremity, and are permanently united at the base; when stony, they are called corals—which are only aggregated polyps. The framework is secreted by the animal tissues as bones are, and not by any conscious power of the polyp. The Actinoid polyps form ordinary corals, and the Alcyonoid polyps the Gorgonia or Alcyonium corals; the red variety used in jewelry is the stem or axis of the Alcyonoid. Some of the most valuable limestones and beautiful marbles were formed entirely by polyps—the most indefatigable rock builders in existence.

5. This is chiefly obtained from the Mediterranean, where it is brought up

duplicating the appearance of this coral, the three points to imitate are the form, color, and hardness, in order that, like the natural product, it may be susceptible of taking a high polish. The form is exactly duplicated by producing an electro from natural coral, and using this form as a mold in which to place the softened plastic to harden; the color may be closely matched by means of litharge and vermilion; the hardness by a combination of resins with the plastic as explained under camphor substitutes. The pigment is ground with the pyroxylin before conversion, and after seasoning pieces are warmed and molded, and when dry, polished by a woolen cloth and Venetian red, or by ragging with emery powder in an ordinary buffing machine. The holes are bored in the coral with an ordinary drill after the pieces have become cold.

Black coral (Antipathes), the axis of which is more solid, is still more highly prized and may be imitated in a similar manner by substituting lampblack for the pigment, and adding a spirit-soluble nigrosine to give the jet polished appearance.

Imitation Amber of pyroxylin plastic is extensively used for the bits of pipe stems, and consists of ordinary plastic containing yellow to brown dyestuffs, picric acid, ammonium picrate or the sudan series of yellow, gold and brown dyestuffs being used to impart the desired shade. The dyestuffs are dissolved in the alcohol added to the camphor before conversion of the pyroxylin. In natural amber and other fossil resins appear small translucent or opaque patches, usually of a lighter color than the resin in amber, due to the crystallization of succinic acid. To imitate this appearance, lighter-colored plastic in small pieces and containing pigments is rolled with the amber-colored sheets. The reason for the tendency of some manufacturers' products of this material becoming cloudy progressively after long standing has never been satisfactorily explained.

Imitation Marble from pyroxylin plastics is usually produced by one or the other of the two following-described processes: In Fig. 224 at 1 is shown several pieces of solid pyroxylin dyed with ordinary basic colors, such as fuchsine, auramine, methyl blues and violets, victoria green, and bismark brown. 2 represents a portion of a sheet formed by these pieces by calendering, and 3 a section of sheet cut or planed from a block of pyroxylin produced from a number of sheets piled on each other and welded into a homogeneous mass by heat and pressure. The pyroxylin blocks are first

from considerable depths by means of a sort of grappling apparatus dragged after a boat, the pieces being broken from the bottom by means of weights attached to the grapplers. In China large spheres of good coral command high prices, being in great requisition for the button of office worn by the mandarins.

cut in suitable sizes, each color being kept separate, the blocks being dyed by immersion in an ethyl alcohol or acetic acid solution of the dyestuff, the penetration of the color being only superficial. After dyeing they are immediately placed in the calendering machine until they are united. A number of these are then placed in the press, and cut transversely to the sheet surface. Usually the fine thin films of coloring matter present the appearance of silicate markings separating the different colors and running in many directions irregularly, disappearing at some points and reappearing again, the varied markings and the solid colors being mingled with all the infinite variety of blending seen in the more highly prized marbles. By a proper selection of tints in the dyestuffs used and the size of the pyroxylin blocks dyed, imitations of the different variegated marbles are possible.

To imitate marbles having an alabaster-like base with more or less translucence, like many of the Red Ammonite, Parian, Carrara

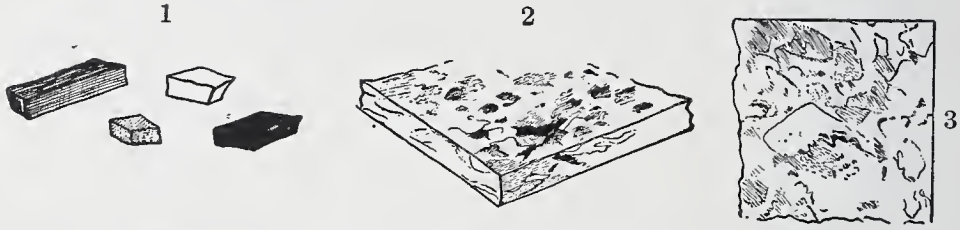

Fig. 224.—Manufacture of Pyroxylin Compounds in Imitation of Marble (Method of France).

and Phrygian marbles, it is desirable to use a proportion of pyroxylin pieces undyed, the translucency being varied by the addition of pigments as in the formation of factitious ivory.[1]

1. J. France U.S.P. 603526, 1898. Various limestones and marbles may be quite accurately duplicated in celluloid by selecting a pattern, either from nature or works of reference. ("History and Uses of Limestones and Marbles," S. M. Burnham —S. E. Cassino, Boston 1883—contains 48 chromolithographs), the configurations and veinings of which may be enlarged on co-ordinate paper by means of the pantograph. The shades are prepared by a combination of both pigment and dyestuff. The former is required to give the desired opacity and the latter the penetration into the lighter-colored celluloid substance, that a gradual blending from one tone to another may occur and the mass be devoid of sharp lines, indications of artificiality. If the plastic pieces are to be colored throughout, as required in the imitation of certain Griotte and English Serpentine limestones, the pigment is mixed with the pyroxylin before conversion and the dyestuff with the alcohol used to reduce the temperature of conversion. If grainings only are desired, the separate plastic blocks are either immersed in the dyestuff in solution, or a solution is sprayed over the surface, using a quickly penetrating celluloid solvent to dissolve the dye, acetone being satisfactory. The dimensions of the integral parts having been obtained from the co-ordinate plotted enlargements, they are cut, matched in color, fitted together, and pressure applied for a time varying with the apparent original infiltration of metallic salts into the limestone matrix. Permeation of color is effected by increasing either the temperature or pressure to the block Sheets about $\frac{1}{25}$ in. in diameter are then cut from the combined faces. While the preparation of the original block requires much time, skill and patience, a

In another method, which has the advantage that a large number of sheets of the same pattern may be obtained, the blocks are dyed as before, but in order to simulate those intricate markings caused in nature by the infiltration of minerals of a colored nature, the blocks may be hacked, cracked or otherwise crazed before dyeing, that the coloring matter may infiltrate into each tiny crevice. By cutting a block for a small distance and then breaking the same in two by manual force, a jagged and irregular line is formed. The dyestuff should also be dissolved in an energetic celluloid solvent, glacial acetic acid being preferable. The blocks after dyeing are set up in any pattern, and slowly pressed into a single mass by gradually increasing pressure and application of the maximum amount of heat. By applying the pressure gradually and extending over a longer period the dyestuff is disseminated farther into the celluloid masses, and form delicate, reticulated sprigs, leaves, tendrils and mosses, especially in the artificially produced cuts and cracks, resulting in that softness of tone and harmonious blending present in the finer marbles. If the face of the finished block has a series of markings represented by the square *A* in Fig. 225, then three other sheets cut from the same block, represented by *B*, when joined together as indicated, form a pattern of great symmetry and beauty and one in which the ramifications of color exactly coincide at the joined edges. Four such sheets may be attached by pressure to a thinner under transparent sheet, thus forming apparently a solid piece of a distinct pattern, and one that can be many times duplicated, depending only on the thickness of the original block.

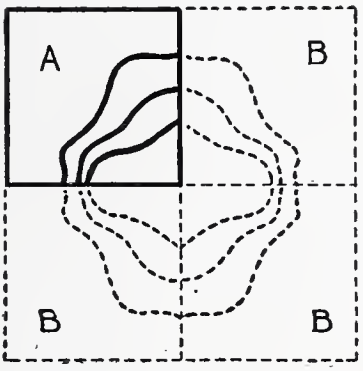

Fig. 225.—Showing Method of Matching Mottled Celluloid Sheets (*A*) in Imitation of Marble and Onyx.

Imitation Onyx. While true onyx is a crypto-crystalline variety of quartz, consisting of different layers of chalcedony quartz, onyx marble is composed chiefly of calcium carbonate colored by iron and

satisfactory block having been once prepared, say, 12 in. pieces, at least 250 sheets each $\frac{1}{25}$ inch diameter may be obtained from a single block, and this makes the cost of an individual sheet very moderate. The celebrated Elgin marbles from the Parthenon; Phigalian marbles from the Temple of Apollo Epicurus, and Numidian marbles and other antique limestones from the British Museum, have been imitated in this manner, and used in panel work and for other decorative purposes. Volterra gypseous alabaster and stalagmitic alabaster have been imitated in this manner, and are superior to the natural product in that the latter is perceptibly soluble in water and so soft as to be readily scratched with the finger nail.

manganese oxides. The beautiful banding is due to the deposition of successive layers of calcium carbonate.[1] Mexican onyx is the name given to banded varieties of aragonite found extensively in Tecali, Mexico, and Arizona.[2]

J. Stevens and E. Harrison were the first[3] to describe a practical process for the formation of a pyroxylin composition of artificial veined onyx, their method giving "the stratified cloud-like markings of pale tints with the strong yellow or brown color breaking through in a direction opposed to the trend of the lighter strata." A mixture of pyroxylin and suitable solvents in such proportions as to form a composition sufficiently soft for mastication in rolls is made, the mixture being separated into two or more parts before the color is added, and corresponding to the number of tints desired in the finished

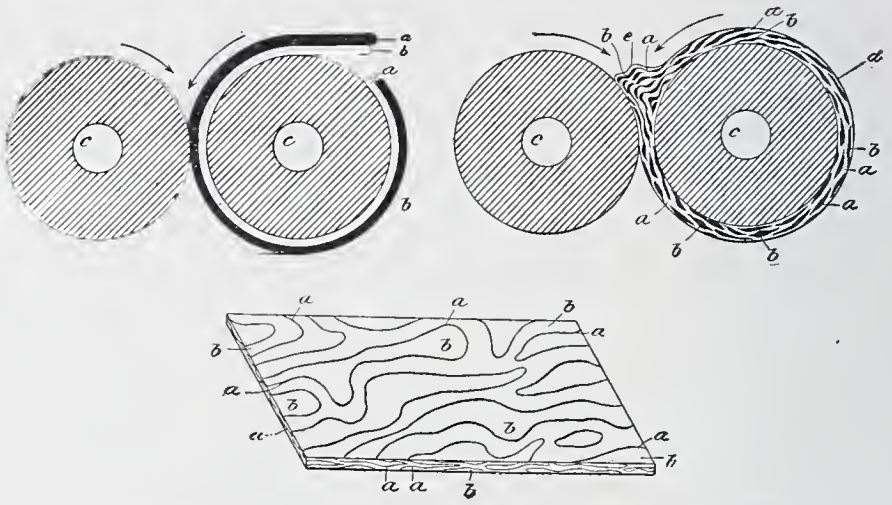

FIG. 226.—The Stevens and Harrison Process for Producing Imitation Onyx from Pyroxylin Plastics.

onyx. Each portion is then rolled separately and colored to correspond with the desired tint of the natural product to be duplicated. This produces crudely converted masses representing as many of the different tints as are to be placed in the completed product. Each tinted mass is next rolled into a sheet about $\frac{1}{2}$ in. thick and 20–30 in. superficial area. The sheets *a* and *b* (Fig. 226), are next placed together

1. U.S.P. 546360, 1895.

2. The successive strata in the typical onyx are black and white, but if one of the layers consists of the brown chalcedony known as "sard" or the red variety called "carnelian," the resulting stone is termed a "sardonyx," and this is imitated in plastic by a variation in dyestuffs only.

3. Rods or tubes may be formed by forcing the freshly rolled product in a moldable condition through the heated cylinder of a stuffing machine, gradually narrowed so as to constrict the material at the orifice, from which it issues from the nozzle in a condition suitable for forming rods or tubes.

face to face, and passed through the rolls *c* in such a manner that they adhere to one of the rolls as a single mass, and coming round meet the last end of the combined superimposed sheet, forming a continuous mass which is permitted to revolve. When the combination of colors is mixed so as to represent the lighter portion of the onyx, the mass is stripped from the roll and laid on a flat surface. An imitation of the raw yellow or brown streaks or veins of true onyx is produced by transversely cutting the flat stratified sheet, regulating the shape, obliquity of the cut, and closeness of the cut places to each other, by the particular sample of natural onyx to be imitated. Into these cuts an alcoholic solution of a dyestuff of dark yellow or brown color is introduced, the mass being then cut into suitable sizes and piled so as to form a number of superimposed sheets as shown in Fig. 227. These are then placed within a chase resting on the bed plate

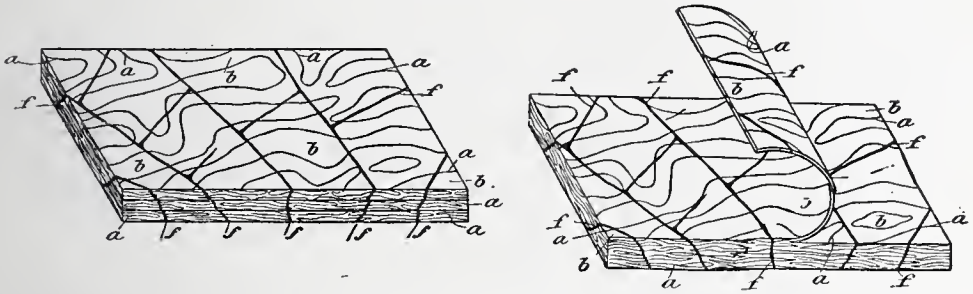

FIG. 227.—The Stevens and Harrison Process for Producing Imitation Onyx from Pyroxylin Plastics.

of a press, and by means of a plunger the plates, when heated, are forced into a solid cake. From this cake, when cool, sheets may be cut by means of a planing or veneering machine as has been described.

Imitation Mosaic.[1] In that form of natural mosaic consisting of irregular markings, a pyroxylin imitation may be made in the following manner: The compound is first formed into a number of masses which have small cross-sectional areas, preferably in the form of small sticks (*A*, Fig. 228). The slabs are either dyed by immersing in a dyestuff dissolved in a fluid which is a solvent of pyroxylin, or else the material is dyed throughout during the converting process.[2] The pieces, which are usually cut to resemble some natural pattern, are then welded together into a solid block by heat and pressure.

1. For "Celluloid Mosaic Imitations," see Z. Drechsler., 1906, **29**, 131.

2. E. Harrison and C. Thurber, U.S.P. 602159, 1898. In compressing masses containing geometrical designs, the pressure must be very gradually and evenly applied or the forms will be distorted. The individual members comprising the design must be equally seasoned, or upon pressing, the softer, less seasoned sections will more readily distort.

Sheets are then cut from the surface of this block, parallel or transverse to the original pieces, or at varying angles to produce pleasing effects.[1]

In tesserated or Florentine mosaic, where the tesseræ or individual pieces are small cubes of one color throughout, the celluloid is dyed by the addition of color to the alcohol used to assist conversion of the

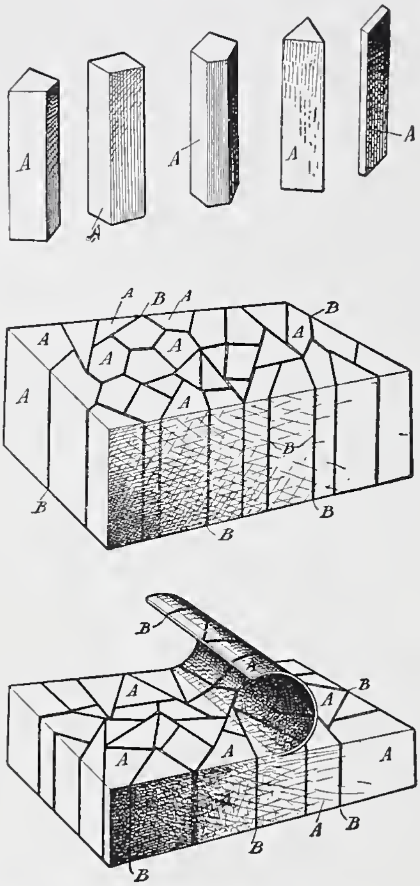

Fig. 228.—The Harrison and Thurber Method of Producing Pyroxylin Imitations of Mosaic.

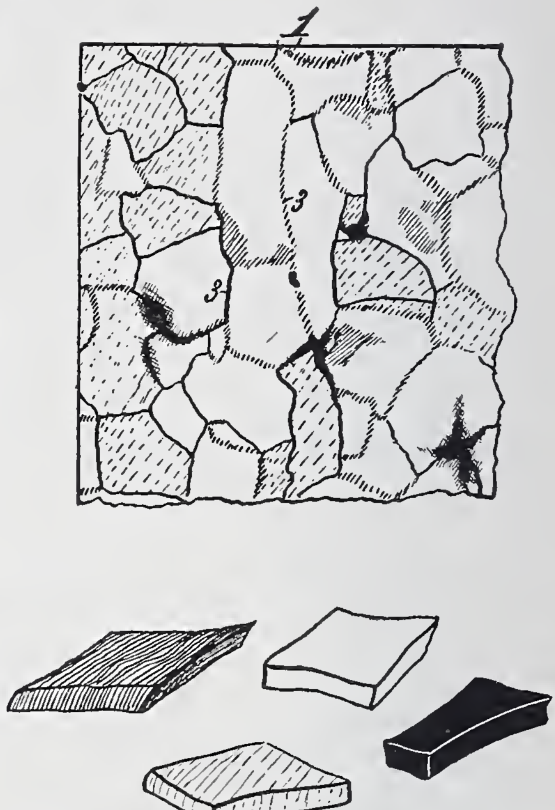

Fig. 229.—Pyroxylin Imitation of Mosaic, according to France.

plastic. To make the shade more uniform, after dyeing the plastic is rolled many times through pressure rolls, seasoned and cut into long rods (right parallelopipeds). These are fitted together according to some geometrical design, and welded into a solid mass by the usual heat and pressure. In Sectile mosaic imitation, larger irregular pieces, each of a distinct color, are accurately fitted together and welded. Graceful flowing patterns, geometrical designs, and picture-like subjects of great elaboration are possible, and unlike natural

1. Fig. 229. Process of J. France, U.S.P. 619037, 1899.

mosaics, once the pattern has been established, it may be duplicated several hundred times, by planing thin sheets off (about $\frac{1}{25}$ in. thick) and stiffening them by a backing of transparent plastic.[1] Sections of mosaics from the Battle of Isus, found in the "House of the Faun" have been successfully imitated in this manner, and are examples of great patience and artistic skill.

Imitation Cloisonné and Champlevé Enamel. Cloisonné is the name applied to that form of enamel work produced by building up on a metal surface, small partitions (*cloisons*), usually of copper and more rarely of gold, and these partitions divide up the field into a number of segments or compartments, in each of which is afterward placed colored enamel. Champlevé is formed by engraving out of a solid metallic matrix small cavaties which are afterward filled with the colored fluxes, the finished article being the same in both forms.

These enamels may be closely imitated with pyroxylin plastics by taking a given pattern, enlarging it pantographically or otherwise, and from the enlarged drawing, individual pieces of the desired shape and color are prepared as previously described. Sheets of transparent celluloid of about 0.04 in. in diameter are taken, and powdered metals and bronzes lightly sifted on their surface, the metal being impacted into the plastic sheet by heat and pressure, usually by rolling. Each colored piece of plastic (representing the colored enamel portion) is fitted entirely around with the thin metallic-incrusted sheet, all being then assembled in conformity with the pattern to be duplicated. The entire mass is finally softened by heat and pressure, both being very gradually applied, to form a single homogeneous weld. This block is then planed into thin sheets, the latter being formed around a wooden matrix to imitate a vase or other object of art, the intricate design appearing as a colored pattern separated by thin gilt lines (the metallic network in the real enamel), thus producing a striking and pleasing decorative effect.[2]

1. Or the back of the plastic may be roughened to increase adhesion and attached to a backing of wood or slate by means of shellac dissolved in alcohol containing 15% amyl acetate, with or without the addition of a small amount of camphor. By coloring celluloid, for instance with a blue pigment and dyestuff, as ultramarine blue and methylene blue, and pressing in small laminæ of mica or mother-of-pearl, a close resemblance to the valuable mineral known as lapis lazuli results. Using chrome green pigments and methyl green dye, and combining sheets containing this with sheets of celluloid colored black, imitations of malachite, azurite, chrysocolla and other copper-containing marbles may be formed. There is hardly a marble or mosaic pattern which cannot be duplicated with great fidelity in this manner, by manipulation of dyestuffs and pigments.

2. On account of the presence of the powdered metal, the knife edges are soon dulled when sheets are planed off.

Metallic Incrustations. On account of its extreme plasticity when warmed, celluloid is an excellent matrix in which to imbed pieces of metals, either in the formation of inlaid work, where the pieces have an exposure to the air from their superficial imbedding, or incrustations, where they are completely imbedded in the plastic mass. Gold, silver leaf, bronzes in thin sheets and colored metallic alloys and solid amalgams are cut into strips, stars, bands, leaves, spangles and other dainty and small forms. These particles, mixed promiscuously in the pyroxylin mass, made moldable by heat, after cooling produces a very peculiar but beautiful effect. The pyroxylin used may be either transparent, or lightly tinted, but must be entirely neutral. The presence of traces of acids dulls the colors of the brasses and bronzes, and tends to green their surface from the formation of the copper salts of the liberated acid. Neither must the plastic be notably alkaline, since this will also attack the copper-containing bronzes, dull their color, or if the alkali is present in larger amounts, turn the brass of a dirty, lusterless brown shade. The encrusted plastic may be bent, welded or otherwise formed in a manner entirely similar to ordinary celluloid.[1]

Inlaying Celluloid with Pigment Colors. Raised figures are painted upon a smooth pyroxylin sheet [2] in pigment, slightly softened with oil and turpentine or alcohol. When the pigment has become dry and indurated from the oxidation of the linseed oil, the sheet is heated just sufficiently to soften the surface, which is then passed through rolls, the pressure thrusting the hard pigment into the celluloid substance. The pattern may be further preserved by rolling a thin sheet of celluloid over the pigmented surface as a final operation.

In addition to the uses already described, jewelry (brooches, chains, pins, earrings, crosses, medallions, bracelets, and rings), inlaid buttons, knife handles, purses, pen and pencil boxes, album and book covers, chessmen, checkers, fans,[3] spoons and forks,[4] insulators,[5] storage cells,[6] packing rings, stop cocks, pistons, stuffing boxes,[7]

1. C. Paisseau-Feil (D.R.P. 222248, 1909) produces a silver paint from fish scales and collodion, in which the fish scales, before being mixed with the collodion or cellulose varnish, or lac, are dehydrated by heating with a liquid, miscible with these solutions, but not with water, whose boiling point is above 100°.

2. Nickerson, J.S.C.I., 1882, **1**, 147.

3. In the more expensive fans, celluloid has been used extensively, especially for the ribs.

4. Process of M. Lefferts, U.S.P. 235954, 1880.

5. See E. Street, U.S.P. 730514, 1903.

6. See H. Dey, "Horseless Age," 1906, **18**, 3, for method of making a storage cell out of celluloid sheets.

7. U.S.P. 184481, 1876, consists of a process for lining bearings with celluloid, on the principle that small particles of grit would become imbedded in the plastic and not injure the bearing, as in the modern Babbit-metal bearings. It is related

corks,[1] and as covering for ships' bottoms [2] are some of the manifold uses to which these plastics have been applied. Their uses are constantly multiplying, and so thorough have the various arts been covered in endeavors to introduce pyroxylin plastics, that to-day there is scarcely any manufactured material which has been not substituted either wholly or in part by celluloid or similar cellulose nitrate containing plastic.

The Manufacture of Collars and Cuffs. At the time of the discovery of the cellulose nitrates—from which time all the pyroxylin arts date back—the only commercial substitute for an all-linen and washable collar or cuff, was an article made either of embossed paper or paper as a backing, covered on the exposed surface with cheap muslin or cotton goods glued to the paper. Such collars and cuffs were—so far as the market of the world went—the only substitute for a linen collar and cuff which was at all satisfactory. Unsuccessful attempts had been made to make such articles from steel and rubber with paper facing.[3] Barnwell and Rollason [4] suggested that pyroxylin compounds might be used for coating paper for this purpose. The first attempts to apply pyroxylin as a coating material for collars and cuffs, and thus introduce the waterproofing effects of the cellulose nitrates, consisted in either painting a piece of textile material with the liquid pyroxylin or by the formation of a film on some smooth surface, usually glass, which, when dry or nearly so,

that an engine fitted with such bearings made a trip from New York to San Francisco to demonstrate the feasibility of the patent.

1. Method of Hagemann consists in uniting finely ground cork with an ether-alcohol pyroxylin solution and drying, the product being called "subrit." "Celluloid Starch" is the trade name for a brand of starch, and, of course, contains no cellulose nitrate.

2. Current literature contains the statement that celluloid sheets applied to ships' bottoms will effectually prevent the attachment of barnacles and sea-weed.

3. W. Hunt (U.S.P. 11376, 1854) made collars of fabric composed of both paper and cloth, by enameling and varnishing. (Reissues 1828, 1865; 1867, 1865; 1927, 1865; 2306, 2307, 1866; 5109, 1872.) W. Loekwood (U.S.P. 23771, 1859) embossed ladies' cuffs and collars in imitation of linen; J. Barton (U.S.P. 52659, 1866) made a collar by pasting muslin on a paper baeking. G. Ray (U.S.P. 48239, 1865) made a distinct advance by dissolving an ounce of guneotton in a half-pint each of alcohol and ether, pouring on a glass plate and allowing to dry. A solution of gelatin in water was then placed over the plate, paper next applied and the paper, gelatin and pyroxylin film stripped off the glass and cut into the collar and cuff forms. Other U. S. Patents are L. Deitz, 113272, 1871; 133969, 1872; N. Jones, 136735, 1873; J. Broekaway, 133736, 133737, 1871; D. D. Smith, 150722, 1874; F. Greening, 172995, 1876; F.P. 110571, 1875; A. Pitman, 174000, 174001, 174002, 172486, 173999, 1876; 190363, 1877; C. E. Ensign, 109725, 1870; L. Crane, 58223, 1866; I. Post, 126760, 1873; Wm Smith, reissue B-3014, June 20, 1868. The following English Patents are representative of the development of the art in that country: A. Newton, 13542, 1861; J. A. Cutting, 1638, 1854; L. Cornides, 745 1855; A. Job and E. Tomlinson, 1974, 1855; T. Henly and D. Spill, Jr., 2649, 1870; L. Bunn, 13713, 1851; A. Granger, 2140, 1861; P. Berard, 607, 1856; 1883, 1884, 1857; 639, 1858.

4. E.P. 945, 1859; 2249, 1860; A. Rollason, E.P. 2349, 2849, 1858.

was caused to adhere to a paper or cloth backing. In practicing the first of these methods, it was found impossible to get a sufficiently thick, even and smooth coating of material, and with the second method it was difficult to obtain a film or sheet of pyroxylin free from bubbles or airholes, which formed recesses for the lodgment of dirt, the film being of uncertain and varying thickness. While not apparent at first thought, the difficulties to be ovecome were enormous and may briefly be stated as follows: It was not alone necessary to imitate the appearance of a starched linen fabric, but its thickness, strength, weight, color, resiliency, stiffness and flexibility all must be more or less closely approximated in the article to be produced. Even the sense of touch had to be taken into consideration, for no one would have worn an article made of oilcloth or steel, which would have been cold and unpleasant to the touch. Further and beyond all these requirements it was absolutely essential that the article should be capable of being produced commercially in any desired quantity, with the regularity, certainty and precision which must be attained before any article can truly be said to be capable of successful commercial manufacture. And lastly, the article had to be waterproof, capable of being washed clean when soiled and produced at a sufficiently low price to enable it to compete in quality with a linen collar on the one hand and in cost with a paper collar on the other. The production of such a collar or cuff awaited the manufacture of celluloid in sheets, which was the first step toward solution of the problem. The sheets as manufactured were even, firm, capable of being made in any color, free from impurities and adapted to receive any impressions in the shape of imitation stitches. The imparting of proper strength to all the necessary points of these sheets was the requirement for a successful collar or cuff. It remained for R. H. and A. A. Sanborn and C. O. Kanouse to embody in tangible and practical form this idea, which had perhaps vaguely floated through the minds of others, patent protection being granted to them on Mar. 5, 1878.[1] All processes before this were tentative, visionary and more or less impracticable. These inventors produced a collar or cuff which might be worn a long time, easily renovated for continuous wear, and thus dispense with the services of the launderer, by producing them of celluloid or other forms of pyroxylin material. Between two thin sheets of celluloid was placed a thin sheet of muslin, linen or other textile fabric to give increased body, elasticity and strength to the whole. The celluloid sheets and inner material was submitted to suitable pressure with heat, thus thoroughly

1. U.S.P. 200939, 1878.

incorporating them into one body.[1] A serious defect was soon discovered in that the edges obtained from cutting out the three sheets (two of celluloid and one of inner textile backing) made a "raw" edge, which soon frayed. Sanborn[2] to overcome this made the interlining *A* and face *B* (Fig. 230), of the same size, but cemented together, and made so much larger than the size required, that the edges could be turned back over the interlining for a distance of a half inch or so, thus making in addition, a reinforcement at a point having considerable wear. The back or lining of celluloid was then cemented to the interlining and to the turned-over edges. In order to impart greater strength and durability, fine wire cloth was, for a

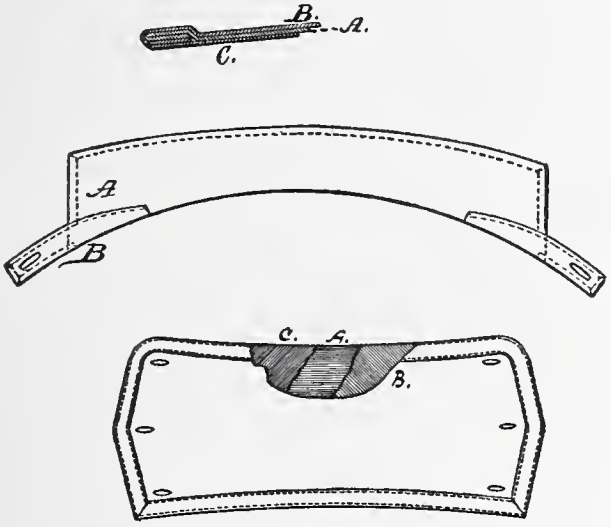

FIG. 230.—Sanborn's Method of Forming Celluloid Collars and Cuffs.

time, placed between the celluloid facings in place of the textile[3] (Fig. 230), but was afterward abandoned on account of the tendency of the wire to discolor the collar or cuff. The cuffs were first stamped out with a die,[4] while the collars were creased, bent and shaped by means of the Cary machine (Fig. 231).[5] Difficulty was experienced in making the tab (small flap of collar which is attached to shirt in front, Fig. 233) at such acute angles as desirable, on account of the great liability of cracking at the junction of the tab and the collar.

1. Were any pores to exist in the finished goods, at the first attempt to wash them they would fill with dirt which would be impossible to remove. The fabric would then present a specked and generally objectionable appearance. It was impossible to remove the bubbles and irregularities of the pyroxylin-film collars because pyroxylin without camphor or similar solid solvent does not impart plasticity, and it would be impossible to soften the film by heat after once becoming dry.
2. U.S.P. 221977, 1879.
3. C. Kanouse and A. Sanborn, U.S.P. 220386, 1879.
4. A. Sanborn, U.S.P. 233878, 1880.
5. E. Cary, U.S.P. 253001, 1882.

These difficulties were overcome by the use of detachable tabs [1] which were made up separately and cemented to the collar body. To stregthen the folds in pyroxylin collars, a fabric composed of fibers imbedded between and in two sheets of pyroxylin was used, being waterproof on both sides, yet sufficiently thin (being little if any thicker than the sheets of pyroxylin alone on account of the fibers always running in the same direction) to have the required flexibility combined with the necessary strength.[2] In order to increase the white appearance of the finished cuff, Hyatt [3] used a backing or filling of a blue tint instead of white, as had been customary up to that time. To form a hem, as in natural linen collars, and to increase the resistance at the

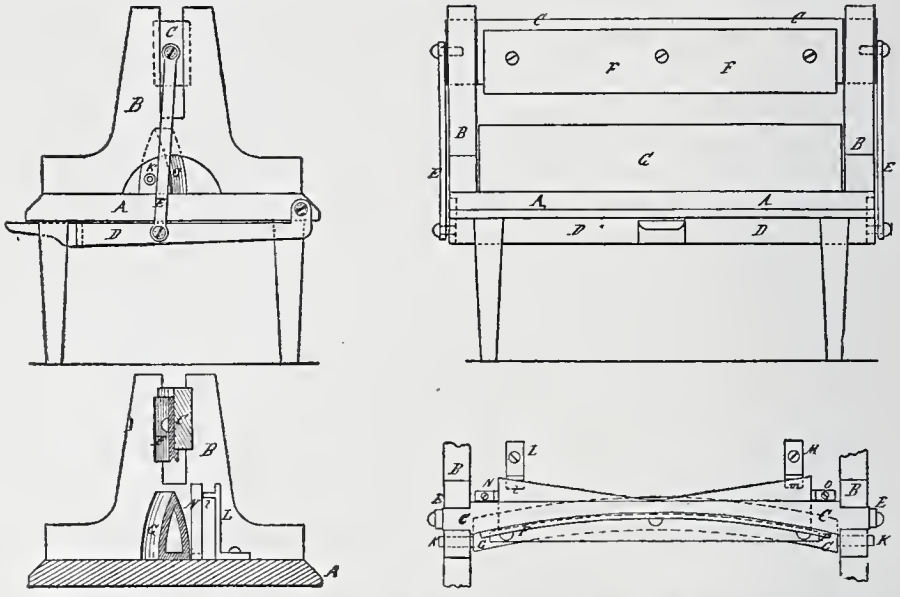

FIG. 231.—The Cary Machine for Creasing, Bending and Shaping Celluloid Collars.

edges, the edges of the face portion were turned over on the back of itself and cemented down, making a hem and a back of the same material.[4]

While the collars and cuffs made at this time were fairly satisfactory in body, many complaints were made as to lack of strength along the edges and especially around the buttonholes. The objec-

1. A. Sanborn, U.S.P. 258480, 1882. A saving in the cost of manufacture in this process is possible by using the small clippings for the tabs, which otherwise would be lost or sold at a reduced price as waste. This process differs from that of S. Haufman (U.S.P. 83893, 1869) only in that it relates to collars made wholly of celluloid.

2. J. McClelland, U.S.P. 271493, 1883.

3. I. S. Hyatt, U.S.P. 276948, 1883. Disclaims invention granted to P. Aub. (U.S.P. 147588, 1874).

4. A. Sanborn, U.S.P. 288955, 1883. Cf. J. Edson, U.S.P. 289240, 289241, 289242, 1883.

tion to many of the previous methods was that it stiffened the fabric too much if the stiffening agent was sufficiently strong to be effective, and rendered buttoning very difficult. To overcome this, E. Kipper[1] interposed a piece of membranous[2] material (Fig. 232), about the buttonholes, the exterior layers of plastic remaining as before.[3] While such a buttonhole is efficient, an objectionable feature is the noise or

FIG. 232.—The Kipper Celluloid Collar or Cuff.

rattle occasioned at the buttonhole by the contact of the sleeve or collar button with the hard pyroxylin material. J. Jarvis[4] was able to overcome this by providing the collar or cuff with an opening larger than the buttonhole desired, and uniting to the article about the opening, a piece of textile material containing the buttonhole proper, the latter being located within the opening and separated from the edges by a flexible body of textile material. This places in the opening of the stiff collar or cuff the buttonhole in such a manner that the fabric only is manipulated by the fingers in buttoning and unbuttoning, thus decreasing the noise or snap and also the liability of splitting, cracking, breaking or rupturing the collar or cuff substance (Fig. 233). J. France[5] obtained best results using tanned calf

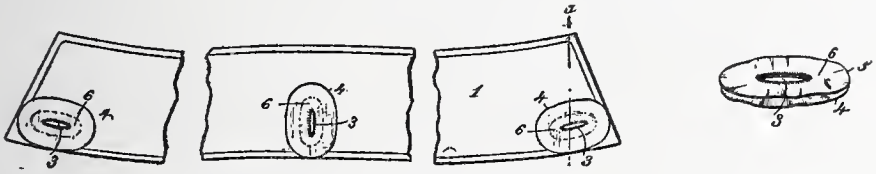

FIG. 233.—The Jarvis Celluloid Collar or Cuff.

or sheepskin for the flexible material for buttonholes, or[6] chamois leather or undressed kid, claiming the latter is less liable to discoloration by perspiration. In 1890 there was issued to J. Hyatt, the discoverer of celluloid, a series of United States Patents which embraced important improvements in plastic cuff and collar manufacture. Hyatt found that if two or more sheets of woven vegetable fabrics be united by a solvent of cellulose, the resulting fabric will have the

1. U.S.P. 322729, 1885.
2. Such as skin, bladder, eel-skin, various kinds of fish skin, "goldbeater's skin" and similar substances
3. E. Kipper, U.S.P. 330838, 1885.
4. U.S.P. 343903, 1886.
5. U.S.P. 418787, 1890.
6. See applications U. S. Serial No. 295304, filed Jan. 3, 1889.

requisite stiffness of starched goods, the united surfaces being converted into vegetable parchment without injuring seriously the natural appearance of a fine woven fabric upon the exterior surface. If, however, the entire substance of the two sheets be parchmentized, the exterior would be readily penetrable by water in cleansing, and would become wrinkled when dry. Therefore he parchmentized only partially, and upon the adjacent sides where the pieces of fabric are joined together, the outer side of each layer retaining its original porous character. By then applying a suitable pyroxylin varnish to both exterior sides, the waterproofing effect is obtained.[1] In this manner, it was claimed, the collar took on a starched appearance and feel.

By using zinc chloride and sulphuric acid [2] as the cellulose solvent, and dammar, copal, or gutta percha with pyroxylin for the outer varnish, the cost of manufacture was considerably lowered. In order to obviate the noise caused by the rattling of the cuff button shank in the large cuff holes [3] the buttonholes are set at a greater distance apart upon one end of the cuff than upon the other. When the ends of the cuff are overlapped, therefore, the buttonholes do not entirely coincide, and the introduction of the button or stud through such holes tends to crowd certain of the buttonholes laterally, and the cuff in reacting exerts a lateral pressure upon the button or stud shank. The latter is thus gripped in the buttonhole, and the cuff effectually prevented from rattling upon the stud.[4] (Fig. 234.) To still further reduce the cost, the use of basswood veneer about 0.001 in. thick for the interlining was tried,[5] but soon abandoned. In still another method [6] the edges and especially buttonholes are reinforced by a combination of caoutchouc and pyroxylin ground together in calender rolls, and then subsequently treated, as by vulcanization,[7] the material being known as para-pyroxylin, and when dissolved, as "Arlington plastic." Until about 1885 nearly all the imitation and other linen collars were the high or straight variety as distinguished from the winged or turndown kind. When these came into favor, difficulty in preventing cracking in the fold of the wings was found.

1. U.S.P. 419257, 1890. M. Friedländer and P. Tuebben (E.P. 23547, 1909) provides linen and the like with a washable coating in which celluloid and a small quantity of white wax are dissolved in a suitable solvent, such as acetone, and the solution is applied to the material by any convenient method. The solvent is then allowed to evaporate, leaving a washable coating which does not crack.
2. J. Hyatt, U.S.P. 419258, 1890.
3. J. Hyatt, U.S.P. 419260, 1890.
4. J. Hyatt, U.S.P. 419263, 1890.
5. J. Hyatt, U.S.P. 419259, 419262, 423303, 1890.
6. J. France, U.S.P. 421860, 1891.
7. See application filed Mar. 27, 1889, Serial No. 304958.

It is customary among those wearing this style of collar to attach it to the button at the back of the neck and then raise the fold to permit the insertion of the band of the neck tie, the collar being then turned down and buttoned in front, after which the necktie is adjusted. In the usual method of manufacture where this style of collar has either been formed from a single sheet or piece, or composed of two sheets cemented together and cut to the right size, and then folded to the required shape by the application of heat along the line of fold, it is impossible to many times raise them from the band in order to insert the necktie without cracking the collar along the line of fold. France overcame this [1] by preparing the collar of two sheets of pyroxylin

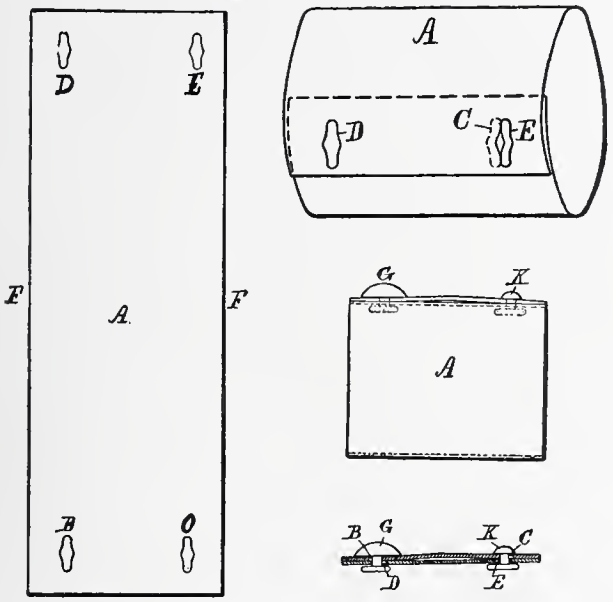

FIG. 234.—The Hyatt Non-Rattling Celluloid Cuff.

material (Fig. 236), the two separate sections being secured together at the folding, by a much thinner layer, high in pyroxylin, and which had the additional tensile strength and elasticity due to the thinness of the plastic. Kipper and Jarvis have called attention to the fact [2] that inasmuch as the plastic sheets attached as exteriors to these collars and cuffs seldom exceed 0.02 in. in thickness, any irregularities in the cutting surface, or imperfection of the knife used in the sheeting—as for instance caused by adhesion to the knife of a speck of dirt or scrap of metal—may appreciably alter the thickness of the sheet at a specified point, and hence introduce a line of weakness. In order to obviate this possibility, they use a series of sheets (Fig.

1. U.S.P. 425129, 1890. 2. U.S.P. 425679, 1890.

235), cementing one upon the other, and preferably at different angles, thus breaking up the parallelism of the strata and incorporating the laminæ just as when a single sheet is used. As an improvement on the old rubber enameled collar of Pease,[1] and in order to combine

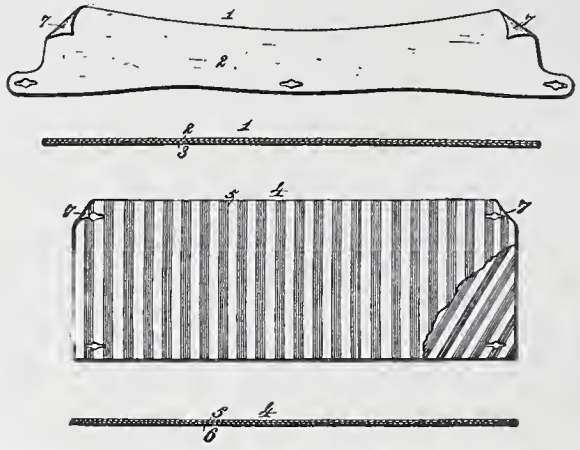

Fig. 235.—The Kipper & Jarvis Celluloid Collar or Cuff.

the greater elasticity of rubber with the tensile strength of pyroxylin, the latter in thin sheets (0.004–0.008 in. in thickness) are attached to a thin rubber sheet, and this used for the exterior and interior collar and cuff material.[2]

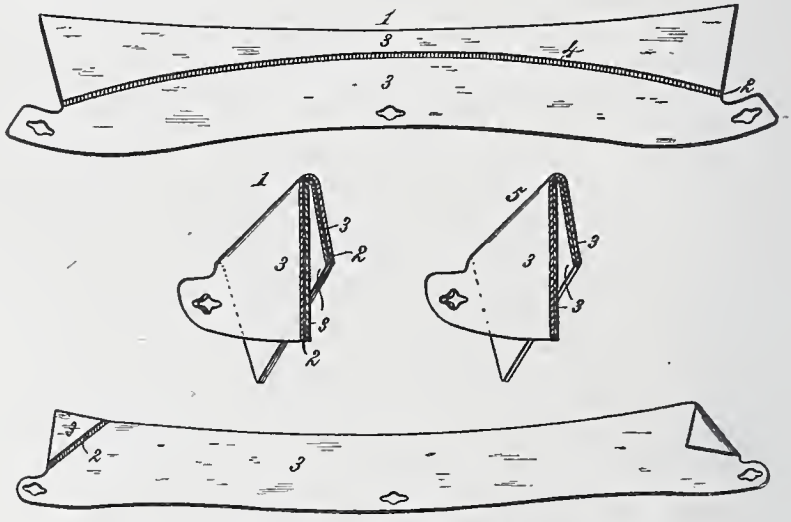

Fig. 236.—Waterproof Collar, according to France.

A process for manufacturing shirt bosoms of pyroxylin plastic as perfected by Hyatt[3] consists in treating long strips of fabric, preferably of muslin, with a cellulose solvent by passing the muslin between

1. U.S.P. 38122, 1863.
2. See U.S.P. 418787, 421860, 424129, 1890.
3. J. Hyatt, U.S.P. 436787, 1890.

two rolls, "powdered cellulose" being sprinkled on the surface to increase the starched effect. Webs of paper, one on each side of the muslin interlining, are then attached, both sides of the paper being rendered waterproof with a pyroxylin solution. The shirt front forms are then cut out and reinforced in the usual manner. All paper collars are more or less permeable by moisture, even when a pyroxylin varnish has been applied to their exterior. In the earlier paper collars, however, the exterior layers of paper were cemented to the inner muslin backing by gelatin, mucilage, or paste, so that when moisture did penetrate the paper substance, the entire collar was disintegrated on account of the moisture dissolving the paste which joined the several collar layers. J. Hyatt[1] overcame this defect by cementing the paper layers and muslin with an adhesive insoluble in water[2] so that if the water did somewhat soften and penetrate the outer water-repellant layer, the inner portion would still hold together intact. In that manner he was able to produce paper collars and cuffs which would stand several washings before it was necessary to discard them. To produce a reversible collar or cuff,[3] a cape (Fig. 237) may be attached, which can be made to project from either longitudinal edge of the collar, thus permitting it to be reversed when occasion demands. The cape, of any textile fabric, is cemented at or adjacent to the center of the collar by means of an auxiliary strip of pyroxylin plastic, placed along, and projecting beyond the edges of the attaching fabric.[4] If it is desired to imprint the imitation article with a desired pattern—in imitation both as to design and color of the linen or percale shirts, collars, and cuffs now so extensively worn, the following[5] method may be used. To a base sheet

1. U.S.P. 419261, 1890.
2. See U.S.P. Serial 270546, 290764, 1888.
3. E. Kipper, U.S.P. 388287, 1888.
5. See U.S. Serial 161335, 1885.
4. J. France, U.S.P. 392794, 1888. The British Xylonite Co. (E.P. 7738, 1887; abst. J.S.C.I., 1887, 6, 559) have devised a process for manufacturing striped or lined xylonite or celluloid, for collars and cuffs, by superposing in suitable order a number of sheets of pyroxylin plastic of varying colors required in the fabric, compacting the sheets into a solid block by combined heat and pressure, and then cutting the block into sheets at right angles to the strata. In the C. Brady process (U.S.P. 409345, 1889) a flat sheet of pyroxylin of any desired thickness is taken and subjected to the action of cold rolls (preferably of copper) which are engraved in the desired design, taking care that the engraving of the pattern shall be shallow, and the pattern a light and open one, so as not to carry too much ink. After the sheets are impressed with a printing ink of the desired color, they are subjected to the action of steam by placing a number of them, one at a time, in a steam box so arranged that each sheet is exposed on all sides. The amount of steam should preferably be from 3–7 lb. per square inch, the sheets being subjected to this action from five to twenty-five minutes. The exact degree of steam per square inch and the amount of time the sheets are to be exposed are varied according to the amount of seasoning the plastic has previously undergone. After being subjected to the steam pressure, each sheet has become warped and wrinkled. They are finally sub-

of celluloid having a thickness of about 0.021 in., is cemented another sheet of about 0.005 in. in diameter, and of any desired color. Upon the face of a steel die is cut in relief the pattern to be formed, such as wide or narrow stripes, rings, polka dots, anchors, etc., the height of such relief being 0.006 in., or a very little greater than the thickness of the upper sheet of celluloid. This die is placed upon the upper or colored celluloid sheet, face downward. Upon the back of this a

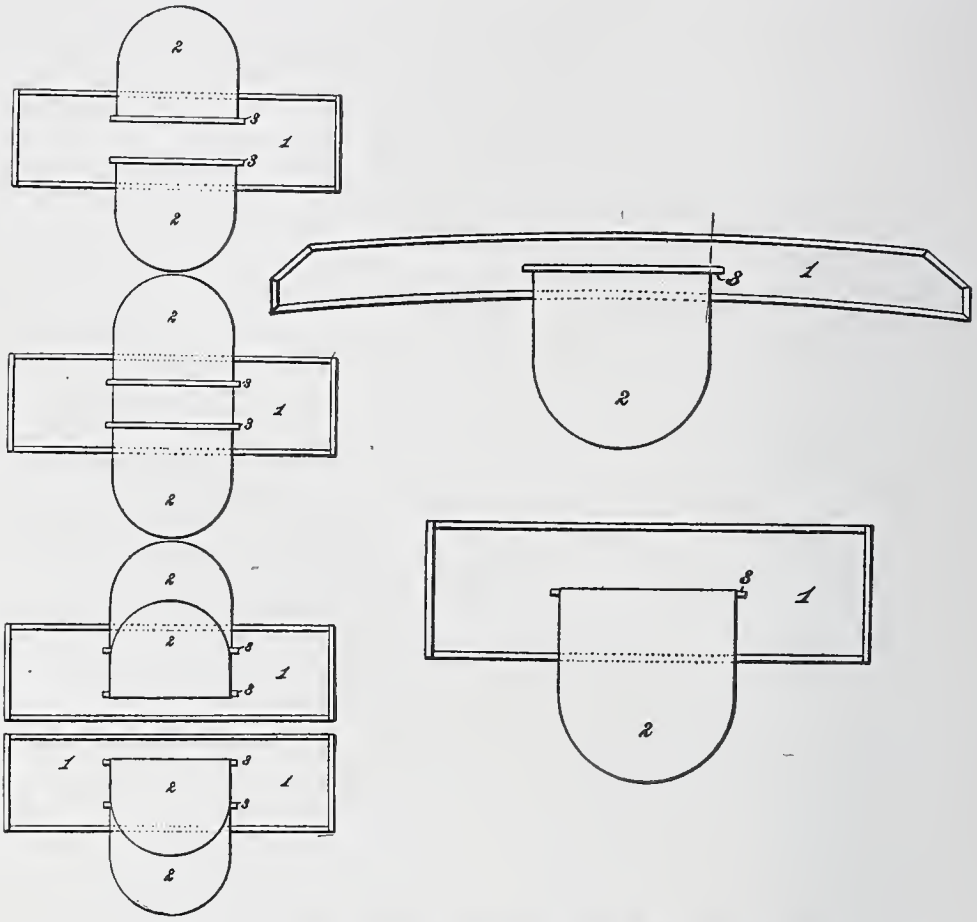

FIG. 237.—The Kipper Reversible Celluloid Collar or Cuff.

second sheet of zinc is laid, and two other cemented celluloid surfaces imposed upon it, and this building up of layers in this manner continued until a number of series have been prepared. Heat to about 75–85° is then applied together with pressure, the sheets after cooling being removed from the press. It will be found that the dyes have formed an intaglio pattern exactly the reverse of that on their

jected to a smoothing process by being passed through heated rolls which further imbeds the pattern into the yielding mass, when, after drying, they are indelible and especially applicable for the manufacture of plastic cuffs and shirt bosoms.

faces, the intaglio being in the thinner colored celluloid sheet. The colored sheet is then scraped or removed to a depth of 0.005 in., leaving the surface of the thicker sheet nearly even with the pattern appearing on it. The latter sheet is then placed between muslin or linen and pressure applied, when the surface takes on the exact imitation of the texture of the fabric.

One of the greatest difficulties encountered in producing collars and cuffs in large quantities was the tendency of the webs of pyroxylin when delivered by the manufacturer to warp or buckle by reason of unequal contraction. It is almost impossible to prevent this, strictly speaking, a celluloid without volatile solvents being unknown. Unless remedied, this contraction continues for a long time.[1] Of the many devices patented to overcome this, that of G. Goldsmith and A. Merrill [2] has been largely used. It is a machine designed for

1. U.S.P., 505399, 1893.

2. It is invariably found that when placed upon a plane surface the web or sheet will touch that surface at only a few points. This is not the case immediately upon the completion of the manufacture of the sheet pyroxylin, but within a short time after, and continues so at all times thereafter. Another defect of sheet pyroxylin as delivered by the manufaeturer is due to the peculiarities of the manner of making it. Sheets or webs of pyroxylin eompound are cut from blocks or eylinders while they are in a green or semi-plastic state, in about the same manner in which vencer is cut from wooden bloeks or cylinders, i.e., by taking shavings from such blocks or cylinders by means of sharp eutting blades. It then oeeurs that by reason of the unequal density of the material, the cutting edge does not take hold of the material with the same ease throughout its whole width, and at the places where greater resistanee is met with by the cutting edge, the sheet becomes wrinkled. These wrinkles remain in the sheet after the material has become solidified and become more pronounced in the eourse of solidifieation. In consequence, when sheet pyroxylin is received by the manufaeturer of shirt collars the material, or as it is technically called, the "stock," is invariably warped, buckled and wrinkled. This condition causes considerable trouble in the eutting out of eollars, and this is one reason why it has heretofore been found impraeticable to eut collars of that material from webs upon the so-called "interlocking prineiple," which is commonly practieed in the manufacture of paper collars, and whieh has been found to offer great advantages both as respects the ease of manipulation and the saving of material. The cutting of collars upon the interlocking prineiple requires that a strip or web, having a width equal to the widest part of the collars plus the narrowest part of the same, with parallel straight edges, be fed intermittently under suitably shaped cutters, whieh split the strip upon oblique lines, marking off both the narrowest and the widest parts of two collars, the narrow part of one eollar corresponding to the wide part of the other. In this split condition the strip or web has to be farther fed through the machine and the next cut made must join the first cut without perceptible break or kink in the line of the cut. This is easily effeeted in the case of paper eollars, sinee a paper web has praetically no warp or buekle, and whatever trace of warp there may be in the paper. is laid down suffieiently well by the feed rollers between whieh the paper passes to the cutters. When this practice is attempted upon pyroxylin stock, it is found that by reason of the warped condition of the strip or web, the feed rollers often advance one edge faster than the other so that the strip is not presented to the cutters in the proper position to start with, and that at the next succeeding feed for the eontinuation of the first eut, the stoek is presented to the eutters in a slightly differen.t manner from that in which the first part had been presented, so that the second eut does not imperceptibly merge into the first, but either leaves a gap or a kink in the line of the cut, whereby the collars are spoiled. For these reasons it has heretofore been found

cutting pyroxylin collars from a web upon the interlocking principle, being a combination of suitably shaped cutters and web feeding devices, with a heated table which supports the web under tension on its way to the cutters. A feeding device for dragging the web over the surface, heating still with tension, straightens the plastic out so that accurate forms may be rapidly cut. An ingenious apparatus[1] has been devised for thickening and protecting the edges of collars and cuffs, by applying pasty pyroxylin composition in a layer of uniform width and thickness along the edge in imitation of a hem. The apparatus comprises a tool provided with a gauge channel supplied with the composition, the edge of the article being drawn through the channel. The amount of pyroxylin deposited can be varied to suit.

In all collars and cuffs a small amount of castor oil, about 15–20% of the weight of pyroxylin, is added to give a slight feeling of pliability. The white color is imparted by means of a zinc or magnesium salt, usually the carbonate, lead carbonate or other lead salt being unsuitable on account of darkening from the sulphur compounds in the perspiration. Where the plastic contains a large amount of pigment, the waterproofing effect is materially decreased so that a certain porosity results, which is apparent on attempting to clean such a collar, when it will be found that particles of dirt have become so imbedded in the plastic mass as to be removable with difficulty, if at all.

In the finer grade of collars, each individual strand of the linen can apparently be seen, and this deception is made possible by the following process. A linen collar which has never been ironed, and in which the fibers are most conspicuous, is spread out on a zinc plate, and from it is made a plaster cast or electrotype. This produces with great fidelity both the stitching of the seams, the weft and weave of the linen and the texture of the fabric. A similar cast is taken of the under side of the collar, and from these casts, type metal molds are made in the usual manner. The sheet celluloid cut to the proper size and shape is laid on one of these molds, heat and pressure applied, which forces the softened plastic into the most minute configurations of the plate. When the mold has cooled, the flat collar is taken out and shaped as previously described. The high gloss is imparted by passing through heated rollers in a similar manner to the collar iron-

impracticable to cut pyroxylin collars upon the interlocking principle from strips or webs, and the practice has been to cut them from wide sheets, which were piled upon each other, then forcibly compressed, and then stamped out with suitable cutting dies, which produced a dozen or more collars at one cut, but which did not admit of the practice of the interlocking principle, and therefore caused a considerable waste of material.

1. J. Hyatt, U.S.P. 455333, 1891.

ing machines used in laundries. The degree of gloss is governed in a great measure by the smoothness of the rollers, being more resplendent as the latter are more highly polished.

The Manufacture of Pyroxylin Plastic Combs on a satisfactory basis, may be said to have commenced in 1878, in which year protection was given J. Hyatt [1] for a process of preparing celluloid combs, in which nearly all the previous defects found in wood, horn, rubber and metal combs were satisfactorily overcome. Previous to this time, combs had been made of pyroxylin, but had been either too brittle, non-elastic or excessively pliant. Thus a comb made of wood, besides being liable to warp, does not possess the requisite strength for its purpose, and becomes unsanitary when allowed to remain coated with oil or dampened by water; horn is liable to sliver or fray on the edges of its teeth; metal will oxidize and rust in contact with water, while hard rubber is often brittle, strongly electric, and does not retain its flexibility at a low temperature. On the other hand celluloid has been found to possess many valuable properties which admirably adapt it to construction of such devices as combs. Thus celluloid is easily molded and stamped when warm, and after cooling retains the contour which it received when warm. It is not affected by cold, but retains its flexibility and elasticity at any climatic temperature. Is much stronger and less frangible than wood, hard rubber or horn, lighter than metal, unaffected by oil or water, and capable of taking a very high polish. The pyroxylin surface is not harsh to the skin, and the teeth are seldom fractured by bending or by falling from a great height. None of the materials above mentioned produces a comb of so many excellent qualities and inherent superiorities as a comb made of celluloid.

In Hyatt's process, a strip of celluloid is first formed which, in transverse section, approximates to that of the comb. The strip is cut into pieces of the desired length, each coated with a suitable solution or lubricant which will enable it to be separated from any porous material, when it is placed in the cavity of a metal die shaped to form the comb blank. The latter is lined with porous and absorbent material, the purpose of which is to absorb or allow the escape of the vapor liberated in the plastic by the contained solvents. The die and contents are then placed in a cylinder, which is then closed and filled with hot oil or glycerol, or the cylinder heated by means of a steam jacket. Pressure is brought to bear on the die, thus causing the plastic material within it to assume the form of the comb blank. While still under pressure, cold water is admitted to the cylinder

1. U.S.P. 199909, 1878.

to harden the plastic, when the blank is ready to be formed into a comb.[1] In a subsequent process[2] the entire comb is completed in a

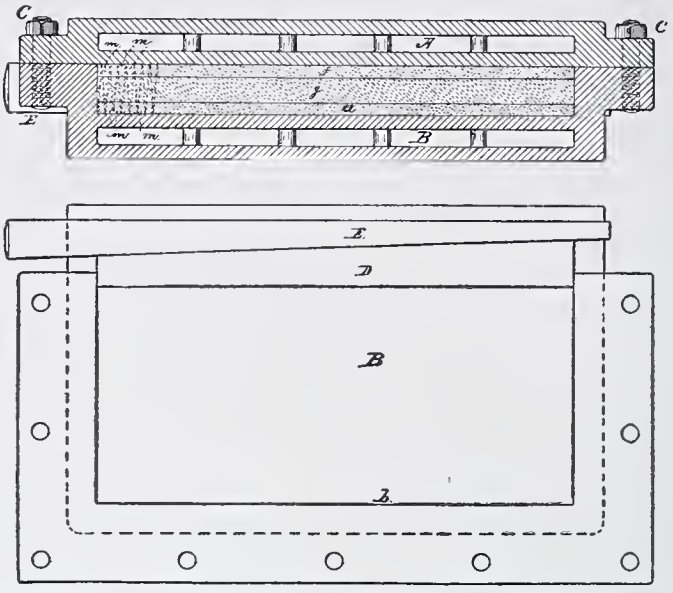

Fig. 238.—Celluloid Comb Manufacture, according to Hyatt.

single operation by placing a rod of the plastic material in the groove *a* (Figs. 238, 239, 240, 241), when small pieces representing teeth (4) are

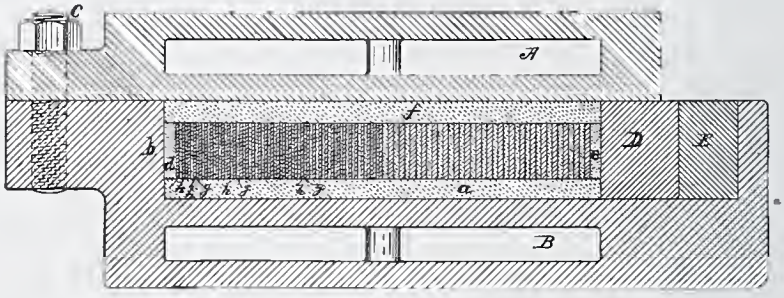

Fig. 239.—Celluloid Comb Manufacture, according to Hyatt.

inserted into each of the matrices, the ends of the pieces of teeth being brought in contact with the rod previously inserted. By now closing the

1. U.S.P. 299389, 1884. With horn, much time is necessary to scrape it and prepare it for the teeth. These are cut in by sawing the hollow horn through to the center, the sawed pieces then being cut off to the right length, the comb boiled in water, warmed over a flame and then placed on a warm block and flattened out. Then follows broadening, pressing, scraping, polishing and other operations, all of which are unnecessary with celluloid.

2. J. Hyatt, U.S.P. 299390, 1884. In a later process (F.P. 319542, 1902) the nitrocellulose is made plastic by amyl acetate and camphor, the mixture being then incorporated mechanically with an isomer of cellulose, such as starch, flour, dextrin or gum, previously gelatinized by heating with water.

die and applying heat and pressure, the small pieces weld to the rod to form a complete comb. Upon the removal of the comb from the die, it may be polished on a buffing wheel or otherwise finished to complete it for the market. Another method of polishing is to buff on a ragging wheel with woolen cloths containing tripoli, or by rubbing

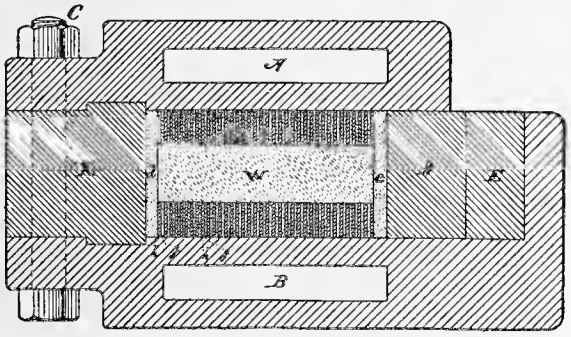

FIG. 240.—Celluloid Comb Manufacture, according to Hyatt.

on a woolen-covered wooden wheel, the celluloid being kept hard and cool by constant dripping of water on the surface being polished.

In the process of making combs devised by J. Hackenberg [1] designed especially for the ornamentation of artificial tortoise shell,

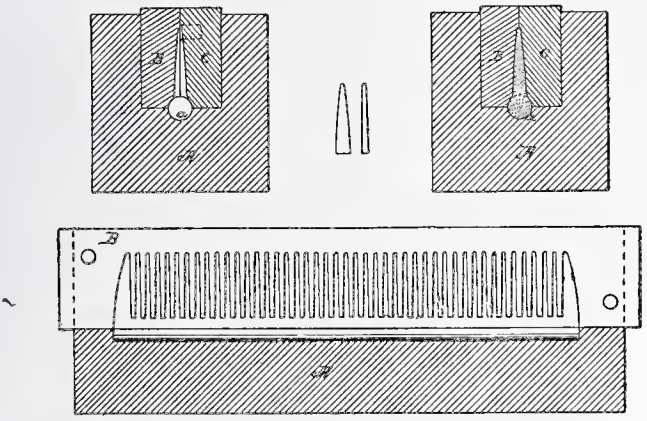

FIG. 241.—Hyatt's Process for Manufacturing Celluloid Combs.

blocks or plates of different-colored celluloid strips (Fig. 242) are arranged according to the designs desired to be produced, by cutting small pieces transversely from the blocks or plates. These are cemented

1. U.S.P. 699516, 1902. In the process for manufacturing combs as patented (F.P. 407846, 1909) by Soc. Industrielle de Celluloid, the celluloid is mixed with maltodextrin, obtained from the fermentation of dextrin by the aid of malt. Before being added to the celluloid, the maltodextrin is preferably neutralized by the addition of a suitable amount of a weak alkali, such as borax, and the water separated by evaporation.

together into strips or bands as shown, which are then cemented to the article to be ornamented, the latter being finally molded into proper shape by heat. It is evident that by the exercise of sufficient ingenuity the number and intricacy of designs may be multiplied indefinitely, and therefore the process is capable of wide application. In the drawings, 1, is a front elevation of a celluloid comb ornamented according to this invention; 2, a plate formed of a number of differently colored strips of celluloid cemented together; 3, a strip cut transversely from said plate at right angles thereto; 4 represents similar strips cut at an oblique angle from said plate; 5 and 6, narrow separating pieces of celluloid that are interposed between said strips and cemented

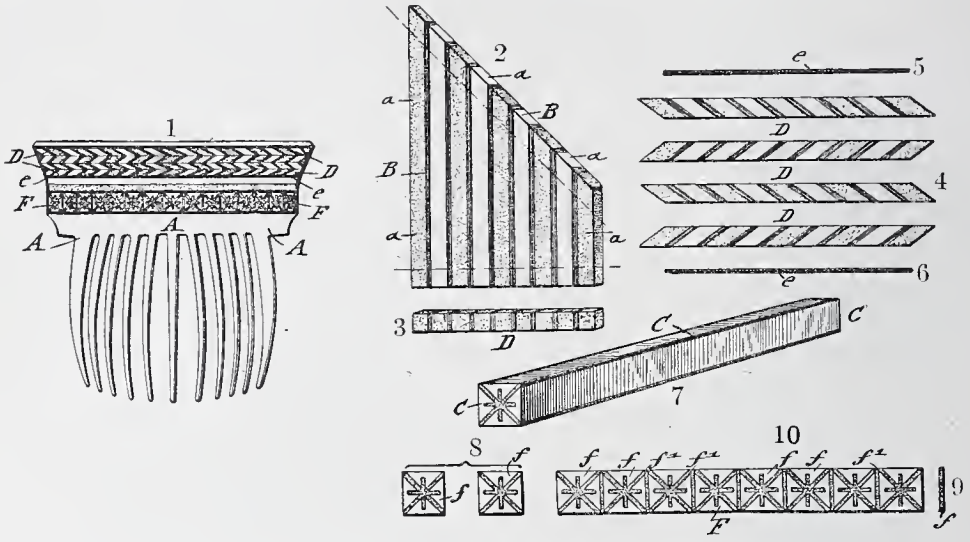

Fig. 242.—Manufacture of Celluloid Articles (Hackenberg's Patent).

to them; 7, a perspective view of a rectangular block of celluloid formed of differently colored longitudinal pieces; 8, small pieces of celluloid cut transversely from said block; 9, an end view of one of the separating strips of celluloid which are interposed between the so-ornamented pieces cut from the block and cemented to it, and 10, an ornamental band or strip formed of the square pieces and separating strips cemented together for use in ornamenting the celluloid articles.

The strips *a* of differently colored celluloid of varying widths are cut from the plates of celluloid of uniform thickness and then cemented together at their sides by means of a celluloid cement at ordinary temperature, so as to form either plates *B* or blocks *C*, as shown in 2 and 7. From the plate *B* narrow strips *D* are cut at right angles to the body or obliquely on the dotted lines in 2, so that

ornamental strips or bands D are obtained, as shown in 3 and 4. These are connected with each other by cementing together either directly or by interposing the narrow separating strips c, as shown in 5 and 6, between them or by arranging them in zigzag or other relative position toward each other, as shown in 1. When the blocks C are cut into thin plates or pieces transversely to their longitudinal axes, the individual pieces or plates f have the same geometrical ornamentation that is formed by the arrangement of the strips forming the block, the plates or pieces being cemented together directly or with intermediate separating pieces f', so as to form the continuous band or strips F. (Shown in 10.) By suitably grouping and cementing together strips or bands cut from the plate B and block C any desired geometrical design of a mosaic appearance is obtained. These different strips or bands are then cemented together and to the blank of the body to be ornamented—in the case of a comb at the headpiece and of a napkin ring at the edge. The thus-ornamented celluloid blank for combs or napkin rings is then heated and molded into the shape required for use.

In mounting jewels such as rhinestones in celluloid, recesses are formed in the plastic and the stones secured in these pockets by a pyroxylin lacquer as cement, or metal pockets or strips of pockets are secured to celluloid and the stones mounted in these pockets. Ornamental strips of metal are also imbedded in celluloid and riveted in place. In the process of M. Brown [1] a new method of mounting stones in plastics is described which is illustrated in Fig. 243. A comb A of celluloid is shown with mounted rhinestones therein, in which a slight recess C is first formed for each stone, the recesses being slightly smaller than the dimensions of the stone to be mounted. After the recess has been formed, the celluloid in and around it is softened by heat and the stones imbedded in the yielding plastic, which, as it cools, contracts and holds the stones. It is evident that the essence of this invention may be applied to mounting many other kinds of materials in a yielding plastic surface which contracts slightly upon cooling.

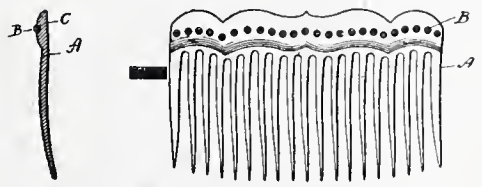

FIG. 243.—Mounting Stones in Celluloid.

Manufacture of Brushes. The first operation in the formation of celluloid brushes is the securing of the bristles to the brush stock, and this is done by inserting the bristles into a perforated block or

1. U.S.P. 714447, 1902.

templet (*A* in Fig. 244), the perforations being arranged in the same manner as the tufts are to stand in the stock of the completed brush. The holder is then applied to the brush stock *B*, the holes of which

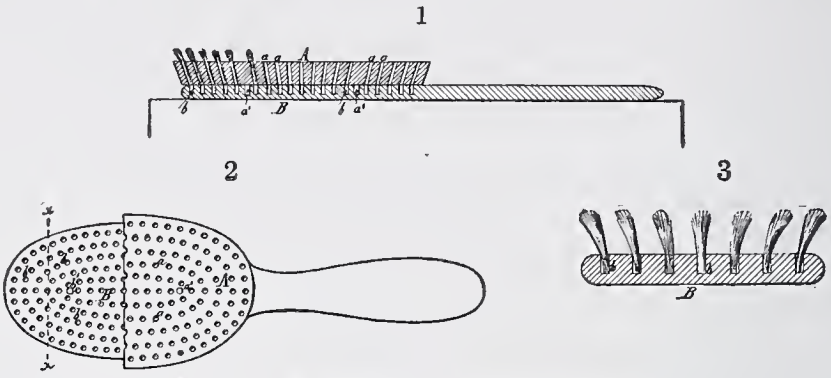

Fig. 244.—Manufacture of Celluloid Brushes.

are filled with a celluloid cement. The bristles are forced to the base of the sockets, and the holder allowed to remain in place until the cement has hardened from evaporation of the solvents, when the latter is withdrawn, leaving the bristles properly secured in place.[1]

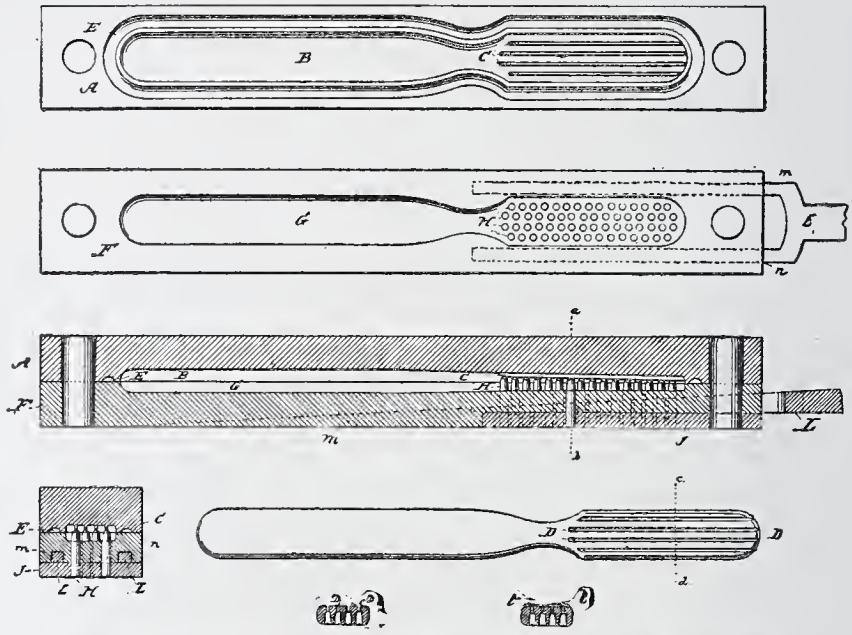

Fig. 245.—The Miller Method of Celluloid Tooth Brush Manufacture.

In the manufacture of tooth and nail brushes,[2] a die or mold is generally used in which the plastic material is subjected to the heat

1. I. & J. Hyatt, U.S.P. 156355, 1874; for method of producing the usual unequal length of bristles in each tuft, see original patent.
2. H. Miller, U.S.P. 345983, 1886.

and pressure necessary in order to give the product the desired form. The method is best understood by reference to Fig. 245, in which 1 is the inner face of the upper section of the mold, and 2, the inner face of the bottom section, 3 being a vertical longitudinal section of the two parts of the mold in position. In forming the brush back, a plain strip of celluloid is placed in the matrix *G*, the section *A* being arranged over it, when the whole is given form by pressure between heated surfaces. The bristles are secured in the pockets *I* by means of wire in the customary way, after which narrow strips of celluloid are introduced into the grooves to fill the wire, the whole being welded into a single mass by heat and pressure. It is evident that the wire

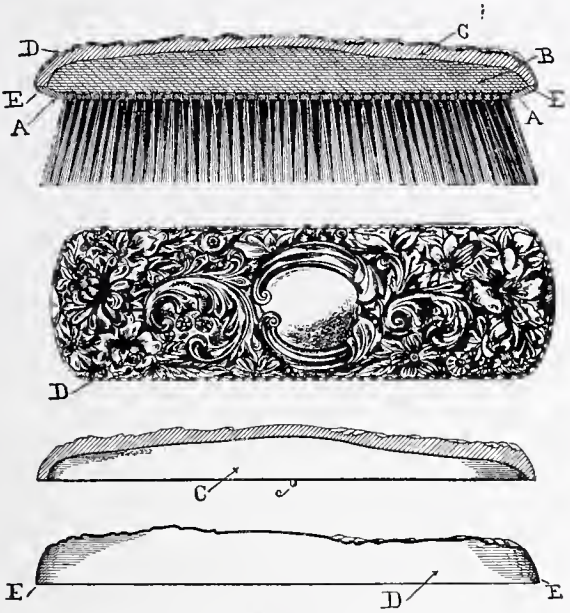

Fig. 246.—The Miller Celluloid Brush.

will be invisable only in opaque brushes. More recently, tooth and nail brushes of transparent material have been introduced on the market in which the wire is entirely absent, these brushes being produced, it is stated, by means of very expensive and complicated machinery.

H. Miller's process was intended primarily for the attachment of ornamental metal trimmings to celluloid brushes. In order to do this, a "brush shell" as it is technically called (*A* in Fig. 246)—in which the bristles have been inserted—is covered with a semisolid celluloid composition in order to fasten rigidly the bristles with a waterproofing layer.[1] After drying, the upper half of the brush shell (*C*), composed of a molded pyroxylin plastic, is securely attached to

1. U.S.P. 605185, 1898.

the lower half by a layer of pyroxylin cement, the parts being further united by pressure. The metallic trimming, in the shape of a thin ornamented silver sheet, is applied to the upper surface, when by heat and pressure the under celluloid is softened and takes the form of the ornamented silver sheet, thus forming a solid, waterproof back with metallic exterior.

The value of brushes made of celluloid by the above-described methods is that, unlike wood or any other material, there is no loss of bristles when damp. Celluloid hairs have been used instead of bristles, but are too costly to compete successfully with natural hair.

Celluloid Mirrors and Mirror Backs.[1] A great many attempts have been made to replace glass with a flexible and unbreakable substitute, but as yet without success, except for very limited uses, as in automobile screens. C. Koyl devised a process of preparing a mirror by silvering a highly polished celluloid sheet,[2] which although satisfactory for the particular use for which it was designed,[3] has never been used commercially for hand mirrors. The inherent defect in all silvered pyroxylin sheets is proneness to distortion of the image, and difficulty in depositing a reflecting film that will not peel.[4] In the manufacture of mirror backs from celluloid, thin blanks of plastic material are welded by means of heat and pressure upon the sides and edges of a core of less expensive material which has a seat for the mirror. In this manner a mirror back is produced having the desirable characteristics of one made wholly of celluloid, but less expensive, and which can be made more rapidly.[5] Mirror backs made of cellu-

1. See Koyl, "Celluloid Mirrors," Uhland's W. I., 1891, 6, 50.
2. U.S.P. 418136, 1889; Cf. E. Kipper and J. Edson, U.S.P. 299804, 1884.
3. Instead of a glass reflector in a parabolic semaphore (U.S.P. 384190, 1888). To increase the reflecting surface, the smooth sheet was double corrugated with wave surfaces. See U.S.P. 410598, 1889.
4. Instead of celluloid, an "amorphous cellulose" called "tamodine," prepared according to U.S.P. 264987, 1882, it is claimed, could be used.
5. H. Miller, U.S.P. 621360, 1899; for protecting surfaces of glass during manufacture into mirrors, while not entirely necessary, it is advisable during the beveling and subsequent processes, to protect the highly polished surface to be silvered from injury through handling and exposure to the atmosphere. While paint will adhere to glass, it is difficult to remove it from a highly polished surface without scratching from the grit and sand in the pigment. This may be overcome by applying a coating to the polished surface of a preferably black color (as it enables the workmen to observe when the beveled glasses are properly finished) over which a protective lacquer should be laid in order to insure perfect waterproof condition. The lacquer recommended consists of resin (as dammar or copal) 11, pyroxylin 1, mixed solvent (methyl alcohol, acetate and acetone) 44 parts. J. France (U.S.P. 478851, 1892) avoided the presence of a line or stripe of a different color from the exterior of the mirror back, caused during the molding and pressing operation by the outflow of the composition base at the miter joint or seam, by having the back composed of a single sheet of plastic and a strip of the same material around the edge. See also U.S. Serial No. 432586, filed May 11, 1892. For description and illustration of a die for making mirror, medallion, and similar backs of pyroxylin plastic, see H. Miller, U.S.P. 610630, 1898.

loid in this manner do not crack or break when subjected to sudden atmospheric changes, are impervious to moisture, and not liable to shrink or warp.[1] [2] Celluloid may be silvered [3] by immersing for seventy-five minutes in a bath of 50 parts potassium tartrate solution (5% aqueous) and 50 parts silver solution (silver nitrate 100, ammonium hydroxide 55, water to 1,000) and 1,000 parts water. The silvered articles may be afterward nickeled or gilded. To make the sheets more pliable small amounts of methyl or ethyl sebacate may be added.

Depositing Metallic Gold and Silver on Celluloid as described by L. Schwob and G. Dilette [4] consists in plunging the pyroxylin sheets into a bath of plating solution for one and one-half hours, the bath being made up as follows: 50 gm. sodium potassium tartrate (Rochelle salt) is dissolved in 1 l. water; 100 gm. silver nitrate and 55 gm. ammonia (strength not stated) are added to 1 l. water; the plating solution consists of 50 gm. of each in 1 l. of water. The silver-coated sheets are then placed in an ordinary gold- or nickel-plating bath and metal deposited electrolytically. After plating, the space on which it is desired any design to appear [5] is covered with a protective varnish and the excess of silver removed by means of dilute nitric or hydrocyanic acid. The varnish is now removed by a solvent, and the details of the design are worked in repoussé work. The portions of the design which are not to be gilded are again covered with varnish and gold deposited electrolytically on the exposed surfaces of the silver, the varnish being again removed. If a portion of the silver is to be oxidized, the remainder is covered with varnish and the articles immersed in a weak bath of ammonium sulphide.

Dental Plates and Clichés. J. McClelland, a dentist himself, produced the first dental plate of collodion,[6] but there was so much ether and alcohol in the formula he used that the warpage and distortion were so great the plate would not comfortably fit the patient's mouth, even after the greatest care had been exercised in obtaining an accurate cast of the roof of the mouth. L. Streeter, another dentist, tried to remedy this distortion by veneering the collodion on a dental plate of other material,[7] but it was soon found that the

1. H. Miller, U.S.P. 345982, 1886; J. Hyatt, U.S.P. 286541, 1883, "Metallic Reinforcing of Celluloid Mirror Back."
2. H. Miller, U.S.P. 592877, 1897, "Construction of Celluloid Mirror Back." For manufacture of celluloid mirrors, see L. Schwob and G. Hébert-Dillette, F.P. 359001, 1905.
3. Gum. Zeit., 1907, July 19, p. 20. For "Coating Brush Backs with Celluloid," see Stübling, Z. Bürsten., 1898, **17**, 177.
4. F.P. 359001, 1905; abst. J.S.C.I., 1906, **25**, 323.
5. Schwob and Dilette, F.P. 364559, 1906.
6. U.S.P. 77304, 1868.
7. U.S.P. 88228, 1869.

thin pyroxylin film became detached during the process of mastication, and that particles of food were prone to lodge under it. He next tried to overcome the shrinkage [1] by the use of large amounts of zinc white and other pigments, in the proportion of pyroxylin 240, wax 50, zinc white 30, and coloring matter. Still having trouble in shrinkage of the dental plate during elimination of all traces of solvent, the next step was to place the plate in a die [2] and keep it there until all the solvent had dissipated. But a die made to fit accurately each individual's mouth was entirely too expensive. During all this time the art was gradually growing, for by repeated failures, suggestions came to other people.[3]

The first satisfactory dental plates were made by Hyatt by means of a stuffing machine and a camphor-containing plastic, the stuffing machine consisting of a cylinder which at one end tapered down to a nozzle having a half-inch orifice. This nozzle was surrounded by a jacket for about 8 in. of its length which was filled with oil, heated by a gas jet. The other end of the cylinder was fitted with a cap through which a screw ran, on the end of which was the piston. The plastic was placed in this cylinder, the piston inserted and the cap screwed on. Pressure was applied by twisting the screw with a lever, which forced the material through a heated nozzle. The dental plate molds were screwed on the end of this nozzle, after having previously been heated on a stove.[4] The material forced into these molds was removed from them in the shape of the ordinary dental plate blank, after the molds had cooled.[5] By means of the more modern stuffing machines described elsewhere in this work, but with essentially the above principle, dental plates of pyroxylin plastic are being made in large quantities at the present time.[6]

1. U.S.P. 88260, 1869.
2. U.S.P. 89253, 1869.
3. U.S.P. 89254, 1869; 173865, 1876, unsuccessful attempts to produce a dental plate of shellac, the ptyalin of the saliva dissolving the shellac. 152232, 1874, J. Hyatt's method; 114242, 1871, in which the camphor is expelled by long heating, on the supposition that it imparted a disagreeable taste to the plate.
4. The molds were heated in a furnace until about as hot as a flatiron used in ironing clothes, or heated to that degree that spittle when applied with the finger will give a hissing sound. Water was added to the original mixture of camphor and alcohol to separate the alcohol from the camphor by its superior affinity for the alcohol. The removal of this water was often tedious, and when moisture was present it would be shown by steaming when passing through the stuffer If so, the dental plate lacked strength, crumbled, and had to be run through the stuffer several times. See U.S.P. 113055, 121522, 1871, for method of molding dental plates.
5. The Albany Dental Plate Co., formed at that time, has been in continuous active existence and is to-day producing in Albany, N. Y., celluloid dental plates.
6. It is stated that celluloid dental plates are colored with cinnabar, a mercuric sulphide. The literature contains statements of salivation and other symptoms of mercurial poisoning as having been traced to the mercury present in the red

The exact impression of the gums and jaw is made by the usual plaster of paris method, the negative thus obtained being used for the preparation of the plates. In making these plates the celluloid is heated until plastic, then firmly pressed upon the plaster cast by mechanical means, where it remains before removal until the plastic and cast have cooled. D. Lichtenberg-Madsen [1] uses a special kind of celluloid which contains about 70% nitrocellulose, 25% camphor and 5% resinous oil, from which the negative is stamped. The negative thus obtained is used as the matrix for the stamping of another celluloid plate, no tendency to adhere when pressed together being experienced, so it is claimed. The latter plate contains 35–50% camphor, in which an impression of the original is obtained. Autotype clichés reproducing the fine lines of the net may thus be obtained in celluloid. The antiseptic and perfumed dental composition of L. Eilberston [2] consists of a nitrocellulose base combined with sodium bicarbonate, salol, iodoform, and essence of rose, and is used for temporary tooth fillings. It would require considerable essence of rose or other perfume to mask effectually the taste and smell of iodoform.

Pyroxylin Plastics in Surgery.[3] D. Ghiulamita in Revue d'Orthopédie has shown the advantages which pyroxylin plastics have over plaster of paris, steel, wood and the other rigid materials, in constructing proposed permanent and immovable corsets (used in the surgical sense of a band to support the trunk) in those surgical complications in which it is necessary to support accurately the parts for a considerable period. Celluloid may be used in portable orthopedic apparatus either as plates or fluid solutions. The plates, first recommended by Wian, are little used at the present time on account of the difficulty in molding them accurately to take the form of the affected part, and it must be evident that any support which does not fit accurately is practically valueless, and often dangerous. The proper adjustment of plastic plates also requires somewhat complicated

coloring matter in dental plates. The author has examined several dental plates of celluloid, in which no mercury was found. The pink color may be produced by the use of the "azo" organic dyestuffs, which are insoluble in water, unaffected by weak alkalis and enzymes and have no marked physiological action. J. Dixon, U.S.P. 608512, 1898, has patented a celluloid press and vulcanizer.

1. E.P. 25519, 1899. See also J. Schmidting, U.S.P. 725879, 1903, for process of making clichés in high relief with gelatin negative, sensitized with alcoholic silver nitrate, dried, treated with hydrogen sulphide, swollen with water, electroplated, gelatin removed, cast taken and a celluloid printing surface made from the cast.

2. U.S.P. 825268, 1906; E.P. 14475, 1900. For celluloid clichés see Archiv., 1879, **16**, 223.

3. For the application of celluloid in the manufacture of cliches, see Jannin, Technol., 1880, **40**, 264; Impr., 1880, **17**, 107; Archiv., 1880, **17**, 211. 243, 245; Gew. Bl. Würt., 1880, **32**, 310; J. f. Buchdr., 1880, **47**, 690; Printer, 1880, **1**, 78; Lorsch., J. Buchdr., 1901, **68**, 76; Z. Reprod., 1901, **3**, 77.

apparatus for their comfortable fitting. The solutions introduced by Landerce and Kirsch are more often employed, the celluloid being dissolved (preferably in acetone), in which antiseptic gauze bandages are soaked, and used to cover the models. The value of all orthopedic apparatus depending on the accuracy with which every portion of the contour of the body is duplicated, and especially inflamed portions or the articulations, an accurate model is the first requisite. The method of forming the cast or negative model depends upon the fulcrum or point upon which the base is to rest. If the corset is to reach to the armpits the patient is raised by the apparatus of Sayre, a ribbon of zinc is wound around the trunk of the body a number of times, and made rigid by filling in the interstices of the zinc bands with moist plaster. When the plaster has hardened the corset thus made is cut into halves, the edges adjusted, and the whole covered with muslin when the corset is finished. Latitude for abdominal and thoracic breathing must, of course, be provided where the lungs are involved. Care must be taken in the formation of the model, that the diseased parts are given the minimum pressure by a proper distribution of the points of support, the latter usually being the bones of the hips, knees, and feet.

When the model is finished it is placed in a vertical position, plaster poured into it, and after hardening, the outer negative is cut away, leaving a positive model, the counterpart of the patient's body. The surface is polished and the dimensions corresponding to the diseased portions of the body carefully verified. A thin coating of gypsum may be laid on the parts corresponding to the stomach and chest of the corset to give a little play, and when the model is dry it is covered with the celluloid solution.

If the patient is to have a tricot [1] or stockinet beneath the apparatus, the model is first covered with an elastic cotton fabric and of almost impermeable linen, to prevent the tricot adhering to the moist celluloid. Then a knitted fabric is stretched over the model, and the celluloid solution (strength about 10–25% by weight and depending on the viscosity) is applied with a rag or brush, the meshes of the cloth being entirely filled. Another layer of knitted cloth is then stretched over this, filled with celluloid, and this superposition continued until the desired rigidity is obtained. Usually 3–10 mm. is of sufficient thickness. It is preferable to allow the corset to dry at a moderate degree of heat in order to obviate any tendency to buckle and distort. When perfectly dry it is cut into two or more portions and applied to the body of the patient. The use of celluloid is

1. A knitted fabric of woolen, silk, etc.

not limited to the production of large pieces of orthopedic apparatus but may be employed to make soles for flat and deformed feet. The great advantages of celluloid over all other proposed materials for this use are its light weight, resiliency combined with sufficient rigidity, impermeability to water and resistance to medicaments, and especially the simplicity of construction of the most intricate pieces. The raw materials are comparatively inexpensive, a child's corset, for instance, lasting from three to four years. A large piece of apparatus seldom weighs over 400 gm. The inflammability of celluloid is no disadvantage in this instance, the heat of the body being insufficient to soften the plastic. Celluloid supports are especially indicated where it is not required to keep the part absolutely rigid, as in paralysis of the lower extremities, especially hemiplegia. These corsets are used in cases of Pott's disease, in scoliosis, and in fractures of bones of all ages. If necessary they may be stiffened by bands of steel. According to the patented process of F. Herring [1] the fractured member is first wound with a layer of loose cotton, over which is laid a sheet of celluloid of sufficient size, which has been first made plastic by immersion in hot water. This is fitted closely around the fracture, another softened sheet applied, and this continued until a sufficiently rigid support has been prepared. The bandage may be braced by the judicious insertion of strips of heavier celluloid, previously softened by heating. The method of Bersin in using celluloid as a bandage material consists in softening the plastic in warm alcohol instead of water, but in this process it is necessary for the alcohol to evaporate before rigidity is obtained. Celluloid eye bandages have been advocated by Schrieber, the advantages claimed being that they are lighter than aluminum, are unaffected by sublimate and other antiseptic solutions, and may be readily disinfected. Dawbarn [2] recommends covering defects in the skull by transparent celluloid in which the camphor, which is liable to induce irritation, is replaced by synthetic urea. The plate is first softened in hot water, then molded to the cranial contour, and after hardening, may be accurately trimmed to fit the aperture.

Celluloid Boxes. In the formation of transparent or colored moldings for covering chocolate, bonbon, or other boxes and which contain right angles, as distinguished from the trays and dishes previously described, use may be made of the method first suggested by

1. D.R.P. 116628, 1900.
2. Ann. Surg., Apr., 1903; see also Lorch, Graph. Beob., **9**, 771; Impr., **37**, 150. For manufacture of firm celluloid bandages, see Am. Apoth. Z., 1901, **22**, 121. See also Gum. Ztg., 1899, **13**, 633.

A. Hafely and J. Redlefsen,[1] in which the celluloid sheet, either plain or embossed, is laid face down across a heated die (*D* in Fig. 247), with the wooden or other backing on top. The backing and celluloid are forced into the die, which turns up the celluloid edges and fastens them firmly to the backing. The projecting edges are then turned down by means of any suitable hand instrument, and the operation is complete. If the celluloid contains no backing, it is cemented by means of a pyroxylin lacquer. If it contains a backing of paper or muslin, glue is used as the adhesive. If the plastic has been embossed, felting or other soft cushion *F*, is placed within the die to prevent injury or obliteration of the embossing.

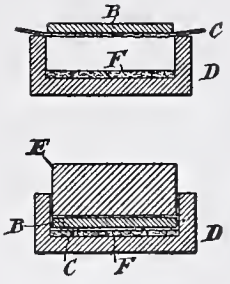

FIG. 247. — The Hafely Method of Making Celluloid Boxes.

Golf Balls of Celluloid. A golf ball, as is well known, is required to have a certain diameter, and at the same time a given weight and degree of elasticity. The weight must also be distributed uniformly throughout the mass, or the ball when hit will not fly true, but have a tendency to curve or sail, and thus impair the accuracy of the stroke. One of the inherent objections to gutta percha balls is their natural dark color, which limits their whiteness to the paint on their surface. As soon as this is removed by use the ball is practically worthless for accurate work, or is so nearly the color of the grass and ground as to be easily lost in play. The natural softness of gutta percha, or the excessive brittleness when too highly vulcanized, renders a large percentage of manufactured balls unsuitable. Pure celluloid has been used to cover a core of other material or to form the core itself provided with a covering of other material; but the manufacture of such golf balls is more or less irregular and complicated, especially in one of the essential properties—predetermined diameter. It has been found that the specific gravity of a solid pyroxylin ball is too great, as it interferes with its carrying properties and presents too wide a variation from the lighter-weight balls to which players have become accustomed. In order to overcome these objections [2] celluloid or similar plastic in the soft, uncured state is taken, and roughly formed into a ball of about the weight desired in the finished product. The soft ball is then seasoned until it has an outer skin or rind of fairly hard material of about $\frac{1}{8}$ in. in thickness, the interior of the ball still

1. U.S.P. 505462, 1893; A. Hafely, U.S.P. 488630, 1892.
2. Process of J. Stevens and C. Thurber, U.S.P. 713168, 1902.

remaining in the unseasoned condition. The ball is then locked in a die or chamber, and the die heated uniformly, preferably by steam. The effect of this treatment is to vaporize and hence expand the liquid solvents in the interior of the ball, thus creating an internal pressure which swells the mass of material so that it fills and takes the impression of the die and at the same time creates a porous interior in the ball. The object of the seasoned exterior shell is to prevent the escape of most of the solvent and the formation of surface blisters. A plastic celluloid should be used which does not depend upon the liquid solvent for its moldable properties.[1] The ball is removed from the die and further seasoned by exposure to the atmosphere, until it is reduced to the desired weight.[2] The successive steps are shown in Fig. 248.

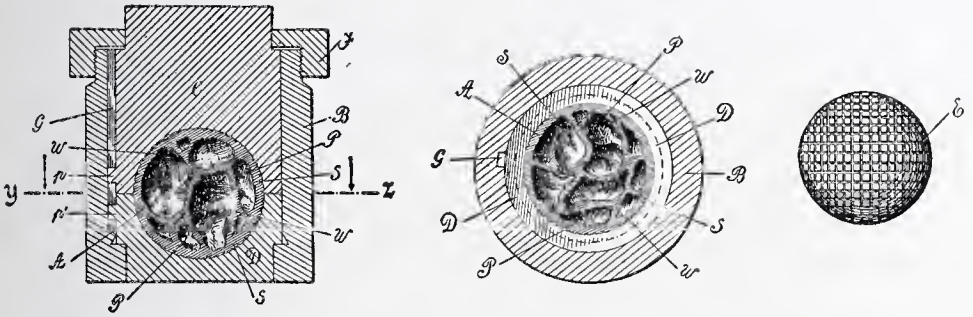

Fig. 248.—The Stevens & Thurber Process for Making Celluloid Golf Balls.

In the C. de Büren process[3] a ball of the prescribed diameter (40–45 mm.) and proper weight (40–45 gm.) is produced by first forming a homogeneous hollow sphere having a composition of celluloid 70,

1. The pyroxylin compound containing camphor is best, since it will readily soften and swell under heat and the expansive pressure of its internal gases, no matter how hard the outer shell or rind of the ball is dried. The period of drying and formation of this hard exterior shell can be varied according to the softness of the material or the amount of liquid solvent it is desired to retain and utilize in the interior of the ball. As the non-shrinkable condition of the ball is improved by this preliminary hardening, it should be carried as far as possible without interfering with the subsequent expansion of the liquid solvents contained in the interior of the ball. By holding the ball under heat for a suffieient length of time a large part of the expanded solvent will gradually find its way through the eelluloid and escape by means of vents in the die, because celluloid under pressure will permit the passage of a moderate amount of solvent without blistering.

2. In cases where the operator through laek of judgment in the preliminary formation of the outer hardened shell cannot be depended on to make a ball which will remain round after leaving the die, it may be formed a trifle larger than the size required, as the ball ean be turned or molded to the right size after it is seasoned. By varying the length of the seasoning process and hence the amount of volatile solvents contained in the mass, it is possible to so control the speeific gravity of the ball that it may float or sink in water. A low boiling point solvent, like ether or wood alcohol, is best, because it volatilizes at comparatively low temperatures, and hence expands more readily upon the applieation of heat.

3. U.S.P. 786343, 1905; see also process of E. Kempshall, E.P. 2052, 1902.

and a mixture of lead carbonate and sulphate 30, by weight; 40–45 gm. of this mixture is poured in the usual manner into a mold to form a hollow sphere, the outer edges of which may be plain, corrugated, or striated.[1]

Celluloid Billiard Balls. In addition to the processes described under "Coating Articles with Celluloid" some of which are applicable for the manufacture of solid spherical bodies, may be mentioned the "Hyatt Gun Method," as described by J. Hyatt, in U.S.P. 239792

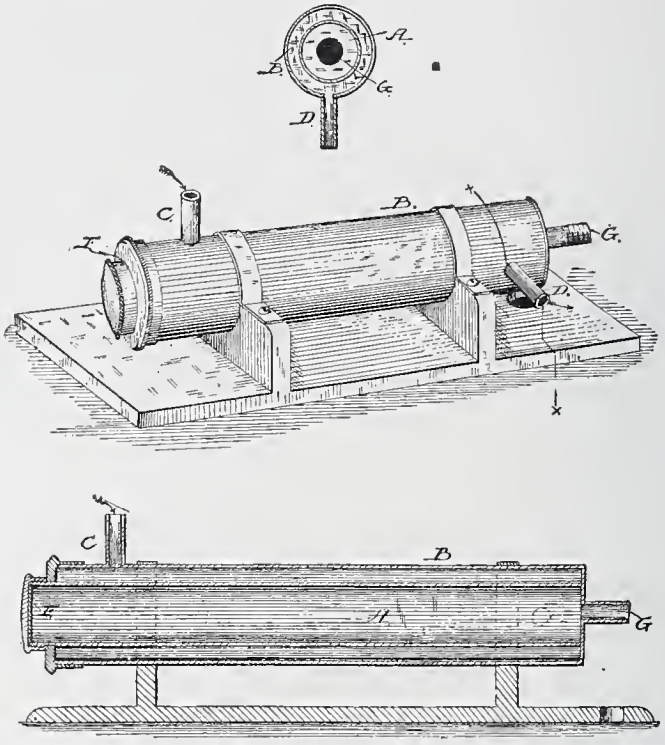

Fig. 249.—The "Hyatt Gun Method" of Celluloid Billiard Ball Manufacture.

of 1881. The novelty of the process consists in the application of heat and pressure through the medium of a liquid, no die or mold being required, the material being protected only by means of a rubber bag in which it is inclosed. In the formation of billiard balls (see Fig. 249) a mass of round plastic is inclosed in a rubber bag which is inserted in the vessel, the opening *F* being closed. The water or other liquid is then admitted, and steam let into the jacket *B*. When the desired temperature has been reached, hydraulic pressure is applied, exerts itself equally on all sides and the round mass is pressed into a hard ball, the heat causing the traces of solvent in the ball to

1. For manufacture of celluloid ping pong balls, with excellent cuts of forming press, see J. Misko, Am. Mach., 1902, **25**, 1690.

volatilize. Water or other cooling agent is finally introduced and after the ball is cooled it may be dried, seasoned, and finished by turning or otherwise. The amount of pressure employed varied from 2,000–4,000 lb. per sq.in., according to the nature of the material to be molded.[1] With the method of producing hollow balls, according to Hunæus,[2] a number of hemispherical projections are stamped by means of a die in a sheet of celluloid, when by means of another die the flat portion of the resulting sheet is removed, leaving the hemispheres ready to be joined into balls.[3] Large numbers of "parlor tennis" and "ping pong" balls have been made in this way.

Celluloid Stays. An objection to a large number of the materials used in the manufacture of corset stays and analogous articles used in wearing apparel as stiffening or supporting agents is that it becomes necessary to remove the stay before washing in order to prevent its injury by water or soap, as in metallic supports, while kid-tipped stays are absorbent and unhygienic, and whalebone loses its resiliency after a time. The above objections do not apply to celluloid stays, whether made from metal efficiently waterproofed, or solid celluloid strips. Thin strips of steel reinforced at the ends with celluloid, the entire mass being finally enveloped in a transparent celluloid sheet by combined heat and pressure, are considered the most satisfactory and durable. The previous tipping with celluloid removes possibility of the sharp metal wearing through the plastic covering and cutting into the cloth.[4]

Celluloid Trays and Dishes. As an example of a general and satisfactory method, that of C. Thurber and C. Schaefer[5] may be mentioned. All kinds of trays, dishes, or other receptacles may be made of celluloid by this method, whether ornamented or not. A blank of celluloid intended to be worked into a tray (*A* in Fig. 250) is placed in the die and pressed as shown. It is advisable to cut the outer edge of the sheet flaring, as the preliminary definement of the edge eliminates subsequent forming or trimming, and adds to the ornate appearance of the flaring rim. The die or mold is heated either before insertion of the blank or by steam attachment, pressure

1. Hyatt's test for rotundity and homogeneity of structure in a billiard ball was to float the ball on dry, clean mercury. To be satisfactory, a ball must stand motionless in the mercury, irrespective of how it is turned.

2. E.P. 10675, 1892.

3. U.S. Customs Decisions of Apr. 30, 1903, on hollow balls made of celluloid which were assessed for duty under paragraph 17 of the Tariff Act at 65 cents per lb. and 35% ad valorem as "manufactured pyroxylin." The Board, following a previous decision, held that they were in fact toys, and, as such, were specifically provided for in paragraph 18 at 35% ad valorem.

4. "Process of Celluloid Stay Manufacture," M. Lefferts, U.S.P. 238927, 1881.

5. U.S.P. 542452, 1895.

applied and the blank left until cool. By varying the shape and edge of the blank, various flutings, corrugations, scallops, and serrations may be made, to add to the beauty of the design. All manner of card and pin trays, ash receivers, and small receptacles may be made by diversifications of this general method.

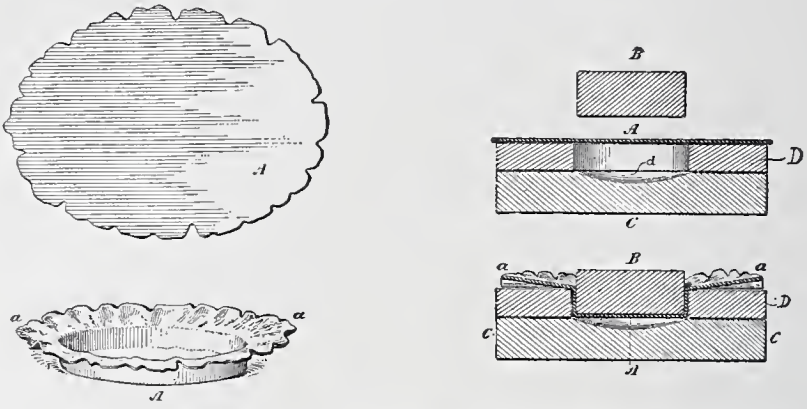

Fig. 250.—Forming Celluloid Articles (The Thurber & Schaefer Process).

Manufacture of Celluloid Dolls. In the manufacture of dolls, either in one piece or articulated, each member is prepared by molding [1] so that the celluloid appears on the surface, the sections being fastened together by wire. After molding, the heads have a glazed look, more resembling those of crockery or china dolls. This gloss is removed by rubbing with fine pumice stone, which gives the features a more natural and flesh-like appearance. If the eyebrows and lines

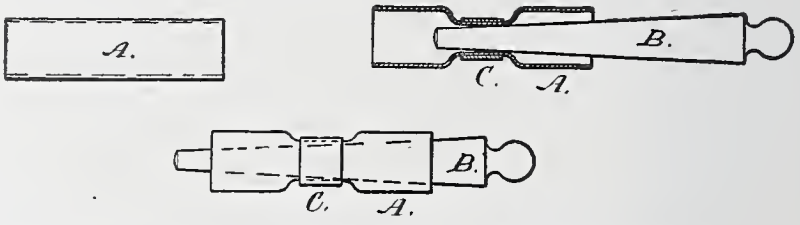

Fig. 251.—The Carpenter Process of Necking Celluloid Tubes.

indicating the hair have been put on before the pumice is used, the hair lines will often be rubbed off by the attrition of the powder; or if the lines are put on after the surface has been abraded, they may show rough and uneven. To remedy this,[2] fine incisions may be made in the surface for the hair lines by means of a sharp-pointed knife held at an oblique angle from the doll's face, and into the incisions the coloring matter representing the hair and eyebrows is worked.

1. M. Lefferts, U.S.P. 237559, 1881. 2. W. Carpenter, U.S.P. 235932, 1880.

This is usually a finely divided pigment in a fusel oil solution of a resin, as dammar or copal, and must be a non-solvent of celluloid but must harden when dry. The surface may then be pumiced and tinted until it takes on "the natural bloom of health and beauty."

In necking or contracting celluloid tubes[1] at certain points, where the material is to be used for dolls' heads and two dolls are to be molded from one tube, the center between them is first reduced for the neck of the doll. The important part of the method consists in appliances used to prevent the wrinkling or folding over of the tube at the point of contraction as shown in Fig. 251.

The tube is softened by heating, usually by plunging it into hot water, when a taper mandrel, *B*, is put inside of it and an elastic clamp, *C*, is put about it, which tends to contract the tube. The mandrel nearly fills the tube where the clamp encircles it, and this prevents the wrinkling of the celluloid under the strong pressure of the clamp. As the material contracts under the clamp the mandrel is gradually drawn out, bringing a smaller part under the clamp, allowing of the further contraction required without wrinkling. This is of great importance, as a wrinkle once made cannot be worked out, and the goods are therefore spoiled. K. Strandfuss[2] prepares a fluid collodion mass for the manufacture of dolls' heads by mixing a solution of 1 k. of celluloid in 1 k. acetone, with 250 gm. magnesuim oxide, 50 gm. purified chalk and 250 gm. glycerol, together with some ether and alcohol. The mass is said to fill the molds well and harden in three hours after subsequent drying at 50°. The pigments also materially reduce the inflammability of the plastic.

Manufacture of Syringes from Celluloid. The barrel is formed of a cylinder of plastic material, preferably translucent celluloid,

FIG. 252.—Celluloid Syringes, according to Lefferts.

with a nozzle *B* and piston *D* (Fig. 252). In the construction of the barrel, the celluloid in a plastic state is forced from a nozzle around a metallic mandrel[3] having a polished surface, the material issuing in tubular form and snugly fitting the mandrel. The threads are then cut at the ends of the barrel to receive the mountings, the nozzle being formed in the same manner as the barrel.[4]

1. W. Carpenter, U.S.P. 235932, 1880. For manufacture of artificial ears from celluloid, see Corresp. Zahn., 1902, **31**, 219.
2. D.R.P. 137891, 1903. 3. M. Lefferts, U.S.P. 235953, 1880.
4. See G. Otto (U.S.P. 235958) for celluloid catheter, syringe, or (U.S.P. 235959, 1880) pessary.

Celluloid Emery Grinding Wheels. Before 1875, when the Hyatts first patented their celluloid grinding wheel, these wheels were made of particles of emery consolidated and molded into shape by the addition of glue, rosin, or india-rubber. It was found that such wheels were liable to glaze and lose their sharp cutting surface, in consequence of the adhesive material used to cement the particles together becoming soft and spreading on the surface, either by friction and warmth, or the action of grease frequently present in grinding and polishing operations. To overcome these objections, the Hyatts mixed the polishing material intimately with celluloid, then molded into form by heat and pressure.[1] Usually pulverized celluloid was first mixed with the emery, a small amount of camphor in alcohol added to moisten the mass, which was then molded. If the wheels were of considerable thickness, the drying process to eliminate solvent was found to be a tedious one. By making the wheel of a series of united disks or layers, each disk having been previously seasoned or cured, the period of final drying was materially lessened.[2]

Celluloid Linings for Ice Pitchers to take the place of those of glass or porcelain (Fig. 253) and superior to them in the fact that celluloid is a very poor conductor of heat[3] and there being no liability of breaking, the celluloid lining may be very thin, thus not perceptibly decreasing the capacity of the vessel as with the thicker glass and porcelain linings. If the celluloid in a liquid state is used, the method is simply varnishing the interior of the perfectly dry vessel with two or three coats of a heavy pyroxylin lacquer, allowing the coats to harden before the next one is applied. If sheet celluloid is used, the bottom is first cut, softened by heat and pressed on the container which has been miostened with a small amount of solvent. The sides are attached in a similar way, and the junction between the bottom and sides made water tight by touching with a heavy pyroxylin lacquer. Such linings are sanitary, unbreakable, light in weight, and odorless, and do not chip or craze after long usage.

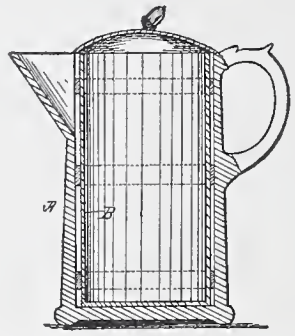

Fig. 253.—Lefferts' Method of Celluloid Lining of Ice Pitchers and Vessels of a Similar Nature.

1. J. & I. Hyatt, U.S.P. 165234, 1875.
2. I. P. Brown and A. Sanborn, U.S.P. 187593, 1877. These wheels did not prove the success their inventors hoped for, and after several accidents during their use, manufacture was abandoned.
3. M. Lefferts, U.S.P. 219279, 1879.

Celluloid-Coated Piano Keys. According to Hyatt's method [1] a whole keyboard can be covered at one operation, as shown in Fig. 254. The exposed upper surface and edge of the keyboard blank is covered with a sheet or roll of celluloid, the wood being first moistened with amyl acetate or other pyroxylin solvent to give a more perfect union. After the cemented sheet has hardened and dried, the blank is sawed or otherwise severed into sections and *A* becomes *B* in

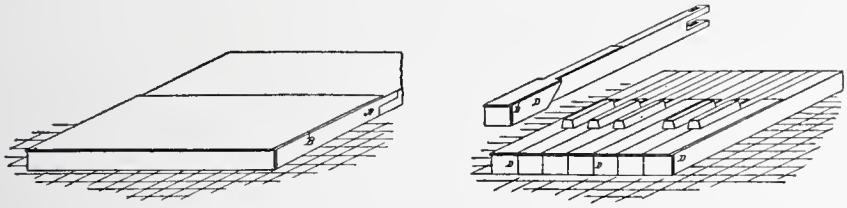

A *B*

Fig. 254.—Making Celluloid Piano Keys.

appearance. This entirely obviates the old and tedious operation of covering a single key at a time.[2] To increase adhesion, the celluloid sheet may first be warmed, the desired design being impressed upon the keys by means of suitably shaped dies or instruments. As the celluloid cools it contracts and hardens. Finally the attached sheet may be given a high polish.

Pyroxylin Plastic Moldings. The moldings used in the construction of show cases, show windows and for similar purposes, are usually coated with a thin sheet of brass or German silver. Such moldings are easily soiled, especially when handled, and it is essential that they be kept in an attractive condition. R. Johnston has invented a celluloid molding [3] intended to overcome most of these objections, which consists of a thin celluloid exterior fastened to a metal-backed or wire interior which makes the member sufficiently durable to be bent in any desired form. For octogonal and other strictly angular moldings the metal backing is usually unnecessary, but is required for those known as "ogee," "ovolo," and other forms in which curved lines occur.[4]

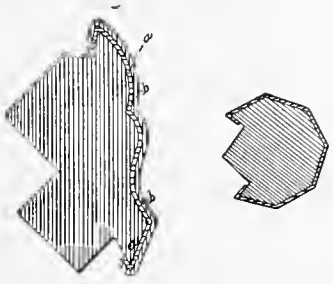

Fig. 255.—Manufacture of Celluloid Moldings.

1. U.S.P. 210780, 1878.
2. In securing the scroll upon the blank or board, care should be exercised to see that it is firmly cemented at every place in order that it may not be torn off or otherwise displaced in the operation of cutting out the individual keys.
3. U.S.P. 217111, 1879.
4. Fig. 255 shows a coated molding having an ogee curve.

Colored Celluloid Screens for Photography. According to F. Lehner,[1] the dyestuffs hitherto used for coloring transparent celluloid have been soluble in strong alcohol, and have possessed the disadvantage of allowing "spreading" of the color beyond its own limits when used for multicolor screens. According to this invention, certain dyestuffs [2] are used, which are readily soluble in water, but practically insoluble in alcohol. The celluloid is milled with alcohol diluted with as much water as practicable, and the dyestuffs, either solid or in aqueous solution, incorporated with the plastic mass. When this is homogeneous it is then formed into films which are slowly dried. Finally the films are softened by exposure to the vapor of alcohol and the rolling process completed.

Celluloid Playing Cards. The first pyroxylin playing cards were made by Hyatt in 1879.[3] Before this time, the better class of cards had been made of heavy paper, and while sufficiently opaque, they were prone to warp, crease and break with ordinary usage, were readily soiled when printed, and did not possess in a marked degree the quick, elastic action which is one of the most important characteristics of a good playing card. Hyatt was enabled to overcome many of these defects by taking a piece of sheet celluloid of the required thickness and opacity, upon which the desired lettering or design was applied by use of a horizontal bed and a platen press. The card was then covered with a celluloid solution of the consistency of varnish, either by brushing or dipping, the surface was polished by pressure between heated plates after drying.[4] The lacquer, while it made the imprint indelible, also added to the cost and made an additional operation. The next year N. Hart and R. Bacon patented their method of decorating celluloid by means of a solvent ink [5] and followed this by a method of preparing celluloid playing cards,[6] in which the design was applied directly to the celluloid surface, this being the final step in manufacture.

The foundation of their card was linen paper, which was coated

1. E.P. 7629, 1908.

2. The dyestuffs specified as satisfactory for this purpose are: for red, ponceau F.R. (L. Cassella & Co.) or ponceau 4 R (Meister, Lucius & Brüning); blue, silk blue (seiden blau R, Cassella) or cotton light blue O (Meister, Lucius & Brüning); green, conc. acid green D (Meister, Lucius & Brüning), or naphthol green B (Cassella); yellow, naphthol yellow S (Badisch Aniline Co.), or acid yellow G (Badisch Aniline Co.). See also Chapter XVII.

3. J. Hyatt, U.S.P. 218122, 1879.

4. To avoid warping, the sheet was fabricated as described in U.S.P. 199908, 1878 (which see), taking care to make the entire surface of the sheet as even as possible.

5. U.S.P. 233851, 1880; E.P. 4874, 1880, the preparation consisting of phenol 60, aniline color 2, to which was added an equal volume of alcohol, ether, or both.

6. U.S.P. 241004, 241005, 1881.

with a fluid celluloid composition in the usual manner. The surface was then decorated by direct printing, using an ink composed of an aniline or other dyestuff dissolved in phenol. As the latter is an energetic solvent of celluloid, the fluid upon evaporation left the coloring matter intimately imbedded in the plastic substance with which it had united. Any dyestuff soluble in carbolic acid could be used, or more broadly, any dyestuff soluble in a slowly evaporating pyroxylin solvent. To facilitate penetration, a small amount of alcohol or ether was added to the phenol crystals (the liquid form not being used). The alcohol or ether acts in a measure like a drier, in that it enables the colors to dry rapidly and before they have an opportunity to spread or blur. The speed of drying may be regulated by the proportion of ether to phenol; increasing the latter decreases the speed of drying.

Celluloid in Optics. In the manufacture of eyeglass frames, opera glasses, lorgnettes, microscopes, and telescopes, the pyroxylin plastics have found extensive use. The J. Spencer process for making optical frames of celluloid is typical.[1] The latter is brought to the plastic condition by application of a steam or alcoholic bath, hot air, or other form of heat, the material, when plastic, being expelled from a nozzle under hydraulic pressure upon a steam table, where it is rolled or cut into sheets of the required thickness. These are carried under knife edges while lying in single thickness upon a table and by rapid strokes, flat oblong bands are produced. They are then rapidly stretched over a mandrel or index gauge, and cut into the desired shape. After hardening the frames may be trimmed, polished, and finished in any desired manner.

Celluloid Phonograph Cylinders. It has been found difficult to use celluloid to advantage for the formation of sound records, because of its hardness and the difficulty of treating the surface so that it could be cut into. It has been claimed also that the porous nature of certain plastics unfit them for use in records. To correct these defects, it has been customary to dip the disk or cylinder in a slowly evaporating celluloid solvent, as amyl acetate, to soften the exterior, before the cutting, plowing, or engraving is commenced. It has been noticed, however, that the application of solvent solutions alone often renders the plastic surface gummy and sticky, so that it cannot be cut clean and distinct without clogging the plowing instrument. To overcome this, A. Petit [2] combines with the solvent (amyl acetate)

1. U.S.P. 220502, 1879. For the preparation of dichroic luminescents for fluoroscopes, in which the phosphorescent materials are dissolved in an acetone solution of celluloid, see Bull. Rouen., 1897, **25**, 386.

2. U.S.P. 662961, 1900; E.P. 22867, 1899.

a fatty body (oleic acid, olive, corn, or cottonseed oils, perferably oleic acid) in the proportion of one of fatty acid to two of acetate, this proportion forming a homogeneous mixture. The cylinder or disk is then dipped in this and exposed to the air for a few minutes in order for the solvent to act on the celluloid surface, when, it is stated, the following or reproducing style employed will be enabled to cut readily into the surface in the usual manner in making reproducing records.

In the F. Capp's method of manufacturing celluloid records [1] the invention is based upon the fact that celluloid expands considerably when softened by the admixture or the application of a solvent.[2] The method is the same, whether the cylinder or disk consists of vertical irregularities characteristic of "graphophone records" or of lateral undulations characteristic of the type known as "gramophone records." First a cylindrical matrix is taken that contains upon its inner face a cast or copy in reverse of the original sound record.[3] A celluloid cylinder is next inserted into the matrix, and both dipped into a celluloid solvent, holding them there for a sufficient time to soften the celluloid surface. By then removing from the bath and setting aside to dry, it will be found that in softening the celluloid cylinder has expanded and the softened surface (which is held closely against the matrix interior surface where the record impression is) will be found to have entirely filled the minute irregularities of the matrix surface. When the celluloid is thoroughly dry, it is separated from the matrix in any convenient way, and it is said upon its outer surface will be found a faithful copy of the original sound record. By replacing the celluloid by a mixture of celluloid and stearic acid, or celluloid and Japan wax, the cylinders reproduce the original more perfectly, and give a purer, more resonant, and human-like tone. The stearic acid or wax is incorporated with the celluloid before the conversion of the pyroxylin.

In one method of reproducing phonographic records an electrotype of a wax record is made. This is in a cylindrical form, with

1. U.S.P. 689536, 1901.

2. By a manipulation of various latent pyroxylin solvents it is possible to produce a plastic with any given softening point between 45° and 175°, therefore the congealing point of mixtures of waxes can be closely approximated by varying the latent solvent.

3. The matrix may be formed by casting, or by depositing upon the surface of the original record a film or coating of chromatized gelatin, formaldehyde gelatin, or gelatin treated with hexamethyletetramine. The greatest difficulty experienced in the manufacture of these records is the impossibility of eliminating all the solvents from the plastics, so that the records buckle and warp sufficiently to interfere with the acoustics of the record. For description of duplicate sound record of homogeneous and non-laminated nitrocellulose with a cast sound record upon its exterior see J. Aylsworth, U.S.P. 953454, 1910.

the negative of the record of the matrix upon its interior surface, and is reinforced by a strong surrounding metallic cylinder. A celluloid cylinder of about the diameter of the interior of the matrix is now placed inside of the electrotype and expanded until the record has been impressed upon its outer surface. It is now desirable to withdraw the celluloid cylinder without injuring the delicate record upon it or upon the matrix. George H. Stevens [1] claims to have discovered that if the metal mold, with its inclosed celluloid cylinder, be immersed in water at a temperature close to the boiling point, the celluloid cylinder will contract in diameter without warping and that the surface will remain true and smooth, one immersion being sufficient to contract a cylinder from $1\frac{3}{5}$ in. in diameter as much as $\frac{1}{8}$ in. The celluloid cylinders used are made by being drawn or pressed through a die while in a plastic condition. They are then stretched to the required diameter by being forced over a cylindrical die while still in a plastic condition and allowed to cool and set. The patentee believes that this mode of manufacture may have an influence in adapting them to contract on being reheated. However, a celluloid cylinder that has not been stretched or expanded in the direction of its diameter will also contract on being heated. The immersion in the water should be for a short time in order that only the requisite amount of contraction may take place, for if the heating is continued too long the cylinder may warp in contracting.

Celluloid Eyelets, especially for shoes, may be made by taking a tube of celluloid of the required size and having one end flanged, one end being placed in any suitable former, where it is softened by warming, the end being turned over, thus forming the flange. The colors may be varied by grinding in pigments where color and opacity are desired, or by basic dyestuffs where a translucent colored effect is preferred. Tan and black are the colors most in demand and may be produced by the use of bismarck brown or nigrosine dyes, or the siennas and lampblack for pigments.[2] In setting these eyelets, one end is softened, best by the application of a hot tool, the other end being flanged and set down in the goods the same as in metal. When the eyelets have been set, they may be touched on each side at the point of contact with the goods, using a pyroxylin lacquer or celluloid cement, which will at once firmly unite them. A celluloid-covered heel [3] and

1. U.S.P. 667600, 1901; see also U.S.P. 650431, 1900.
2. W. Carpenter, U.S.P. 271035, 1883; see also United Fast Color Eyelet Co., E.P. 2036, 2037, 1902.
3. E. Stoefler, U.S.P. 675451, 1901. The heel was formed by stretching a celluloid tube on a frustrated cone by means of immersion in hot water, then placing this outer shell over a heel body and immersing in water again, when the previously

shoe tip [1] have been patented, and at one time had considerable sale.

Ebony Plastic Masses. Hyatt's original process for the formation of ebony plastics was to mix tannin with the pyroxylin and camphor, then add a wood alcohol solution of ferric chloride, or extract of logwood and an iron salt. This, however, gave a black which appeared somewhat transparent, and lacked that dead or matt opaque appearance of natural ebony wood. The spirit-soluble nigrosines combined with finely divided lamp black are now used, the nigrosine being dissolved in the solvent with the camphor and the black pigment ground with the pyroxylin before conversion. When such a mixture is made into sheets, the highly polished appearance is absent, due to the lampblack. To still heighten the opaque effect, lampblack wetted with acetone or amyl acetate may be sprayed on the sheets just after leaving the rolls, or if the sheets are cut from blocks, as is usually done, the individual cut sheets are lightly sprayed. When thus prepared, the finished sheets have an intense, impenetrable black appearance.

Celluloid Cements and Adhesives used to attach two or more surfaces together may be divided into mechanical and solvent adhesives, heat and pressure being the best known of the mechanical means. A comprehensive definition of a pyroxylin plastic is a nitrocellulose compound which may be welded by heat and pressure alone. The heavy pyroxylin lacquers, aided by the presence of a small amount of camphor or its substitutes, form the class of solvent cements. Any pyroxylin lacquer formula given in Chapter X, which is fairly high in solvent power, makes an excellent celluloid cement when from 10–25% camphor (calculated on the weight of the pyroxylin present) is dissolved in the lacquer. Castor oil, resins, fusel oil, and pigments decrease the adhesiveness when incorporated in celluloid cements. Glue dissolved in glacial acetic acid has been used as a cement, being quite inexpensive. Its efficiency may be improved by the addition of a small amount of pyroxylin to the glue, both being readily soluble in the acid. A little cellulose acetate dissolved in acetic acid and added to glue in solution in the same solvent is said to produce a cement which penetrates sufficiently, but does not soften the celluloid to so great an extent as an acetic acid solution of glue alone.

Celluloid may be cemented to hard rubber by making a mixture composed of alcohol 3, amyl acetate 1, fusel oil 2, camphor ½ (all parts

expanded celluloid would contract and adhere tightly to the core, thus forming a seamless plastic covering.

1. J. Hyatt, U.S.P. 203834, 1878; used considerably when metal shoe tips were in vogue. It had the advantage over copper in lighter weight, over leather in being waterproof, and over rubber in wearing longer.

by weight). Iron and celluloid may be joined by means of acetic acid 1, amyl acetate 5, fusel oil 2 (parts by weight), and to wood by shellac 2, spirits of camphor 3, and alcohol 95%, 4 (all parts by weight).[1]

Celluloid Pens.[2] The Handles Museum [3] is responsible for the statement that in France writing pens are made of celluloid. The outline of the pen is stamped out of a thin sheet, punched, and shaped by placing in a hot press. After being cooled the nibs are formed by splitting and the points may be reinforced as in gold pens by applying a drop of celluloid lacquer and allowing to harden again.

It is customary to insert a goose quill in the corks of india and other inks intended for drawing purposes, the quill enabling the ruling pen to be filled more expeditiously, and with less waste of fluid. Celluloid quills have been used to replace the natural quills, but they have not been found satisfactory. The reason is that india and similar waterproof inks contain borax and ammonia to keep the shellac in solution and also usually a small amount of camphor. This combination has a softening action on celluloid, and it has been found that celluloid quills immersed in this class of inks for some weeks have been entirely dissolved.

Celluloid Penholders. The method of W. Carpenter,[4] designed especially for the production of penholders, is useful for other articles which may be formed by the combined expansion and contraction of a plastic tube. The method of manipulation is shown by Fig. 256, in which the tube, 1, is cut in proper length from tubes made of celluloid, or any plastic material that admits of being softened by heat and has tenacity enough to allow of being stretched and molded. This tube is taken, and one end, *A*, is held in hot water or some other hot liquid until it is pliable; then a mandrel having the desired taper is plunged into the boiling liquid, and thence the end is stuck into soap to lubricate it, when it is pushed into the end of the tube that has been heated, the hand of the operator closing about the end, and holding it while the mandrel by the other hand is pushed into it. This mandrel expands the end *A* to its own shape; but as the other end of the mandrel does not fill the tube at the end *C*, this end has to be reduced to the size of the mandrel.

Fig. 256, 2 shows a tube in the process of forming into a taper.

1. See Towndrow, "Cements for Celluloid," Am. Mach., 1903, **26**, 589; "Glass and Porcelain Cements for Celluloid," Am. Apoth. Ztg., 1897, **18**, 87; "Cementing Celluloid to Wood," Z. Drechsler, 1896, **19**, 449.
2. See Kempshall, Papier Ztg., 1898, **23**, 804.
3. J.S.C.I., 1892, **11**, 1044.
4. U.S.P. 219218, 1879.

The end *A* has been expanded, but the end *C* is not changed. This end, while it is hard, is stuck into soap or other lubricator, and is then pushed into a hole, *E*, in an elastic die, *F*, made usually of rubber; but some other elastic material may answer the same purpose. The tube is pressed into the die up to where the paper had been made by pushing the mandrel into it, or about one-half the length of the tube. The hole in this die is only the size of the small tip of the mandrel, but will stretch to the size of the tube while the tube is cold or hard. Then the mandrel and tube are placed in a vertical position,

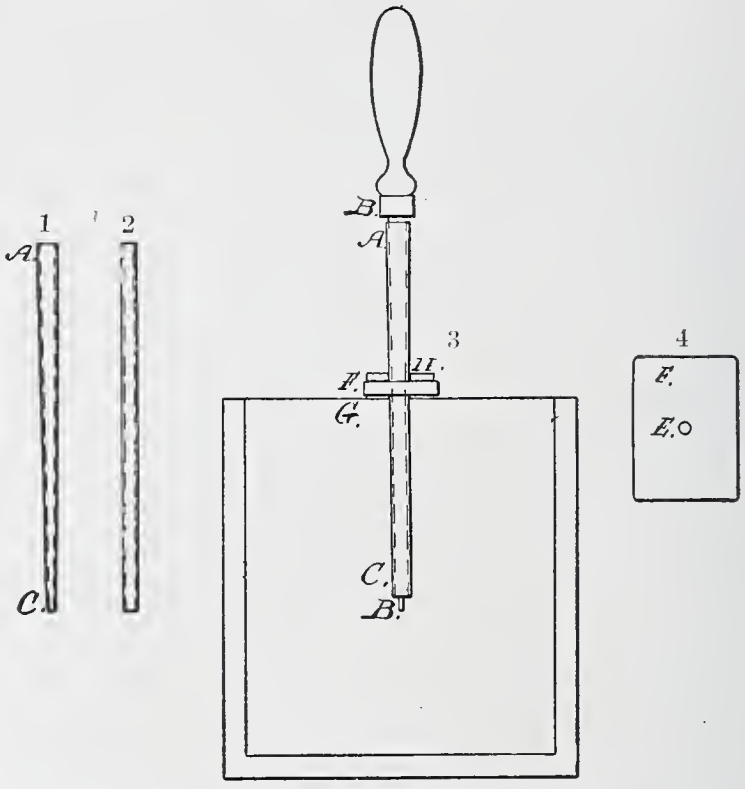

Fig. 256.—Carpenter's Process of Reducing Celluloid Tubes to Taper.

with the lower end up to the die in hot liquid, usually water (see water-line *G*). The die is then caught and held firmly by an abutment or clamp, *H*, and the upper end of the mandrel is connected with a suitable mechanism, by which it is drawn up slowly, carrying the tube that is being molded up with it; and as it is drawn up through the die the contraction, pressing upon the softened celluloid, stretches it lengthwise and closes it about the form of the mandrel.

In pushing the mandrel it sometimes causes wrinkles in the tube; but this process of drawing the lower end of the tube through the die

reduces any wrinkles that have been made above the die, making a smooth, symmetrical taper, as seen in 3.

After the die has been removed the tube is plunged into cold water and cooled. Then it only remains to withdraw the mandrel, and the molded tube or article is ready to be finished for the use for which it was designed.

Thus it will be seen that where the tube is to be enlarged it gets the expansion by the pressure of the mandrel inside; but where it is to be diminished it is brought to a proper shape by the elastic die operating externally, in combination with the mandrel; and in this way many forms may be molded from a plain tube, getting the internal pressure from a solid mandrel and the external pressure from an elastic contracting die, enlarging and contracting the parts as is found desirable.

The process of forming penholders devised by J. Furman[1] has the advantage over the previously described method in that it enables

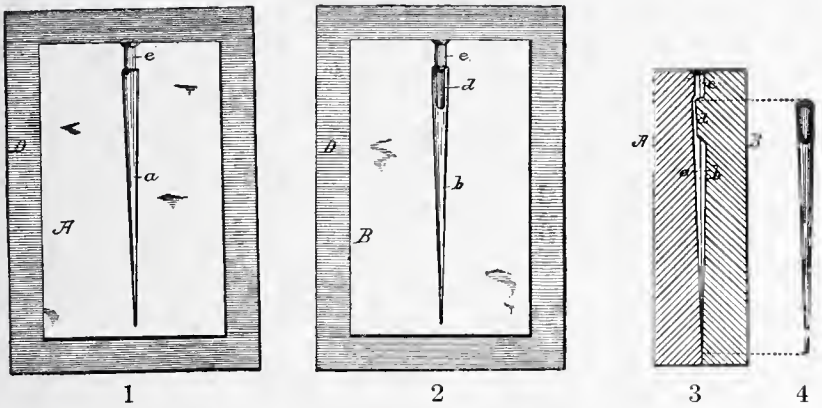

FIG. 257.—Molding Hollow Articles from Celluloid (Furman's Patent).

the formation of a hollow holder having a socket at one end to receive the pen, the whole being produced at one operation and from a single piece of material as shown in Fig. 257. In producing this penholder as shown, a tube of the celluloid or equivalent material is placed in the section *a* of the matrix, and the part of the die containing the section *b* is then brought into position, and comes against the tube of material, at the same time steam being circulated through the blocks *D* for the purpose of heating them and softening or rendering plastic the celluloid. The pressure applied to the opposite sides of the die causes the tube to conform partially to the outline of the matrix, its lower end being solidified, and its upper end depressed on one side by the

1. U.S.P. 282451, 1883.

projection *d* until its side is brought in close relation to the opposite portion. A cooling agent is caused to circulate in the hollow boxes *D*, and steam under pressure is injected through the gate *e* into the softened tube, which has the effect of expanding it closely against the walls of the matrix and of continuing the expansion until the dies have become cooled by the circulation of the cooling agent in the blocks *D*, after which the injection of the steam through the gate *e* is stopped and the article removed from the die. When the tube of material is first placed in the die, its upper end will extend to about the upper edge of the gate *e*. Hence, upon the completion of the article, that portion of the material which lined the walls of the gate will be removed, leaving a finished holder formed of a single piece of material. If, during the operation of the die, a fin of the material is formed on the sides of the article, it is of course removed.

Ink for Writing on Celluloid by the use of a pen or brush as distinguished from printing inks, may be prepared in a number of different ways, of which any one of the following will be found satisfactory.

1. Black. Ferric chloride 10, acetone 50; tannin 12, acetone 50; mix just before use.[1] The acetone dissolves the celluloid and allows the iron tannate to penetrate the pyroxylin. If for use in a fountain pen, acetone will be found to evaporate too rapidly, and may be replaced by a mixture of phenyl acetate and ethyl alcohol. To give the first blue color, as in writing fluids, methylene blue 1.5 part may be added to the above formula. The proportion of phenyl acetate to alcohol may be varied according to the rapidity of drying desired, 40% of the former to 60% alcohol producing a black ink of desirable flow and satisfactory penetration. Simple solution of the spirit-soluble nigrosines 1–2 parts in a mixture of acetone 4, and rectified fusel oil 6, results in the formation of a satisfactory ink, the penetration of which may be assisted by the addition of camphor 2. Black india-ink, which is waterproof, may be prepared by the following method: A fine carbon black is first extracted with benzine or benzene to dissolve the hydrocarbons and fatty matter, ground in a paint mill with twice its weight of equal volumes of castor oil and rectified fusel oil, after which camphor 2, acetone 4 and nigrosine $\frac{1}{4}$ (all parts by weight) are incorporated. To this is added 3 parts wax-free shellac dissolved in fusel oil 1, amyl acetate 2, and wood alcohol 4, the combined mixture well mixed, when the ink is ready for use. Any pen may be used with the liquid, the nigrosine penetrating the pyroxylin while the lampblack, in conjunction with the shellac, produces a heavy

1. See Pharm. Centralh., 1901, **42**, 661; Seifenfabr., 1901, **21**, 745.

glossy black which does not penetrate the plastic, yet is firmly anchored to it by means of the solvents harmonious to both. Colored india-inks, both waterproof and resoluble, may be made by the substitution of carmine or other pigments or lakes for the lampblack and basic dyestuffs soluble in acetone or alcohol for the nigrosine. In addition to carmine for red; Prussian blue for dark blue and ultramarine for light blue; lead chromate or lead iodide for yellow; silver chromate for brick red; copper carbonate, nickel oxalate, chromium oxide, chrome green for green; and zinc, magnesium, or calcium oxides or carbonates for white, are among the suitable pigments which suggest themselves.

2. Red. Eosine or fuchsine for red; rhodamine, phloxine, or peonine for pink; methylene or victoria blue for blue; saffranine for dark red; nile, methyl, ethyl or victoria green; naphthol yellow, auramine or bismarck brown, or rhoduline heliotrope, when dissolved in 10–15 volumes of acetone, 5 volumes of fusel oil added, and the solution filtered if necessary, produce inks which can be applied to celluloid readily with a pen, penetrate deeply and are not readily fugitive to light. By mixing varying quantities of two or more of the above inks, it is evident that a celluloid writing ink of any shade may be duplicated.

"Pastel and water color" pictures on celluloid sheets are obtainable by using inks of the above general formulas, applying the ink with brushes in a manner similar to water-color painting, the finished work being preserved by attaching a thin film over the painting by passing the painted sheet and superimposed film through heated rolls. The inks may be thickened by the addition of glycerol mono-, di-, and tri-acetates, syrupy liquids which are direct pyroxylin solvents.[1]

Printing on Celluloid.[2] Ordinary printing inks with a linseed oil base, do not, as a rule, adhere well to polished celluloid surfaces, partly by reason of its smooth surface, and partly on account of the insolubility of celluloid in the fluid portions of the ink. In the earlier methods[3] the design was applied to the sheet by means of a press, and was then placed on a "steam-table press" with the printed surface of the sheet in contact with a polished plate. From 85–110° heat and about 600 lb. per sq.in. pressure was applied, depending on the thickness of the sheets, only that degree of heat and pressure being required to flow the surface of the sheet and effect a satisfactory

1. Discovery of R. Schüpphaus, U.S.P. 410208, 1889.
2. For "Printing on Textiles with Celluloid Solutions," see Goldsmith, Jour. Soc. Dyers and Col., 1908, **24**, 76. The process is especially applicable for printing "polka dot" on hosiery.
3. M. Lefferts, U.S.P. 346376, 1886.

impression.[1] This process was found to be somewhat expensive and cumbersome, and was improved upon two years later,[2] this being the beginning of engraved plate printing on celluloid. In order to use an ink carrying an insoluble pigment, as in ordinary printing ink, a combination of (*a*) a fluid or mixture which is a solvent of pyroxylin is mixed with (*b*) a pigment in powdered form, and this is held together by (*c*) gums or other binding agent.[3] For plate printing the following proportions are stated to give good results: Any suitable pigment used in printing or engraving inks; binder composed of shellac 20, pyroxylin 1, camphor 40, castor oil 10 (parts by weight); solvent, oil of cassia 2, or fusel oil 2 parts.[4] It is stated

1. If the sheet is thin it will be desirable to back it up with a layer of blotting-paper or other elastic material, for the purpose of preventing or correcting defects, which are likely to be caused by any inequality or irregularity in the plate or sheet. To prevent the sheet from adhering to the backing, a layer of any non-adhesive substance—such as metal, tinfoil, or celluloid—which has been properly oiled or lubricated may be interposed. If desired to impart a finished or calendered surface to both sides of the sheet, a sheet of polished metal is placed in contact with the reverse side of the sheet of celluloid.

In treating thick pieces of material there is danger of the heat and pressure causing the material to flow, whereby the impression will be blurred or distorted. This danger is obviated by performing the operation in a die or receptacle in which the material is so closely and compactly fitted that its shape is preserved, and any displacement of the decorated surface thus prevented. Any die or mold which will prevent a change in the surface that carries the impression is satisfactory.

2. Process of M. Lefferts and J. Stevens, U.S.P. 380654, 1888. The value of this process lies in the ink, oil of cassia high in eugenol being the preferred solvent. This process is a practical example of the value of solvents irrespective of their cost. An engraving was placed on a sheet of celluloid about 10–12 in. and sold as high as $5.00 each. Of Marshall's bust of General Grant, hundreds were sold at this price, the cost of the solvent, in this instance, being of no importance considering the minute amount required to produce a single impression. The first to successfully print on celluloid with type was probably Orvis of New York. His success was apparently due to the dryer in his oil ink, the latter of which dried fairly quickly and did not rub off or blur.

3. The function of the gum and resin is to hold the fine particles of pigment together and thus prevent or retard their being rubbed off. The oxidized portion of kauri and copal is preferred, the character of the binding agent depending in a measure upon the class of printing to be done—as, for instance, in inks for use in plate printing it is preferable to employ gums which will allow the ink to "wipe" smoothly from the polished surface of the plate as shellac; and in inks to be used for type printing a more adhesive gum as mastic, resin, or copal. A small amount of castor oil added tends to render the ink smooth and prevent granulation.

4. In compounding the ink for use in type printing, it is said to be especially desirable that the mixture be of a slowly drying nature, as the ink is spread over a large surface, and the entire quantity applied to the type used up, the large surface upon which the ink is spread permitting rapid evaporation of the volatile ingredients, whereas in inks for use in plate printing, though desirable to use slowly-drying substances, it is not so essential, for the reason that a fresh supply of ink is applied to the plate at each impression taken, the excess of ink being wiped off at each operation. It is also desirable that the ink for use in type printing be of a more adhesive nature to prevent spreading.

The compounding of this ink is best effected by combining the heavy solvents and binding agents at an elevated temperature, after which the lighter solvents may be added, and the mixture then ground with the pigment in the usual manner for making printing-inks.

that after the printed article leaves the press, little or no drying will be found necessary, as the ink rapidly hardens on the material.

In order to increase the penetration of the ink into the plastic surface, the sheets may be taken in the unseasoned or "green" state, just as they come from the sheeting machine. They then contain considerable volatile solvents, and as the surfaces of the sheets have been exposed to but little evaporation to harden them, they are especially impressionable.[1] The desired pattern is then printed upon the unseasoned sheets, the ink penetrating and uniting with the plastic substance. The ink usually permeates to such a depth as to render the printing practically indelible. After seasoning, it is recommended to press the sheets between steam tables at a temperature of 65–85°, and at a pressure of from 1,500–2,000 lb. per sq.in., the heat and pressure serving to incorporate the solid matter of the ink still further into the body of the sheet.

The foregoing methods have made use of the original polished celluloid sheet. If, however, the surface be roughened by providing a fine graining, in a similar manner to that in which lithographic stones are prepared, ordinary printing inks containing especially penetrative and quick-setting driers may be used. Etching by means of a sand blast, spraying glacial acetic acid, mixing the transparent celluloid with pigments as carbonates, before sheeting, and then roughening the surface by superficially dissolving out the carbonates with dilute acids, are methods which have been advocated. Irrespective of the method of graining or deadening used, the sheet may be printed upon direct as in the process of Hazelberg,[2] adding a little ethyl acetate to the printing color if necessary to increase penetration.[3] An exceptionally fine and close grain is said to result when celluloid sheets are prepared by the method of de Coëtlogon,[4] which consists in forming a very fine grain in the shape of a multitude of minute pores, by means of a sand blast of very fine sand. The celluloid dust is removed by brushing, the surface further cleaned by washing with alcohol or water, after which a fatty varnish consisting of white copal, turpentine and oil of lavender is applied lightly. The varnish is rubbed off before hardening, and thus made to penetrate and fill the minute pores. An impalpable powder, as equal weights of magnesium and barium sulphates, is next applied, rubbed

1. J. France, U.S.P. 393753, 1888; E.P. 17691, 1888; abst. J S.C.I., 1889, **8**, 303. Cf. France, U.S.P. 393750, 1888.

2. E.P. 4167, 1892; abst. J.S.C.I., 1893, **12**, 444.

3. If, after the colors have dried, the plate be dipped in a lacquer and polished after hardening, it may be cleaned without danger of effacing the design.

4. U.S.P. 474814, 1892; E.P. 5586, 1891; F.P. 212433, 1891; D.R.P. 61044, 1891; Belg. P. 94383, 1891. Called the "celluchrome" process.

well in, after which the surface is wiped clean and subjected to any well-known satining process. It is claimed that printing upon such a surface is accomplished as satisfactorily as upon paper. In the process as worked out by J. Jarvis [1] the sheets are first embossed, then dipped into a staining solution of dyestuff in alcohol or other pyroxylin non-solvent, the dyestuff penetrating the undulations of the embossed pattern. By polishing off the dyestuff not in the embossing, and then pressing the sheets to an even and smooth texture the embossed patterns, it is claimed, are brought out as a beautiful and permanent design, which before pressing was hardly perceptible.[2]

Printing in Colors. Very beautiful effects in multicolor printing are possible on celluloid sheets, by a process closely resembling the attachment of transfer pictures (metachromatypes). The pictures in inverted succession are first printed in colors on thin, smooth paper, after which the surface is coated with a heavy water-soluble mucilage. The sheets of pictures are then attached to the plastic, firmly pressed in by means of heat as well as force, and the mucilaginous layer softened by water, when the backing may be readily detached, leaving the pictures impressed in the plastic mass. They may be further protected either by placing a thin transparent celluloid sheet over the face by heat and rolling, by varnishing the surface, or simply passing the sheets through heated rolls, to further press the imprint into the pyroxylin base. If bronzes or aluminum in imitation of gold and silver have been used in the printing process, some method of protection is necessary in order to prevent metallic particles from becoming detached. Where the pictures are covered with a celluloid sheet, all tarnishing from exposure to the atmosphere is obviated.

In the Schumacher process,[3] the well-known character of a water-color painting is closely imitated. The different colors are produced in the pictures by washed tints, dissolved in any slowly evaporating celluloid solvent, thickened so that the colors do not run too much. The ink is laid on the surface of as many transfer sheets as there are

1. U.S.P. 417727, 1889. According to the method of F. Meyer, the pattern is printed on paper in the usual manner, using an ink soluble in a solvent of celluloid. The plastic in a thin, transparent sheet is wetted by the mutual solvent, the printed paper pressed against the softened celluloid surface, the ink being transferred to the plastic. By turning the sheet over the print appears positive through the transparency. If difficulty is experienced printing on such a thin sheet a heavier block of celluloid may be used, and after the transfer of the design the sheet may be shaved off.

2. See F. Sommer, "Treatment of Celluloid for Printing Plates," Pap. Z., 1903, (2), **28**, 3042; Laborde and Lorifer, "Weather Proof Celluloid Signs," Erfind., 1903, **30**, 448. "Manufacture of Celluloid Signs," Z. Drechsler, 1903, **26**, 362. For transparent printing on celluloid, see Graph. Mitt., 1903, **22**, 91. "Celluloid Signs," Doerr, Am. Apoth., 1900, **21**, 121, "Printing on Celluloid," Freie K., 1901, **23**, 195.

3. E.P. 3342, 1891.

colors to be printed, these sheets being made preferably of unseasoned celluloid in order to produce that indistinct and blurred effect characteristic of water colors. The several tints are then transferred from this surface (if a number of impressions are to be taken) to an unimpressionable grained celluloid surface, prepared as described in the previous topic. The printing surfaces are next coated with a gum, solution, dried, washed off and rolled up in the usual way with transfer ink. The different colors are finally printed from these prepared surfaces in register to correspond with the colors of the original picture. In the preservation of indelible or waterproof pictures, the process of France [1] may be followed, which consists in simply rolling the picture between two celluloid sheets, very thin and transparent.

Colored designs may be directly transferred to celluloid by means of a combination of heat, pressure, and steam. Any water-soluble pattern, as the cheaper calicoes, may be readily transferred to celluloid [2] by simply pressing the moist calico upon the pyroxylin surface, passing through a steam bath with pressure, whereby the celluloid is softened, the pattern dissolved and transferred and pressed into the moldable substance. The calico must be detached immediately upon leaving the bath and before the plastic hardens, or the cloth will be found firmly imbedded in the latter.

Factitious Lithographic Stone. In the art of lithography, as is well understood, the surface of the stone from which the impressions are to be taken must necessarily possess such an affinity for water that the parts unaffected by the greasy design to be printed will retain enough moisture after a wet sponge or dampening roller is passed over the surface to effectually repel the ink during the inking process and thereby confine it to the design. Ordinary celluloid has been proposed as a suitable base for the production of a design as printed in lithography, but the untreated surface did not give clear-cut designs. J. Stevens [3] has devised a method of treating celluloid surfaces to adapt them to this class of printing, the process being as follows:

The surface of a pyroxylin plastic plate is so changed that it will resemble the Solenhofen lithographic stone in its water-absorbing properties, which is possible by preparing a celluloid containing a large percentage of some water-absorbent, whiting, chalk, terra

1. J. France, E.P. 20964, 1889; Anders and Elliott, E.P. 17012, 1890; abst. J.S.C.I., 1891, **10**, 380.

2. E.P. 9874, 1886; M. Lefferts and J. Hyatt, U.S.P. 348222, 1886; A. Bensinger, U.S.P. 383272, 1888. For producing colored ornamental designs upon pyroxylin plastics see J. Edson, U.S.P. 417727, 1889.

3. U.S.P. 556380, 1896.

alba, barytes, and especially that form of clay commonly used by paper makers as an adulterant and called "paper clay."[1] Best results are obtained by loading the celluloid to the limit with the clay, which is to the point of brittleness, it being found that the maximum of clay is about 200% of the weight of pyroxylin. The celluloid plate is formed of a well-seasoned sheet of this clay-containing plastic, about $\frac{3}{16}$ in. thick ground down perfectly level[2] and attached to an iron base of sufficient strength to impart rigidity to the whole.

The following three solutions are required: (1) gum arabic and water equal parts; (2) potassium sulphide equal parts;[3] castile soap 1, water 6 (all parts by weight). (3) In lithography the two general processes to which the stone is subjected are (1) cutting the design into the surface or engraving, and (2) applying the design in ink to the surface of the stone, which would include crayon, stipple-pen work, and transferring. To prepare the plate for engraving, the surface is polished with a mixture of equal volumes of the above three solutions mixed together. After a contact of about[4] ten minutes, the solution is washed off with warm water, when the surface is ready for engraving, and can be inked and the impressions taken in the usual manner. In case the design prints too heavy or the plate smears easily, it should be treated again with the three mixed solutions containing potassium sulphide, the operator's experience with the natural stone being the best guide.

1. Paper clay is said to be preferable on account of its cheapness, smoothness, freedom from grit, and in addition is an excellent water-repellant in combination with celluloid.

2. The nature of the surface, whether grained or otherwise, is determined, as in the case of ordinary lithographic stones, by the character of the work to be performed.

3. Solution (1) is made by thoroughly mixing the gum arabic with water, allowing to stand over night, and filtering through paper, or more readily straining through cheesecloth. It may be preserved by the addition of a small amount of phenol or passing sulphur dioxide gas through. Sugar, gelatin, glue, tragacanth, egg albumen or mucilage may be used instead of the acacia. No. 2 is prepared by dissolving the sulphide in water, allowing to stand until the sediment has deposited, and decanting the supernatant, light yellow liquid. The strength and purity of the sulphide will modify the amount to be used. No. 3 is made by dissolving the soap, cut in small pieces, in preferably distilled or other soft water. A similar process has been patented by A. Le Roy (U.S.P. 170546, 1887; F.P. 177524, 1886; Belg. P. 74802, 1886; Span. P. dated Nov. 13, 1886; Aus.-Hung. P. dated Nov. 4, 1886.

4. The purpose of using the surface solution is to so affect the celluloid on all that portion of the plate unprotected by the design that it will absorb water and repel ink. This results in rendering the celluloid surface capable of retaining enough moisture when a wet sponge or dampening-roller is passed over the surface to keep the plate from taking ink on those portions of the surface which do not have the design upon them. The proper strength of solution to use on the celluloid surface without destroying the work is rather a matter of judgment with the operater, and it resembles in this respect the nitric acid solution used on the stone in the ordinary process. Sodium sulphide, potassium sulphocyanide, chromic acid or barium peroxide are considered less efficient than potassium sulphide.

In the second class of work, the design is either drawn or transferred upon the surface in the ordinary way, and dusted with powdered asphaltum, talc or other suitable protective powder. The surface is then brushed with the combined solution, but containing less sulphide, as the design is eaten away when the action is too powerful.

Celluloid Printing Blocks.[1] The principal advantages in the reproduction of woodcuts by means of celluloid, are the plasticity of the material when warm and its impressionable surface upon cooling. The first property enables it to penetrate intimately the minute and intricate impressions of the pattern block, and the latter the ability to receive a large number of impressions without seriously interfering with the legibility of the cut. Celluloid cuts are said to be superior to electros on account of the absence of the intervening layer of graphite, and to better stand the pressure in quick-running presses. The method adopted[2] is to press a composition of hot, soft celluloid upon a negative matrix of a harder celluloid composition not so readily softened by heat, the variation in softening of celluloid being due to the nature and proportions of solid solvent present.[3] Pressure is usually applied by placing the sheet in a hydraulic press, when in ten to fifteen minutes' time, the softer celluloid will be found to have been forced into the finest parts of the mold. A celluloid printing block is said to yield from 80,000–150,000 impressions of satisfactory clearness.

Celluloid stamps, while durable, are not sufficiently elastic to compete favorably with rubber. Aniline, cresol and other constituents of rubber stamping inks attack celluloid and rubber alike.

Pyroxylin Labels. Labels intended especially for use upon druggists' or chemists' bottles are often made of glass, and in round or rounded corner bottles, it is necessary to have the glass of an angle corresponding closely to that of the bottle or the label does not fit and soon comes off. In order to obviate these inconveniences, R. Lansing[4] proposes to use celluloid labels prepared as follows: (Fig. 258).

A sheet of transparent celluloid B is placed upon a sheet of glass A, and held by the mucilage C. The marginal lines D and D' indicating the outside and inside size of the label, are filled in between with size,

1. In this connection see Print. Reg., 1880, **20**, 48; Andes, Papier Ztg., 1898, **23**, 692; D. Buchdr. Ztg., 1898, **25**, 91; Z. Drechsler, 1898, **21**, 181. Volkmer, Phot. Corr., 1891, 221; Hansen, Z. Reprod., 1905, **7**, 77; Freie K., 1905, **27**, 211; Beitlich, Zahntech., 1880, **1**, 228.

2. D. Lichtenberg-Madsen, E.P. 25519, 1899; 1934, 1901; J.S.C.I., 1900, **9**, 461.

3. The negative matrix is molded from the original design by pressing homogeneous vulcanite or ebonite, previously softened by heat, upon the original. For description of celluloid printing blocks, see Sommer and Friedrich, Papier Z., 1903 **28**, 3042; also G. Fisher, J. Buchdr., 1903, **70**, 691.

4. U.S.P. 513791, 1894.

gold or foil as shown in the shaded portion of 3. The foil or gold leaf is then varnished over to secure it, the dried sheet cut up into sections of individual labels, a backing of very thin, flexible paper being attached, the latter having first been printed with the desired label. After drying, the label is warmed and attached to the bottle by means of a small amount of pyroxylin lacquer. Bottles containing celluloid solvents are unsuited for a label of this nature on account of liability of the fluid running down the side of the bottle during

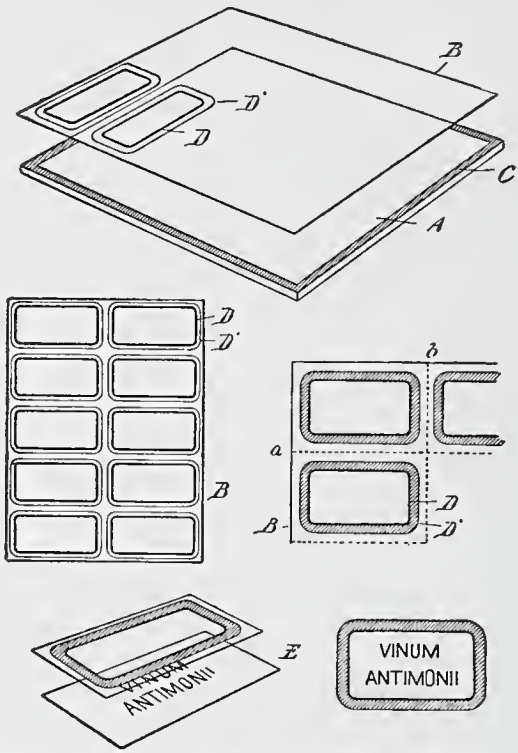

FIG. 258.—Process of Making Pyroxylin Labels, According to Lansing.

pouring out and thus dissolving out the printing or rendering it illegible. The blank is finally trimmed into the desired shape.

Commercial Names of Pyroxylin Plastics. Celluloid, pyralin, viscoloid, xylonith, lithoxyl and fiberloid are the names of the more important pyroxylin plastics produced at present in the United States. Lignoid, a combination of cellulose nitrate and camphor, was produced in the United States at Newburyport, near Boston, Mass., about 1880. Fibrolithoid is another name for xylonite. Coraline, coroline, coralline,[1] is a material composed of shellac, pyroxylin, and camphor, first manu-

1. Described in E.P. 2513, 1875, V. Smith, and E.P. 2073, 1882, T. & W. Nicholls. For description of a substitute for celluloid called "marloid" see Am. Apoth. Z., 1900, **21**, 75; for "boroid" see Electrician 1910, **65**, 533; and "cellulide," F.P. 413152, 1910. For "celloline," of H. Reeser, see Elect. Engineer, 1809, **44**, 308.

factured in the United States, about 1877, by Volney Smith of Schenectady, N. Y., and is an attempt at imitating celluloid. Artificial jewelry was first made by this firm, especially imitation coral, from which fact, it may be inferred, the plastic received its name. Chrolithion, manufactured by the Chrolithion Collar and Cuff Company, of Maine under James Libbey, ceased to exist about 1883, as the result of adverse litigation with the Celluloid Company, in regard to the validity of early pyroxylin plastic collar and cuff patents. Celloidin and photoxylin are purified cellulose nitrates and are not plastic. Collodine, cellodine and collogen are casein and gelatin compounds containing no pyroxylin. Camphorated collodion is the old name for pyroxylin plastics. Sticking plaster, liquid cuticle, ether glue, and fluid skin are names for light-flow collodions. Maisin [1] obtained from corn and various grains by T. Osborne and others has been used in combination with celluloid.[2] Whaleboline [3] is a combination of vegetable fibers and gelatin containing no nitrocellulose. Eburite, vulcanite, and ebonite [4] are rubber- and gelatin-containing products. Artificial rubber products from nitrocellulose and celluloid have been described at length and detail in certain works, but their practical value is *nil*. There has, as yet, been no product produced with pyroxylin alone or in combination, which possesses sufficient extensibility to compete in a satisfactory measure with rubber. While celluloid is elastic and resilient, it does not possess the property of elongation upon stretching. "Solid fiber" is a trade name for a product analogous to celluloid, controlled by the owners of celluloid. Coroline was at one

1. J.S.C.I., 1902, **21**, 1464, 1548; 1903, **22**, 816, 960; 1905, **24**, 853. Extracted from maize by amyl alcohol.

2. L. Desvaux and H. Allaire, F.P. 388097, 1906; First Addition dated May 9, 1908; Second Addition dated Mar. 6, 1909; D.R.P. 207869, 1908; E.P. 9313, 1908; abst. J.S.C.I., 1902, **21**, 1464, 1548; 1903, **22**, 816, 960; 1905, **24**, 853: 1908, **27**, 873, 1082; Chem. Centr., 1903, II, 372. Maisin is a vegetable protein belonging to the amidine group, other members being gliadin, gluten-fibrin, mueedin, zëin, guaneïde, etc. All are soluble in alcohol and a celluloid mixture containing 50 parts of nitrocellulose and 25 parts of camphor may be milled with 50 parts of an amidine previously moistened with alcohol.

3. G. Phelps, U.S.P. 251731, 1881; abst. J.S.C.I., 1882, **1**, 113, for method of preparation. See also Greening, E.P. 8442, 1886, abst. J.S.C.I., 1887, **6**, 549, for method of making artificial whalebone by nitrating cellulose and adding colophony, benzoin and castor oil.

4. Eburite, according to its inventor, P. Justice, E.P. 9665, 1888, may be prepared in the following manner: A mixture is made of 100 parts of paper pulp, containing about 50% of water, with 80 parts of blood. The mass is well kneaded, rapidly dried and powdered. 100 parts of this powder are mixed with 80 parts of blood, 1 part of powdered rosin, and ½ part of linseed or other oil. If a pale-colored product be desired, the serum of blood may be employed and to the mass may be added either casein, white of egg, gelatin, glue, starch, dextrin, or suitable gums. To increase the hardness a small percentage of silicate of soda may be added. The material may be molded into any desired form. It possesses greater hardness than some wood, does not soften under heat, and is not rendered brittle by cold. See also F.P. 364504, 1906; J.S.C.I., 1906, **25**, 906; F.P. 369797, 1906.

time called rose pearl. Pulveroid is paper covered with sheet celluloid intended for indoor signs.

Pergamyn, cellulose-slime, or gelatinous cellulose, is simply ordinary cellulose beaten into fine fibrillæ.[1] This is proven by both the microscopic and chemical examination of the product. It was not found possible to separate the gelatinous cellulose from the sulphite cellulose from which it was prepared. The two materials contain about the same amount of water-soluble matter, but there is less pentosan and methyl-pentosan in pergamyn than in sulphite cellulose. The same sugar (xylose) is obtained from both by hydrolysis with sulphuric acid. The presence of gums in the original material is not essential to the formation of pergamyn. Xyloidins are forms of cellulose nitrate produced by treating cotton with nitric acid alone.[2] Ivoirine is a gelatin zinc-white mass, ivoryine and ivorine being early names for pyroxylin plastic.

Pegamoid[3] is essentially a pyroxylin plastic similar to celluloid and xylonite. The existence of this material commences with E.P. 19710, taken out by F. G. Annison in 1891.[4] Annison, who was a lithographer and printer, was endeavoring to obtain some material to waterproof posters and exterior signs, his claim being "for improvements in the treatment of paper, linen, and other fabrics applicable to the manufacture of show bills, cards, posters and wall decorations." His method was to take strong material, paper or cloth, and apply several coatings of xylonite or ivoryine in solution, and which, when dry, were passed through hot friction rollers to further penetrate the fiber, and produce a smooth and polished surface. If printed matter was to be used on paper, more uniform results were to be had by applying

1. H. Hofman, Papier Ztg., 1906, **31**, 4190. See Chapter I.

2. C. Haeussermann, Z. Ges. Schiess.- u. Sprengstoffwesen, 1906, **1**, 39; Chem. Centr., 1906, **1**, 1196. This substance is produced by treating 10 gm. cotton—with 2 k. of nitric acid (sp.gr. 1.473) at 10-12°; the honey-like mass produced being allowed to stand for twenty-four hours at the ordinary temperature, filtered through gun-cotton and poured into water. The xyloidin which separates is washed free from acid and dried. It forms a white powder with a somewhat greenish tinge, which decomposes at 195° with a slight explosion, but when ignited in the air burns fairly rapidly but quietly. It dissolves gradually in glacial acetic acid, but only swells in acetone and ethyl acetate. The product obtained by treating it with sodium hydrosulphide or ammonium hydrosulphide dissolves while moist almost completely in a 10% solution of sodium hydroxide, but can be reprecipitated from the solution by acids, salts and alcohol; it also exhibits the other characteristic properties of acid cellulose. (See J.S.C.I., 1899, **18**, 940).

3. For additional information see Färber Z., 1904, **40**, 159; Ferenczi, Z. ang. Chem., 1899, 51; Am. Apoth. Z., 1899, **20**, 93; Bottler, "Practical Applications of Pegamoid," Ibid., 1899, **26**, 1; Lefevre, "Technical Applications of Pegamoid," Mon. Text. Ind., 1897, **12**, 677; "Pegamoiding," Sonne, Chem. Tech., 1898, **16**, No. 24; "Applications of Pegamoid in the Textile Industries," Ind. Text., 1898, **14**, 91.

4. U.S.P. 508497, 1893; Reissue No. 11467, 1895.

thin pegamoid sheets to the printed paper surface. Where paper was used, in order to increase the pliability of the coated product, numerous indentations in the shape of parallel straight lines with others crossing at right angles were cut in the obverse side of the coated paper.[1] F. W. Oliver made notable advances in the use of pegamoid, and devised a method of waterproofing paper cartridges and cartridge cases [2] by pegamoiding the paper with pyroxylin plastics, thus cementing two sheets of heavy paper together. Judging from the advertisements in Explosives Journals, the waterproofing of cartridges is an important branch of pegamoid usefulness.

Oliver's next patent [3] was for a pegamoid paint—a heavy bronzing liquid in combination with aluminum,[4] a zinc white enamel for knife handles, brushes and bicycles; [5] waterproofing belting, sole leather, and carding cloths;[6] and for the waterproofing of fabrics. The waterproofing was accomplished in the usual manner—by applying a plurality of semisolid pyroxylin coatings to cloth, and drying between each application. The preparation of "pulverloid" and "crystalloid" signs and posters in the United States is similar to the above, in that a pyroxylin plastic is interposed between the printed paper and the atmosphere, to which the waterproofing effect is essentially due.[7]

"Glorid," used extensively in France as a waterproofing material for umbrellas and parasols, appears to be a pyroxylin plastic similar to the above.

Properties of the Pyroxylin Plastics, including celluloid, pyralin, zylonite, xylonite, ivoryine, coraline, pasbosine, Arlington paste, pyrantin, partsine, fiberloid, viscoloid and the other trade names by which it has been known are somewhat as follows, depending upon the method of formation. Of the numerous definitions of celluloid to be found in the literature, many of them are based on the erroneous supposition that celluloid is mainly used to produce artificial ivory, such, of course, not being the case. A simple and comprehensive definition

1. The English corporation known as Pegamoid Ltd., was floated in 1896 and took over the business of the P. Papers Syndicate, the P. Wall Hangings Syndicate, the P. Leathers Syndicate and the Publishing, Advertising & Trading Syndicate, all Ltd. Later, companies were formed in other countries, the American branch being now out of existence.

2. E.P. 11666, 1894.

3. E.P. 17747, 1894.

4. E.P. 10103, 1896.

5. E.P. 10104, 1896.

6. E.P. 10105, 1896; U.S.P. 578355, 1897; 601927, 602797, 1898; the essential claim as a coating material for the preparation of artificial leather lies in the presence of "camphor or substitute therefor."

7. For development of Pegamoid in U. S. A. see India Rubber World, Jan. 26 and Nov. 1, 1898. This periodical, 1898, p. 31, contains an article by the late P. T. Austen, on pegamoiding banknotes to render them more durable and waterproof.

of celluloid, pyralin, and similar products is: "A combination of the cellulose nitrates with camphor or other body imparting plasticity to the mass."

When properly prepared, celluloid cannot be caused to explode by heat, friction, or percussion. When brought in contact with a flame it burns more rapidly than paper, camphor distills off, much free carbon is evolved, and the residue continues to smolder after being extinguished, the nitrocellulose undergoing incomplete combustion. Celluloid dissolves in warm, moderately concentrated sulphuric acid, but is carbonized by the concentrated acid or by an elevation of temperature. It is readily soluble in acetic acid, more so as the acid becomes concentrated. Apparently an acetic acid solution of celluloid may be kept for some time without decomposition. Nitric acid dissolves celluloid when not too concentrated, but acid of 46° Bé. decomposes, causing the evolution of nitric oxide fumes. Acetone, amyl acetate, methyl and ethyl acetates, the higher ketones, certain deliquescent chlorides in alcohol, and an alcoholic solution of camphor, naphthalin, acetanilid and certain other bodies are capable of dissolving celluloid prepared from low nitrogen-containing pyroxylin. A hot concentrated solution of sodium or potassium hydroxide dissolves celluloid with ease. It is stated that ether dissolves out the camphor from celluloid without taking at the same time any cellulose nitrate. This is true only when ether free from alcohol (a commercially rare product) is used, as small amount as 4% alcohol (this amount being permissible in U.S. Pharmacopœia, VIII, Æther) being sufficient to act as an energetic solvent for the celluloid. Those analytical processes for extracting camphor from celluloid by ether show a wide divergence of results, no doubt justly attributable to the alcohol present in the ether employed. Benzine, benzene, toluene, xylene, and pyridine dissolve the camphor from celluloid without at the same time extracting the cellulose nitrate. When an acetic acid solution of celluloid is diluted with water, both camphor and pyroxylin are precipitated. The ash of celluloid ranges from 0.8% to the amount of pigment incorporated, which may be as high as 60% by weight. Celluloid is usually easily recognized by the slight odor of camphor, more pronounced if the surface be slightly scratched or scraped. Nearly all the commercial celluloid now produced becomes soft, plastic and easily moldable in water under the boiling point. Chloroform, carbon tetrachloride, acetylene tetrachloride, and pentachlorethane all dissolve camphor but not cellulose nitrate. Dichlorhydrin and epichlorhydrin [1] dissolve some forms of celluloid accord-

1. Chem. Zeit., 1904, 28, 213. In experiments with nitrated paper the author

ing to H. Flemming. The specific gravity of celluloid containing no pigments differs according to the ratio of camphor and cellulose nitrate, the degree of seasoning to which it has been subjected, and the degree of pressure or length of mastication in its formation. It will usually come within the range of 1.3–1.5. The tensile strength of celluloid is very great, and approximately equal to that of good wood. If the elastic yielding strength of soft iron be placed at 20,000, and that of wood at about 1,100, that of celluloid reaches about 140–200 per sq.mm. It is a bad conductor of heat and electricity.

A great deal of experimental work has been done on the decomposition of pyroxylin plastics, their liability to ignition and the products of combustion.[1] W. Will [2] has made investigations with celluloid and celluloid articles, as well as with celluloid prepared by himself from stabilized nitrocellulose, for the purpose of determining its liability to ignition and explosion. From the experimental results obtained he has shown that celluloid of good quality is a comparatively insensitive

found that only about 2% was dissolved by hot amyl acetate, while dichlorhydrin dissolved ten times as much. In the latter case a clear solution was readily obtained on warming, but a solution containing 10 gm. of the nitrocellulose in 50 gm. of solvent underwent some decomposition when heated, giving off nitrous fumes and becoming more liquid. The solution could be diluted with alcohol. A similar partial denitrification of celluloid was observed. When finely cut pieces of celluloid were warmed with 100 g.m of dichlorhydrin, solution readily occurred at 130°. When 9 gm. of celluloid were present (temperature 140°) red fumes were evolved, which increased until 27 gm. had been added, and subsequently decreased. As the concentration of the solution increased, the color became darker, but the temperature should be kept below the boiling-point of dichlorhydrin (176°). A concentrated solution (100 gm. in 100 gm.) solidified instantly on the addition of amyl acetate, benzene, or epichlorhydrin, and was readily miscible with linseed oil fatty acids. The addition of alcohol to the solution caused a separation of the celluloid.

1. The more important are included among the following: Kockel, Vierteljahrschrift f. gerichl. Med., 1903, **26**, 1; Pfyl, Z. analyt. Chem., 1907, **46**, 150; Busch, Ber., 1905, **38**, 861; Harcourt, Chem. Soc. Quart. Jour., **15**, 276; Berz. Jahrsb., 1861, 169; Schaffer, Dissertation, Munich, 1906; Beck, Arbeiten a. d. Kaiserlichen Gesundheitsamte, 1909, (1) **30**, 70; Celluloid Industrie, 1901, **3**, 10; Supplement to G. Z., 1901, **11**, 16. For solubility of celluloid in epichlorhydrin, see Flemming, Chem. Ztg., 1904, **28**, 213; Pharm. Centralh., 1904, **45**, 749.

2. Z. ang. Chem., 1906, **20**, 1377. Will has shown (Z. ang. Chem., 1906, **20**, 32) the variability in compositions of celluloid by the following five analyses:

	I	II	III	IV	V
Nitrocellulose.....	64.89	73.70	71.48	73.80	71.80
Camphor.....	32.86	22.79	27.31	24.30	27.00
Other material.....	2.25	3.51	1.21	1.90	1.50

He determined the velocity of combustion of strips of powder, celluloid and paper under similar conditions and obtained the results 1:2:10. The complete combustion of celluloid developed 3900–4600 calories, which is not far from that of brown coal (4000 cal.) or air-dried pine wood (4500 cal.) However, the quantity of heat developed in a given unit of time in the former case in consequence of the five-fold greater velocity of combustion is much greater.

substance. Shocks, blows, friction, electric sparks, or heating to 100° neither ignite it nor cause it to explode. Some samples, however, ignite or explode at such low temperatures as may readily obtain in the neighborhood of electric arc light lamps, or other sources of heat. This defectiveness may be due to either the use of unstable nitrocellulose in making the celluloid, or to the employment of too high a temperature in molding or pressing it into the desired shape. The author suggests that it may be necesary in order to insure the production of stable articles to adopt in the celluloid industry the precautionary methods prevailing in the manufacture of nitroexplosives. Celluloid which is liable to decomposition at a comparatively low temperature may be detected by the following test: 0.1 gm. in small pieces is placed in a lightly corked test tube and immersed in an oil bath previously heated to 100°. The temperature of the bath is kept uniform by means of a stirrer and is raised steadily at the rate of 5° per minute. The point at which the sample fumes off is observed. Samples that do not fume off below 160° when so tested may in the author's opinion be regarded as satisfactory. Some decomposed as low as 4°. Compact celluloid burns without explosion, but celluloid dust can be ignited by powerful electric sparks, and can explode when ignited. The explosions which sometimes occur during fires in which celluloid goods are involved are most probably due to the gases given off by the burning material. Thus the author finds that when celluloid is heated in absence of air or with an insufficient supply of air the gases evolved are rich in CO, CH_4 and H and when mixed with widely varying proportions of air, or with an insufficient supply of air, form explosive mixtures; burned with insufficient air, celluloid also evolves much NO and a little HCN. In fire extinguishing operations the presence of these three poisonous gases must not be lost sight of.

J. Brohn [1] has recorded researches made by F. Gervais in the laboratory of the Ministry of Finance, in St. Petersburg. Gervais' conclusions are as follows: (1) Celluloid wares, remaining in contact with heat at 100° decompose spontaneously. (2) This decomposition is accompanied by evolution of heat, which may raise the temperature much above the original source of heat, but will not cause ignition of the goods. (3) The temperature may, however, raise high enough to cause the packing paper to smoulder, and in the presence of air, to take fire. (4) Celluloid goods inflame only when brought in

1. Z. ang. Chem., 1905, **19**, 1976. For the celluloid substitute of E. Rouxeville see U.S.P. 881827, 1908; F.P. 376269, 1906; E.P. 13023, 1907; abst. J.S.C.I., 1907, **26**, 988. For "Spontaneous Ignition of Celluloid Goods," see Obst, Z. Dreschler, 1905, **28**, 127.

contact with a vigorously burning body. Smoldering wood, or a red-hot wire or glass rod, will not inflame them. In the course of the research, the ignition temperature of various celluloid articles was determined at from 355–457°.

An elaborate 34 page monograph on the products of the explosion and decomposition of celluloid has been published [1] by B. Pfyl and P. Rasenack, in which they call attention to the fact that the fires in celluloid factories within the past few years have in nearly all instances resulted in poisoning by the fire gases. The authors consider that the chief sources of danger are the products of explosion of celluloid formed at a relatively low temperature. Two series of experiments were carried out. In the first, celluloid was heated until explosion (i.e., sudden evolution of gas) took place, in a tube filled with carbon dioxide, nitrogen, or air at atmospheric pressure, or in a vacuum over mercury; while in the second the celluloid was burned with, as far as possible, avoidance of explosion. The products of explosion of celluloid, with exclusion of air, consisted chiefly of carbon dioxide and monoxide, nitrogen, nitric oxide, hydrogen cyanide, acrolein, and camphor; oxides of nitrogen other than nitric oxide were not formed nor were hydrocarbons and hydrogen. 100 gm. of celluloid yielded 17–18 l. of gas, stable at the ordinary temperature, and consisting of 4–7 l. of carbon monoxide, 7–9 l. of nitric oxide, 3–4 l. of carbon dioxide, and 0.5 l. of nitrogen. 100 gm. of celluloid yielded 0.7 gm. of hydrogen cyanide, excluding a small quantity fixed by the acrolein. By explosion of celluloid in presence of air, nitrogen peroxide was formed in place of nitric oxide, and this reacted with the acrolein to form strongly reducing compounds, probably hydroxylamine derivatives. In presence of a sufficient quantity of air, and with small quantities of celluloid, the products of explosion were identical with those of complete combustion (carbon dioxide, water, and nitrogen); no hydrogen cyanide or carbon monoxide was produced on burning 1.2 gm. of celluloid. On burning celluloid with a restricted supply of air, larger quantities of hydrogen cyanide were produced than in the explosion of celluloid, 100 gm. of celluloid yielding about 1.2 gm. of hydrogen cyanide.[2]

In studying the flameless decomposition of celluloid A. Panzer [3] heated the plastic by an electrically heated wire touching its surface, in a vessel from which the air had been removed, till decomposition

1. Arbeiten a. d. Kaiserlichen Gesundheitsamte, 1909, **32**, 1; abst. Chem. Centr., 1909, II, 763. See Voight, "Stability of Celluloid," Z. ang. Chem., 1905, 18, 2002.

2. For hydrogen cyanide as a product of celluloid combustion, see Koehel, Viertelj., ger. Med., 1903, **26**, 1.

3. Z. ang. Chem., 1909, **24**, 229, 1831; abst. J.S.C.I., 1909, **28**, 1001, 1061. For solubility of celluloid in acetone see Med. Wschr., **54**, 2039.

set in. The current was then switched off, the decomposition allowed to continue, and the products were examined. It was found that 24.8% of the weight of the celluloid was obtained as gaseous products, and 16.8% remained behind as charcoal or coke; the remaining 58.4% of liquid and solid products of distillation could be only partially collected, owing to the difficulty of condensing them. The charcoal was found to be, or to become when very gently heated, pyrophoric. The fires which have from time to time arisen in celluloid factories have very probably been caused by decomposition of the celluloid, followed by ignition of this pyrophoric charcoal. The gases consisted of (by volume) nitric oxide, 51.1%; nitrous oxide, 5.5%; carbon dioxide, 6.8%; carbon monoxide, 30.9%; hydrogen, 0.9%; nitrogen, 4.8%. The liquid products consisted very largely of camphor and nitric acid, very probably the whole of the camphor contained in the celluloid passing over as Kachler's camphor nitrate, $2C_{10}H_{16}O.N_2O_5$. Possibly the explosions which have occurred during celluloid factory fires are caused by this substance or the products of its decomposition by heat. Further investigation is, however, necessary.[1]

Celluloid Substitute[2] **according to J. Thornton and C. Seymour,** consists essentially[3] of a process for manufacturing a transparent substance by dissolving the aluminum salts of fatty acids with a suitable volatile solvent—such as benzol, coal-tar, naphtha, benzolin, or other similar light hydrocarbon—and drying or solidifying in the presence of heated air.

In carrying out the invention the aluminum salt of one or more of the fatty acids in powdered form is taken and treated with a volatile solvent until the material assumes the consistency of a heavy plastic mass. It is advantageous to mix two or more fatty-acid salts and also to add an aluminum salt of resin acids, and for this purpose employ aluminum oleate, aluminum stearate, and aluminum resinate. The following formula may be taken as an example of suitable proportions of the materials: aluminum oleate, 6 parts; aluminum stearate, 4 parts; aluminum resinate, 1 part; benzol, 100 parts. The mate-

1. The heavy smoke contains combustible gases which form explosive mixtures with air, and are the cause of the dreaded explosive flame (*stichflamme*) in fires. It is this which prevents the firemen from entering a room where the flameless decomposition is taking place, and compels them to restrict their activity to extinguishing surrounding objects set on fire by the flame. The carbonaceous residue must be regarded as a decomposition product of the nitrocellulose of the celluloid. Celluloid dust is not explosive even in oxygen, and the specific phenomenon of the burning of celluloid must be attributed to its flameless decomposition. See also Panzer, Z. ang. Chem., 1910, **23**, 1080.

2. For general article on celluloid substitutes, see India Rubber, 1899, **17**, 83.

3. U.S.P. 654688, 1900. For "Improvement of Celluloid by Addition of Resins," see J. Zahnheilk., 1900, **15**, 188.

rials are well mixed in a kneading-machine until a homogeneous viscous mass is obtained. The mixing may be done cold or at the ordinary temperature; but it is preferably and more rapidly effected at a temperature of from 30–50°. The material in the viscous state is then spread out into thin sheets or films, molded into blocks or other form, or rolled into sheets. For the production of flexible transparent films, such as employed for photographic purposes, the viscous mass is flowed or spread out onto flat slabs or tables of glass, sufficient of the volatile solvent having been added to reduce it to the desired consistency to spread itself into a very thin film.

For the manufacture of molded blocks or slabs or for the production of thin sheets or films by rolling out the material the same quantity of the aluminum salts may be used with a less quantity of the solvent, using only sufficient of the latter to enable the powdered salts to be blended in the kneading-machine. The proportion of the solvent may be from 20–25 parts by weight, the quantity being as small as practicable to reduce so far as possible contraction during drying. After the spreading of the compound thus formed it is dried at a temperature of from 40–55° in a current of warm air, to carry off the volatile solvent. For treating fabric or paper to render it waterproof the viscous mass may be applied by means of a spreading-machine, or the compound may be reduced to a liquid state by the addition of a greater proportion of the solvent and applied by a roller. A harder and less flexible material may be made by increasing the proportion of the resinate or stearate of aluminum or by the substitution of palmitate of aluminum for the stearate. The molded blocks may be further pressed into any desired form or shape by means of suitable dies, or the material may be cut, turned, or otherwise manipulated when solid.

In the preparation of this compound it is preferred to use the salts of oleic, stearic, or palmitic acid, to which may be added a small quantity of the salts of resin acid. This substance is cheaper to produce than celluloid, will not ignite on heating, does not expand, contract, or cockle when placed in water and dried, may be made flexible or brittle, as desired, and is a non-conductor of electricity applicable for insulating purposes.

Celluloid Substitute of H. Assadas[1] is prepared by charging two covered stoneware pots with pure paper cellulose contained in a "basket" of acid-resisting material. A charge of mixed nitric and sulphuric acid is then run into one pot and nitration proceeds, with exclusion of light and air, at the temperature of a water bath in

1. F.P. 387537, 1907.

which the pots are immersed. This pot is then raised by a pulley and connected by means of a pipe with a funnel in the lid of the other; the spent acid is tapped off into the second pot, into which a fresh charge of acid is run through the funnel. The two pots are then disconnected. The nitrated cellulose is emptied from the first pot into cold water, a fresh charge of cellulose put in, and the nitrating operation repeated, the position of the pots being reversed. The nitrocellulose is washed, dried, and mixed under pressure in a steam- or water-jacketed autoclave, by using appropriate solvents in desired proportions with either: (*a*) hypophosphorous acid alone or combined with baryta, and the sulphide, sulphite, sulphhydrate, or thiocyanate of aluminum, potassium, etc.: or (*b*), phosphoric acid with a small quantity of ammonium or barium carbonate, aluminum thiocyanate, and castor oil. To either of these, resin, instead of camphor, may be added. Suitable proportions of the above are given. If resin be added it is desirable to use a little more castor oil, or other fatty body, or a liquid hydrocarbon. The colorless pasty material so obtained may be worked up into the forms of threads, etc., by means of a suitable press.

Formaldehyde-Phenol Celluloid Substitutes, Bakelite and Resinit. The early history of the reaction of phenols and aldehydes was of theoretical rather than of commercial interest.[1] In

1. A. Bayer (Ber., 1872, **5**, 1095; 1886, **19**, 3004, 3009; 1892, **25**, 3477; 1894, **27**, 2411) first described the reaction of phenols and aldehydes. With the advent of cheap commercial formaldehyde, Kleeberg (Ann., 1891, **263**, 283) took up the subject and prepared masses with formaldehyde and phenol in conjunction with strong HCl, but they were uncrystallizable. Arthur Smith (E.P. 16247, 1899) endeavored to obtain a moldable compound by modifying the energy of the reaction by the introduction of a non-reacting diluent, methyl or amyl alcohols, subsequently claimed (D.R.P. 112685, 1899) as assisting in the reaction. A. Luft (U.S.P. 735278, 1903; D.R.P. 140552, 1902) incorporated both glycerol and camphor in attempts to obtain a plasticity equal to that of celluloid. Higher phenol-alcohols, i.e., saligenin, if heated alone or with acids, give partial anhydrides such as saliretin (Beilstein, Organ. Chem., 1896, **2**, 1109) and homosaliretin (R. Piria, Ann., 1843, **48**, 75; 1845, **56**, 37; 1852, **81**, 245; 1855, **96**, 357; Moitessier, Jahrsb., 1886, 676) which are both higher anhydrides of similar character. The first results by the action of sulphuric acid on saligenin, the latter by the action of acetic anhydride. For methylsaliretin (homosaliretin) see C. Schotten (Ber., 1878, **11**, 784); trisaligenosaligenin (K. Kraut, Ann., 1870, **156**, 123; Gerhardt, Ann. Chim. Phys., 1843, (3), **7**, 215); heptasaligenosaligenin (Beilstein and F. Seelheim, Ann., 1861, **117**, 83). A. Speyer (D.R.P. 99570, 1897) produces an antiseptic which gives off formaldehyde. He treats naphthalin, resorcin or pyrogallol with formaldehyde and ammonia, producing an insoluble powder which readily liberates CH_2O and NH_3. See hexamethylenetetramin (Wohl, Ber., 1886. **19**, 1892; Tollens, Ber., 1884, **17**, 653; Moschatos and Tollens, Ann., 1893, **272**, 280). F. Bayer & Co. (D.R.P. 201261, 1907) use *o*-cresol to produce an odorless shellac substitute, while L. Grognot (U.S.P. 891436, 1908) adds glycerol in the reaction mass, and subsequently distills it off. Knoll & Co. (E.P. 28009, 1907; Swiss P. 40994, 1907) use sodium sulphite as the condensing agent, and (D.R.P. 222453, 1908, Addition to D.R.P. 214194, 1908; F.P. 397051, 1908; U.S.P. 965823, 1910; abst. J.S.C.I., 1909, **28**, 803) hastens the hardening of condensation of products of phenols and aldehydes by diluting the

1902 [1] L. Blumer boiled formaldehyde, phenols and an oxyacid (preferably tartaric), obtaining a fusible, alcohol-soluble resinous material, which he proposed as a shellac substitute. The next year E. Fayolle [2] introduced glycerol with the sulphuric acid used as the condensing agent, and thereby obtained a plastic product, but one in which the glycerol could be dissolved out by hot water. In order to imitate gutta percha,[3] pitch and oil were added, but the final product lacked resiliency.

In 1905 W. H. Story [4] received patent protection for a process for making a substitute for celluloid, ebonite and horn, in which commercial phenol (50 parts) or an equivalent quantity of another phenol is boiled with 40% formaldehyde solution (30 parts), for about eight hours in a vessel provided with a reflux condenser. The product is then rapidly concentrated at a temperature somewhat above 100°, and poured into molds, when it hardens on cooling, and forms a transparent mass. If an opaque product is desired, a small quantity of a metallic salt or a fatty oil may be added; the product may also be colored by the addition of a suitable dyestuff. While the substance is still viscous, it may be dissolved in an organic solvent, the solutions serving as varnishes. When it has hardened it is stated to be insoluble in all solvents, and not attacked by alkalies or acids, excepting fuming nitric acid. Story gave to his product the name "resinit," as a soluble synthetic resin, which however, became plastic and moldable upon the application of heat.

The soluble and fusible resins of de Laire [5] result from dissolving phenol in caustic alkalis in molecular proportions or condensing phenols with aldehydes in the presence of acids, in a manner similar to that previously described by L. Lederer [6] and Manasse.[7]

In 1909 [8] L. Bakeland described methods of condensing phenols

acids employed with such substances as are miscible with the condensation products, such as ethyl alcohol or glycerol. L. Sarason (D.R.P. 219570, 1908) produces condensation products of formaldehyde and phenols by acting with sulphur dioxide on a mixture of formaldehyde and isolated phenols. The reaction proceeds much more quietly than with HCl and H_2SO_4; the reaction products are considerably clearer and readily soluble in caustic alkalis and most of the volatile solvents.

For formaldehyde-albumin substitutes, see W. Stadler, D.R.P. 220493, 1909.

1. E.P. 12880, 1902.

2. F.P. 335584, 1903; First Addition thereto No. 2414, dated Feb. 8, 1904; Second Addition thereto No. 2485, dated Feb. 18, 1904.

3. F.P. 341013, 1904.

4. E.P. 8875, 1905; F.P. 345398, 1904, abst. J.S.C.I., 1904, **23**, 1233; F.P. 353995, 1905; D.R.P. 173990, 1905; Belg. P. 210965, 1908.

5. F.P. 361539, 1905; E.P. 15517, 1905; D.R.P. 189262, 1905.

6. Jour. prakt. Chem., 1898, **50**, 224.

7. Ber., 1894, **27**, 2409; U.S.P. 526786, 1894. See also Bayer & Co., D. R.P. 85588, 1896.

8. Bakeland, Jour. Ind. Eng. Chem., 1909, **1**, 149–161; 1910, **2**, 478, 494; Trans-

with formaldehyde, in which two entirely different classes of resinous products result, depending on the conditions and proportions of the reacting bodies. The first class is soluble in alcohol, acetone, or similar solvents, and in alkaline hydroxides. Upon heating, they melt and solidify upon cooling, apparently without undergoing change. The second class, formed by continued heating, is generally infusible and insoluble substances, although by modifications of the process, the plasticity and solubility may be varied within comparatively wide limits. The infusible modifications—to which the name Bakelite has been given—may be produced directly in one operation by the interaction of formaldehyde and phenols, or may be produced in two phases in which the incomplete reaction gives viscous products soluble in alcohols, glycerol, camphor or phenol, which upon further heating or elimination of solvent gradually changes into the final or insoluble product. There is a final drying treatment in which the solvent is driven off, and the transformation into insoluble modification completed. Chemically, the typical condition of formation of Bakelite may be considered to result in the formation of polymerized oxybenzyl-methyleneglycol anhydride. Its various industrial applications—which have been covered by patent protection[1]—are along the lines of electrical insulation,[2] manufacture of imitation amber articles

Am. Electrochem. Soc., 1909, **15**, 593; Electrochem. Met. Ind., 1909, p. 111; Jour. Frank. Inst., 1910, **168**, 55. For polemical between Resinit and Bakelite, see H. Lebach (Resinit) Z. ang. Chem., 1909, **22**, 1598; Bakeland, ibid., 1909, **22**, 2006. See Weekly Consular and Trade Report, May 7, 1910, p. 447, and Sept. 1, 1910, p. 668, for consular reports on Resinit.

1. Bakeland, U.S.P. 939966, 941605, 942699, 942700, 942808, 942809, 942852, 949671, 954666, 957137, 1910; E.P. 21566, 1908; abst. J.S.C.I., 1909, **28**, 374; F.P. 386627, 386628, 1908; First Addition thereto dated Jan. 22, 1909; abst. J.S.C.I., 1908, **27**, 686. Jap.P. 16247, 18600; Mex.P. 8179.

2. Coils can be impregnated with the liquid material, and then submitted to hardening by the application of heat and pressure, so as to imbed the wires of the coils in a hard, infusible, insulating mass.

The specific electric resistance, dielectric strength, mechanical strength, maximum working temperature, etc., of Bakelite vary considerably according to the nature of the compound. For instance, compounds with asbestos will stand considerably higher temperatures than those made with wood fiber. The latter are more adapted to turning, sawing and all purposes where great toughness is required Bakelite compounds containing asbestos withstand very well high-pressure steam even if the latter be at a temperature of 200°. Pure Bakelite electrizes by friction, which denotes high dielectric properties.

Asbestos-Bakelite insulators do not show such high dielectric constants, but are very well adapted for voltages not exceeding say 40,000 volts. They have the considerable advantage over shellac or rubber insulators that they do not soften by heat and are considerably stronger.

Bakelite compounded with wood pulp shows higher dielectric strength on account of the fact that wood pulp does not contain disturbing materials, like iron, which is always present in asbestos. On the other hand, such wood fiber Bakelite insulators cannot well be used where the insulators are submitted for long periods to temperatures above 150°, but they resist water and steam, oil and solvents.

in which it comes in direct competition with the pyroxylin plastics, and as a covering to resist the action of chemicals and solvents.[1] One of the intermediate forms of Bakelite is liquid, and is stated to be suitable as a wood-impregnating medium [2] or as a lacquer.[3]

Formol-Albumen Celluloid. The Société Anonyme l'Oyonnaxienne has utilized commercially the property of formaldehyde to coagulate albumen in the formation of plastic bodies. Either egg or blood albumen moist or dry, is brought into contact with formol, either in aqueous solution, or by means of the vapor in closed receptacles. After the formol has thoroughly penetrated the albumen, the insoluble mass is filtered, washed free from aldehyde and dried at a temperature below 40°. Thus obtained the product appears as a transparent, corneous and structureless substance, which loses its transparency and becomes opaque on pulverizing.

Before use the formol-albumen is reduced to a fine uniform powder, and thoroughly sifted to render it homogeneous. The product is then mixed with water or alcohol by being ground between edge runners, and while moist is added to pyroxylin and camphor ground together in the usual method of celluloid formation. When the three ingredients have been ground until indistinguishable by the naked eye, the mass is placed in air-tight containers, alcohol sprinkled over, and the usual conversion of pyroxylin into plastic carried out. The quantity of formol-albumen which may be added with safety is variable, being diminished according to the quantity of camphor.

Streubel's Vegetalin. Cellulose is first immersed in sulphuric acid of 58–62° Bé. until entirely disintegrated, the mass being kept at 20° or lower. It is next centrifuged, washed with water to neutrality, dried and intimately mixed with a resin soap and an aqueous solution of aluminum sulphate. The mixture of hydrocellulose and aluminum resinate is thoroughly milled, dried, and pressed into blocks and other forms hydraulically. By softening with water, the

1. In its final stage it is hard, infusible, and insoluble; it then resists all solvents and almost all chemicals; it stands temperatures as high as 300° or over; at the temperature of melting glass, it is destroyed and chars, without entering into fusion; it is charred by boiling concentrated sulphuric acid and by nitric acid; it is also attacked by bromine, but it stands very well chlorine and hydrochloric acid and cold sulphuric acid; boiling dilute sulphuric acid has no effect on it. Certain varieties can be made to stand hot caustic acid solutions.

Mixed with mineral substances like asbestos, its resistance to heat is considerably increased. In unmixed condition, it may appear as a perfectly transparent amber-colored substance, which is much stronger and more resistant than amber and can be turned and polished to a high finish.

2. The liquid modification is used, which is afterward made insoluble by heat and pressure.

3. As an acid-resisting lacquer and lining for chemical pumps and other apparatus.

mass may be remolded or when thoroughly dry can be sawed or turned as wood. In properties it strongly resembles the zinc chloride-cellulose products.

A. Chanard's Celluloid Substitute [1] is prepared by treating amylaceous substances with acetic acid and adding the product to a mixture of gelatin dissolved in water and resin dissolved in alcohol. The whole is then treated with formaldehyde. For instance, 100 k. of crushed haricot beans are immersed for eight days in a 2% solution of acetic acid. The mass is then drained, pounded, and passed through a sieve. This paste is now added to a mixture consisting of 5 k. of gelatin dissolved in 20 l. of hot water and 20 k. of rosin dissolved in 10 l. of turpentine. A small quantity of a suitable antiseptic may also be added. The product obtained is cast into molds while still hot, and after about eight days the molded shapes or objects are immersed in a 10% solution of formaldehyde for from thirty minutes to two hours. Coloring matters, etc., may be added to the starchy mass. The plastic material obtained is non-inflammable and may be used as a substitute for celluloid, ebonite, etc. According to J. Stocker and F. Lehmann [2] products resembling celluloid are obtained by heating together agar-agar or similar gelatinous substance, casein, a wax, and castor oil or poppy-seed oil. The agar-agar is dissolved in water, an alkaline solution of casein added, the greater part of the water evaporated, and the other components incorporated with the hot mixture.

R. Ortmann's Celluloid [3] is prepared by taking pyroxylin 1 k., mixed with 0.065 l. turpentine, 0.25 l. ether, to which 0.5–0.7 l. methyl alcohol is then added and the mixture allowed to remain for twelve hours before being milled between hot rolls. Venice turpentine and acetone are said to yield the best results, although any turpentine or ketone may be used.

Imitation Celluloid according to C. Hellriegel, [4] consists, instead of making articles entirely of celluloid, in using a foundation of paper, pasteboard or similar material as required, which is then coated with a thin layer of pyroxylin in a centrifugal. It is then placed in a machine of special design and first hot and then cold pressed in molds, the working table rotating around a vertical axis in such a manner that the action of the press is continuous.

1. E.P. 28598, 1909; the Soc. industrielle de Cellulose (D.R.P. 14310, 1902; F.P. 319542, 1902) mix pyroxylin 100, amyl acetate 60, camphor 50, with dextrin 100 (all parts by weight) which has previously been heated with water to 70–80°, the water evaporated off, and mixed with the pyroxylin above.
2. D.R.P. 202133, 1907; and First Addition, D.R.P. 222319, 1907; abst. J.S.C.I., 1908, **27**, 1174.
3. E.P. 5280, 1904; F.P. 343464, 1904; abst. J.S.C.I., 1904, **23**, 948.
4. E.P. 22186, 1899.

"Improved" Celluloid of Tissier & Magnier[1] consists of mixing with celluloid produced in the usual way, about 25% "crystallizable" gelatin dissolved in 60% alcohol with 5–10% acetic acid. The celluloid substitute of J. Stocker and F. Lehmann,[2] is a preparation of seaweed with various oils and waxes and contains no cellulose nitrate.

Casein Plastics. A number of combinations of casein with other materials has been patented and their uses described, as witnessed by the processes of J. and W. Thiem as far back as 1869,[3] and J. Frauenberger,[4] J. Steffens,[5] E. Childs,[6] R. Mestaniz,[7] C. Jung,[8] W. Hall,[9] W. Krische and A. Spitteler,[10] P. Hensen,[11] and others[12] who

1. F.P. 320931, 1902. The swollen gelatin is added together with celluloid paste (nitrocellulose and camphor) to 90% alcohol containing a little acetone. The mixture is warmed and kneaded hot in the ordinary way. The incorporation is best performed in a closed autoclave provided with a stirrer, and in this case the alcohol and acetic acid can be recovered by distillation. See also E.P. 15355, 1899; F.P. 319926, 1902.

2. D.R.P. 202133, 1907; the process of F. Kohl (D.R.P. 114278, 1901) is similar.

3. U.S.P. 86710, 1869.

4. U.S.P. 163939, 1874; 182431, 1876.

5. U.S.P. 307179, 307269, 1884.

6. U.S.P. 169053, 1875.

7. U.S.P. 353697, 1886.

8. U.S.P. 662444, 1900; see also H. Dunham, U.S.P. 717085, 1902; 748709, 1904.

9. U.S.P. 632408, 1899; 649690, 664318, 1900; 758064, 1904.

10. U.S.P. 646844, 1900; D.R.P. 127942, 1902; Spitteler, D.R.P. 115681, 1899.

11. U.S.P. 610626, 1898. See Rouland, "Celluloid and Casein," Rev. ind., 1906, 37, 350.

12. H. Cathelineau and A. Fleury (F.P. 354942, 1905, and First Addition thereto dated June 5, 1905) prepare a plastic which can be cut into sheets, strips or plates, by treating casein with a phenol (as carbolic acid and thymol) in which is dissolved camphor and cellulose. F. Cantu, G. Miglioretti and G. Maffei (E.P. 1160, 1901), coat fabrics with casein solutions which are afterward rendered insoluble by exposure to formalin vapor. B. Goldsmith (U.S.P. 615446, 1898) finishes articles having absorbent surfaces by first applying a coat or coats of an aqueous casein solution, and then superposing one or more pyroxylin coats. The Casein Co. (E.P. 23752, 1903) describe processes of combining casein and nitrocellulose by means of glacial acetic acid, camphor being added in small amounts. F. Lebreil and R. Desgeorge (F.P. 408592, 1909) obtain a pliable product from casein by treating it in an autoclave at a high temperature with acetone and its homologues, the quality of the product being modified by treatment with nitric acid or benzene. The Compagnie Franc. du Celluloid combines casein 100, alcohol 50 and urea acetate 5. After the mass has swelled for forty-eight hours, it becomes thoroughly penetrated and is then incorporated with nitrocellulose. W. Stadler (D.R.P. 220493, 1909) adds aromatic hydroxy-compounds or their derivatives to solutions of albuminoids containing formaldehyde. For instance, a satisfactory product is said to result from heating 80 parts of a 35% solution of protalbin with 10 parts β-naphthol to 30-40° for twenty-four hours. By this process clear solutions of albumin are obtained, suitable for lacquers and celluloid substitutes. See also H. Heydenhauss, A. Banhegyi and K. Glaser, F.P. 406139, 1909; U.S.P. 950352, 1910; O. Schönfeld, D.R.P. 85886, 1896; E. Schering, D.R.P. 107637, 1899; Gummiwaaren Fab. Harburg-Wien, D.R.P. 115681, 1901; 141309, 1903; 147994, 1903; their product being called "Galalith." This is artificial horn prepared by the action of formaldehyde on casein. Skim milk is treated with caustic alkali or alkali carbonate, the casein is precipitated by addition of acid, pressed, impregnated with formaldehyde, and

followed them. In general, however, while these products had extensive industrial uses as vehicles for paints, adhesives, putties and similar uses, they did not enter into direct competition with celluloid on account of their extreme brittleness, and the fact that they did not become plastic on heating. Whereas celluloid may be formed into sheets as thin as writing paper, the extreme thinness of casein sheets appearing in commerce is $\frac{1}{2}$ in. The elasticity, resiliency, and plasticity of the purely casein compounds have, therefore, been so inferior to celluloid for the uses to which the latter are especially applicable as to enter but little into direct competition with the pyroxylin plastics.

When compositions containing both casein and nitrocellulose were proposed, and brought into solution by means of a mutual solvent as glacial acetic acid, products appeared which were moldable and workable under heat and in which there appears a considerable degree of plasticity. Casein being incombustible, mixtures of the latter with pyroxylin decreased the inflammability of the plastic. According to the process of E. Franquet [1] the nitrocellulose—prepared according to any of the usual methods—is made plastic with camphor, and to the mass is added an intimate mixture of casein which has been previously treated with borax or sodium carbonate in aqueous solution for twenty-four to thirty-six hours previously. The combined pyroxylin and casein is then steeped in alcohol after pressing out the water, until the casein becomes partially transparent, when the alcohol is expressed and the mixing continued to a homogeneous mass by means of masticating machinery. The ratio of casein to celluloid is approximately equal parts.[2] The method of Barnodai is similar. In F.P. 331819, 1903, egg or blood albumin is treated

dried. This product has recently been used for the preparation of imitation tortoise-shell, and it is difficult to detect the imitation from the real material until it has been in use for a short time. L. Wolter (Chem. Zeit., 1909, **33**, 11) has found that treatment with fuming nitric acid affords a ready means of distinguishing "galalith" from tortoise-shell. A cutting of the material is boiled with a few cc. of fuming nitric acid: "galalith" yields a heavy yellow crystalline powder, insoluble in water and the ordinary organic solvents, while tortoise-shell dissolves almost completely with the exception of fine, transparent scales; on adding water to the solution, amorphous flocks slowly separate.

B. Goldsmith (U.S.P. 964964, 1910) prepares a thermoplastic compound by heating and combining casein, formaldehyde and β-naphthol and pressing the resulting mass. Instead of β-naphthol, α-naphthol, benzoic acid, phenol, hydroquinone, cresol, pyrocatechol, resorcinol, salicylic acid. urea, phthalic acid, phloroglucinol, pyrogallol, aniline, toluidine or xylidine may be used.

1. F.P. 312846, 1901; 317607, 1902; D.R.P. 138783, 1902; 139905, 1903; abst. J.S.C.I., 1902, **21**, 134.

2. See H. Ensminger, F.P. 326576, 1902, for similar process; P. Horn (D.R.P. 153228, 1902) treats casein 100 in water 200, with potassium hydroxide 5–10, and sulphur 10–30. Lead or zinc hydroxide or potassium or sodium silicates are used as fillers. See H. Brooks, U.S.P. 750048, 1904.

with a 5–10% aqueous formaldehyde for an hour, the excess of aldehyde removed by pressure and washing with water, the "formylated albumin" thus produced is dried at a temperature not exceeding 30° and mixed in the presence of alcohol with nitrocellulose and camphor.

In the process of L. Bethisy and Soc. M. Rose & Co.,[1] the nitrocellulose is bleached in a solution containing bleaching powder and aluminum and magnesium sulphates and is then treated in the wet condition (40–50% of moisture) with 15–20% of a mixture containing crystallized zinc chloride, 75; a solution of citric acid (50) in 90% alcohol (100), 20; aspic (spike-lavender) oil, 5 parts; and if desired, also with some coloring matter. The mass is well mixed by grinding, pressed to remove moisture, and dissolved in the following mixture: amyl acetate, 26.7 k.; ether, 15 k.; 90% alcohol, 7.5 k.; glacial acetic acid, 0.8 k.; and a solution of calcium chloride in its own weight of 90% alcohol, 20 k. The pasty mass is allowed to stand for twenty-four hours in a closed vessel, passed between rollers heated to 60°, till it is of the proper consistency, then covered with a solution of gelatin, albumin or protein in glacial acetic acid, again rolled, and formed into the desired objects. L. Bondet's composition[2] is prepared of resinous material, 6 parts, in alcohol, 8 parts, and another solution of the same resinous material, 2 parts, in 5 parts of a vegetable oil; these two solutions are mixed. A mixture is then made of 80 parts of gelatin and 20 parts of glucose and dissolved in half its weight of 45% alcohol; 13–15 parts of the first mixture are then mechanically incorporated with 85–87 parts of the second, the milling operation being continued for an hour at a temperature of 70°. This mixture is finally milled with about an equal weight of the ordinary celluloid paste, and rolled into sheets. The casein plastics are superior to celluloid in freedom from smell and inflammability, are usually harder, take a higher polish, and possess excellent insulating power. Their plasticity, however, is very feeble, and in this respect the pyroxylin plastics are far superior. It is impossible to cut sheets of galalith and the casein plastics thinner than about $\frac{1}{12}$ in., while celluloid may be planed in sheets of 0.003 in. and even thinner. Casein plastics have their greatest field as handles for knives and forks, combs, mirror backs and other water-insoluble and rigid articles.

Analysis of Celluloid[3] for most technical purposes may be confined to the determination of pigment, nitrogen, nitrocellulose and

1. F.P. 347303, 1904; F. Thomas (D.R.P. 163818, 1905) treats casein in 2% hydrochloric acid with 4% formaldehyde with a little glycerol.
2. F.P. 372599, 1906.
3. For "Reactions of Celluloid," see Cell. Ind., 1903, p. 21.

camphor. The determination of dyestuffs and stabilizers is seldom made. The methods used for the determination of these components, which are as the same time sufficiently expeditious to admit of commercial use, are as follows:

1. *Determination of Ash.* If the plastic contains no pigment and is transparent, the ash will seldom exceed 1% and may be determined by filing or rasping the sample to coarse powder, weighing off 1 gm., adding this to about 10 gm. melted and purified paraffin in a platinum or porcelain crucible. Heat is gradually applied until the mass ignites, when it is allowed to burn with a withdrawal of the flame. Afterward the flame is applied and the ash heated to bright redness. The ash consists principally of ferric oxide, presumably obtained from the iron machinery through which the plastic was forced to pass in the various stages of manufacture. If the ash is unduly high the presence of small amounts of silica may be suspected from sodium silicate used as an antacid or metallic salts of organic acids added for the same purpose. Where large amounts of pigment are present a determination of ash by the above method may lead to too low results, due to the ignition reducing certain carbonates (zinc) to oxides. The so-called "indirect method" is preferable in such plastics and consists in taking 5–10 gm. celluloid raspings, placing in a Soxhlet extraction apparatus in a Schleicher & Schuell fat thimble, and extracting with acetone. The fat thimble being tared, is reweighed after drying, the increase in weight corresponding to the percentage of pigment present.

2. *Determination of Solvent.* An approximation of the amount of solvent present is often desirable as indicating the completeness with which the plastic has been seasoned. It is understood that manufacturers do not attempt to entirely eliminate the solvent, but simply sufficient so as to produce a minimum warpage. Any determination due to loss in weight by heating can be but comparative, the accuracy being effected by the volatilization of camphor under heat. One method, satisfactory for commercial work, is to prepare a two gram sample by finely rasping the plastic, this being placed in a thin layer on platinum foil in an oven kept at 100° by active boiling of water in the outer jacket, the temperature being maintained for four hours. After cooling in a desiccator, the loss in weight is considered as volatile solvents, careful experiments having shown that under the conditions above named the volatilization of camphor is about counterbalanced by traces of solvent still remaining in the plastic. It is necessary to spread the raspings out in a thin layer so that the elevated temperature will not soften the camphor and cause a large number of particles to coalesce.

Determination of Nitrogen and Cellulose Nitrate. The method often suggested of stirring a weighed quantity of the finely divided celluloid by means of a platinum wire with conc. sulphuric acid in the cup of a Lunge nitrometer, the nitrogen being determined afterward in the solution in the usual way, is open to serious criticism due to possible interference of the camphor or carbonates, and the presence of urea, acetanilid or other nitrogen-containing stabilizer. To prevent interference from camphor, H. Zaunschirm [1] suggests to dissolve a weighed quantity of the celluloid in a mixture of ether and alcohol, and add a weighed quantity of pumice stone or washed and ignited asbestos, the mixture being evaporated to dryness with stirring. The mass is ground up, and the camphor, urea, etc., extracted with chloroform, in which the cellulose nitrates is insoluble. Then extract with acetone, evaporate the acetone extract to dryness, and dissolve this residue in sulphuric acid in the nitrometer in the usual manner. If zinc carbonate or other carbonates are present, addition of sulphuric acid to the celluloid will evolve carbon dioxide, which will increase the volume of gas in the nitrometer, and give too high nitrogen results. To obviate possibility of inaccuracy from this source, dissolve the weighed sample in acetic acid, carbonates being decomposed, and oxalates not occurring in celluloid. The gradual addition of ten volumes of water to the acetic acid-celluloid solution, constantly stirring during the addition of water, causes a precipitation of both camphor, urea and cellulose nitrate, the carbonates changing into the corresponding acetates, readily soluble in the volume of water present. The precipitate of camphor and pyroxylin is separated by filtration, the filtrate washed with water until practically neutral, and dried at 100°. The filter is next placed in a Soxhlet extractor, and extracted with ligroin or benzol, the camphor and stabilizer (if any) being dissolved out. The tared filter after drying is weighed again, the difference between the weight of original sample taken and weight of residue not extracted by ligroin, giving the camphor, stabilizers and carbonates present. The camphor and stabilizer is determined in the ligroin extract, and the carbonates in the aqueous extract. The residue on the tared filter is cellulose nitrate, which may be weighed, and then placed in a nitrometer for nitrogen estimation. This forms an expeditious and fairly accurate method of determining camphor, carbonates, cellulose nitrates and nitrogen from a single sample. Where paper pyroxylin has been used in the plastic, the result will be about 11.2% N. in the cellulose nitrate.

1. Chem. Zeit., 1890, **14**, 905; abst. J.S.C.I., 1890, **9**, 979.

Utz [1] determines the nitrogen in celluloid by saponification of a sample with caustic alkali in the presence of hydrogen dioxide, all the nitrogen in the celluloid being obtained as alkaline nitrite and nitrate. By acidifying and adding more hydrogen dioxide, the nitrous acid is oxidized quantitatively to nitric acid. A solution of "nitron" [2] is then added, the nitron nitrate precipitating from the solution in crystalline form. The crystals are carefully dried and weighed, the weight found multiplied by 0.168, giving the weight of nitric acid in the sample taken, the precipitate of nitron nitrate containing 3.74% of nitrate nitrogen.

Determination of Camphor. Three classes of methods are applicable for the determination of camphor in celluloid, as follows: (*a*) by the polariscope; (*b*) by indirect analysis; (*c*) by means of the immersion refractometer.[3]

According to method (*a*) as worked out by F. Forster for the determination of camphor in celluloid, a quantity of the finely divided sample containing 2–3 gm. of camphor is treated in a flask furnished with condenser and tapped funnel, with sufficient 10% caustic soda solution to saponify the substance.[4] The flask is heated to about

1. Gum. Ztg., 1907, **7**, 103; 1908, No. 23, Dec. 4, p. 19.

2. The liquid is diluted with water so as to form a nitric acid solution of strength between 1–3%; the solution is heated nearly to boiling and 10 drops 10% sulphuric acid and sufficient 10% solution nitron in 5% acetic acid added so that the latter is in excess. The mixture is then placed in ice water for two hours, the crystals which form being collected on a tared filter, dried and weighed. Any crystals remaining in the precipitating vessel are rinsed onto the filter with a portion of the filtrate. The filter and crystals are washed with 3 or 4 small quantities of ice water, using not more than 10 cc. in all. Nitron is 1:4-diphenyl-3:5-endoanilo-4:5-dihydro-1:2:4-triazole, $C_{20}H_{16}N_4$, being shiny, yellow leaflets or amorphous powder; m.pt. 189° with decomposition; sol. in alcohol, chloroform, acetone and ethyl acetate, difficultly sol. in ether and insol. in water. In alcohol the substance partially decomposes and turns red. See M. Busch, Ber., 1905, **38**, 861; abst. J.C.S., 1905, **88**, II, 282; A. Gutbier, Zeit. ang. Chem., 1905, **18**, 494; abst. J.C.S., 1905, **88**, II, 418; M. Busch, J. pr. C., 1906, II, **74**, 533; abst. J.C.S., 1907, **92**, I, 259; J. Litzendorff, Zeit. ang. Chem., 1907, **11**, 2209; abst. J.C.S., 1908, **94**, I, 130; Busch and Blume, Ibid., 1908, **12**, 355; C. Paal and A. Ganghofer, Zeit. anal. Chem., 1909, **48**, 545; abst. J.C.S., 1909, **96**, 759.

3. Utz, G.Z., Mar. **15**, 1907, p. 11; Cell. Ind., 1907, **2**, 53.

4. Ber., 1890, **23**, 2981; abst. J.S.C.I., 1890, **9**, 1159. See also E. Lott, G.Z., Oct. 26, 1906; A. Arnost, G.Z., 1907, 8, 33, from Z. Nahr. Genussm., 1906, **53**, 2; abst. C.A., 1907, 156. He mixes 11 gm. finely shredded celluloid in an Erlenmeyr flask with 100 gm. 25% caustic soda solution, shakes frequently during an hour. A two-hole rubber stopper is then inserted, through whose openings a glass stopcock funnel and a generating tube is fitted. The latter is connected to a condenser and the contents of the flask heated to about 80° until complete saponification takes place, and this may be recognized by entire disintegration of the celluloid to an opalescent, uniformly thick solution. The heat is then increased and the camphor distills over. Alcohol in small amounts is introduced into the flask by means of the separatory funnel, and heating continued until no more camphor passes over. The condenser consisting of a 100 cc. flask, is then filled with alcohol to the mark, and the amount of camphor dissolved therein determined as follows. In the apparatus shown in Fig. 259 the part *B* is filled to the mark 90 by means

80° until saponification is complete, when sufficient strong alkali is added to raise the amount of NaOH in the flask to 10%. The contents of the flask are then diluted to about 250 cc. and distilled until the distillate has no camphor odor. The condenser is connected air-tight with the receiver, and should have a second orifice fitted with a U-tube containing a known volume of benzene, to intercept any uncondensed camphor vapor. When all the camphor has passed over, this benzene is added to the total distillate, and enough more added to bring the total volume of benzene to 25 cc. The camphor is then dissolved in the benzene by agitating the contents of the receiver, the latter separated from the water, brought to a temperature of 20° and the optical activity observed in the polariscope. According to Forster the specific rotatory power of camphor in benzene is $+39.755°+0.17254\ t$, whereby $[a]_D=+40.11°$ at 20°. According to Landolt's formula $[a]_D=+55.4°-(a\times q)$ where q equals the number of gm. solvent in 100 gm. solution, the value of a varying with the solvent and being 0.1372 for alcohol and 0.1632 for benzene.

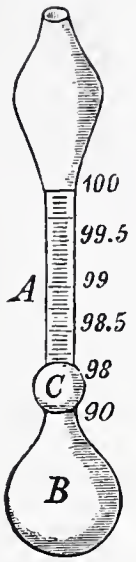

FIG. 259

With method (*b*) the camphor may be separated as described under (*a*), and the distillate extracted with petroleum ether,[1] the increase in volume of the ether being the measure of the camphor content, assuming each increase in cc. of fluid is equivalent to 1 gm. camphor. Or the camphor may be determined by difference by precipitating the nitrocellulose from a given weight of celluloid in acetone solution by means of ammonium chloride solution[2] and deducting this weight from the original weight of celluloid.

of a long-stem funnel with acidulous water (15 cc. sulphuric acid, 110 cc. water, and a trace of some aniline dye to color), then add 10 cc. of the above-obtained alcoholic camphor solution and 50 cc. petroleum ether. The apparatus is then closed with a rubber stopper, shaken vigorously for two minutes, left standing for 30 minutes at 15°, after which the increase in volume of the petroleum ether is read off. As a definite contraction occurs the alcohol-camphor solution with water, the following correction is necessary: A blank determination is run by distilling the same volume of alcohol and caustic soda solution, determining the alcoholic content of the distillate by means of alcoholmetrical tables and then adding the same amount of petroleum ether and observing the contraction which takes place. Arnost obtained 99.6% of the camphor introduced by distilling in this manner for three hours. It must be remembered that the reading of camphor is by volume, while the sp.gr. of camphor at 15° is 0.993.

1. Utz, G.Z., 1908, **8**, No. 23, Dec. 4, p. 19; 1907, **7**, 53.

2. H. Dubowitz, Chem. Zeit., 1906, **30**, 936; abst. G.Z., 1906, **6**, 26. He shakes 2 gm. finely shredded celluloid with 100 cc. acetone in a 150 cc. flask, until the maximum solution takes place. Acetone is then added to 150 cc., and 100 cc. taken for the determination of nitrocellulose, the remaining 50 cc. being shaken with 25 cc. of an 8% ammonium chloride solution in the cold. The precipitate formed

In method (*c*) the camphor is quantitatively extracted from fine celluloid shavings by means of light petroleum ether boiling at 30–40° in a Soxhlet apparatus. The solvent is evaporated off by means of a current of cold air, and the residual camphor dissolved in pure methyl alcohol to 100 cc. After bringing the solution to the standard temperature of 17.5° its refractive index is determined by means of an immersion refractometer.[1] By the aid of the subjoined table, the camphor content can be deduced from the refractivity, N being the refractometer reading of the solution, and n, that of methyl alcohol.

Determination of Temperature of Ignition. In connection with the Heat Test (see Chapter XVIII) is of great value as indicating the stability.[2] The author is unaware of any recognized method for this determination. Satisfactory results are obtained by taking 0.2–0.4 gm. of the finely divided sample, in a test tube and determining the heat of ignition, using the Tagliabue Flash Tester for lubricat-

is separated by paper filtration or through a Gooch crucible, the camphor dissolved from it by washing with a mixture of equal parts ammonium chloride solution and acetone, after which it is washed with absolute alcohol. The undissolved portion is then dried to constant weight at 60°. The ash is determined directly by ignition. From the weight found the following computations may be made: A weight of celluloid taken; C weight of ash. Then the camphor $= A - 3a$, or camphor $-\% = \frac{100}{A}(A - 3a)$. Nitrocellulose $= 3\ (a - c)$ or nitrocellulose $\% = \frac{300}{A}(a - c)$. Ash $-\% = 100$ (Camphor $-\%$ + nitrocellulose $\%$). The 100 cc. acetone solution first withdrawn for determination of soluble nitrocellulose together with the 8% ammonium chloride solution extract, is transferred, the precipitate filtered, washed, and moistened with alcohol, transferred to a 150 cc. graduated flask, shaken with 50 cc. absolute alcohol and let stand twelve hours. Then 50 cc. of the clear fluid is carefully withdrawn, evaporated in a platinum capsule to dryness, the weight being soluble nitrocellulose. As a control, 50 cc. more of the solution may be precipitated by chloroform, the precipitate filtered, dissolved in ether-alcohol, precipitated with chloroform again, filtered and dried to constant weight at 60°. The nitrogen is determined in a Lunge nitrometer in the usual manner.

1. As a physical means of determining camphor in celluloid, the refractometer is preferable to the polariscope, because natural and synthetic (inactive) camphors have identical refractivities.

2. This is of great importance in judging of the safety of the material for transportation and the probability of decomposition and ignition when exposed to certain conditions existing in railway cars. For instance, the instructions of the Pennsylvania Railroad in regard to steam heat in passenger trains state that the pressure used should be approximately 5 lb. per sq .in. per car. In a 10 car train the pressure on the train line would be about 50 lb. per sq.in., which pressure may be increased if the heating of the train requires it. 50 lb. steam pressure will give a temperature of 139°. Practically any pyroxylin plastic or cellulose nitrate colloid when exposed to such a temperature for several hours is liable to very rapid decomposition, usually culminating in ignition, or explosion. Where cases containing pyroxylin plastics are placed against steam pipes in an express car, it is not necessary to assume poor quality of the plastic to explain the cause of a fire under such circumstances. Colonel B. W. Dunn, Chief Inspector for the "Bureau for the Safe Transportation of Explosives and Other Dangerous Articles" has done much toward the education of packers, shippers and transportation companies in regard to this subject, and his suggestions, noted elsewhere, should be given the widest publicity. (See Chapter XXII.)

ing oil, commencing at 100° and raising the temperature at the rate of 3° per minute until the ignition point is reached. Transparent

DETERMINATION OF CAMPHOR BY REFRACTOMETER

Scale Division (Methyl Alcohol =8.00).	$N-n$	Gm. of Camphor per 100 cc.	Scale Division (Methyl Alcohol =8.00).	$N-n$	Gm. of Camphor per 100 cc.	Scale Division (Methyl Alcohol =8.00).	$N-n$	Gm. of Camphor per 100 cc.	Scale Division (Methyl Alcohol =8.00).	$N-n$	Gm. of Camphor per 100 cc.
8.0	0.0	0.000	12.6	4.6	1.150	17.1	9.1	2.33	21.6	13.6	3.68
8.1	0.1	0.025	12.7	4.7	1.175	17.2	9.2	2.36	21.7	13.7	3.72
8.2	0.2	0.050	12.8	4.8	1.200	17.3	9.3	2.39	21.8	13.8	3.75
8.3	0.3	0.075	12.9	4.9	1.225	17.4	9.4	2.42	21.9	13.9	3.78
8.4	0.4	0.100	13.0	5.0	1.250	17.5	9.5	2.45	22.0	14.0	3.81
8.5	0.5	0.125	13.1	5.1	1.275	17.6	9.6	2.47	22.1	14.1	3.84
8.6	0.6	0.150	13.2	5.2	1.300	17.7	9.7	2.50	22.2	14.2	3.87
8.7	0.7	0.175	13.3	5.3	1.325	17.8	9.8	2.52	22.3	14.3	3.90
8.8	0.8	0.200	13.4	5.4	1.350	17.9	9.9	2.55	22.4	14.4	3.93
8.9	0.9	0.225	13.5	5.5	1.375	18.0	10.0	2.58	22.5	14.5	3.96
9.0	1.0	0.250	13.6	5.6	1.400	18.1	10.1	2.61	22.6	14.6	4.00
9.1	1.1	0.275	13.7	5.7	1.425	18.2	10.2	2.64	22.7	14.7	4.03
9.2	1.2	0.300	13.8	5.8	1.450	18.3	10.3	2.67	22.8	14.8	4.06
9.3	1.3	0.325	13.9	5.9	1.475	18.4	10.4	2.70	22.9	14.9	4.09
9.4	1.4	0.350	14.0	6.0	1.500	18.5	10.5	2.73	23.0	15.0	4.12
9.5	1.5	0.375	14.1	6.1	1.525	18.6	10.6	2.76	23.1	15.1	4.15
9.6	1.6	0.400	14.2	6.2	1.550	18.7	10.7	2.79	23.2	15.2	4.18
9.7	1.7	0.425	14.3	6.3	1.575	18.8	10.8	2.82	23.3	15.3	4.20
9.8	1.8	0.450	14.4	6.4	1.600	18.9	10.9	2.85	23.4	15.4	4.23
9.9	1.9	0.475	14.5	6.5	1.625	19.0	11.0	2.88	23.5	15.5	4.26
10.0	2.0	0.500	14.6	6.6	1.650	19.1	11.1	2.91	23.6	15.6	4.29
10.1	2.1	0.525	14.7	6.7	1.675	19.2	11.2	2.94	23.7	15.7	4.32
10.2	2.2	0.550	14.8	6.8	1.700	19.3	11.3	2.97	23.8	15.8	4.35
10.3	2.3	0.575	14.9	6.9	1.725	19.4	11.4	3.00	23.9	15.9	4.38
10.4	2.4	0.600	15.0	7.0	1.750	19.5	11.5	3.03	24.0	16.0	4.41
10.5	2.5	0.625	15.1	7.1	1.775	19.6	11.6	3.07	24.1	16.1	4.44
10.6	2.6	0.650	15.2	7.2	1.800	19.7	11.7	3.10	24.2	16.2	4.47
10.7	2.7	0.675	15.3	7.3	1.825	19.8	11.8	3.13	24.3	16.3	4.50
10.8	2.8	0.700	15.4	7.4	1.850	19.9	11.9	3.16	24.4	16.4	4.53
10.9	2.9	0.725	15.5	7.5	1.875	20.0	12.0	3.19	24.5	16.5	4.55
11.0	3.0	0.750	15.6	7.6	1.900	20.1	12.1	3.22	24.6	16.6	4.58
11.1	3.1	0.775	15.7	7.7	1.925	20.2	12.2	3.25	24.7	16.7	4.61
11.2	3.2	0.800	15.8	7.8	1.950	20.3	12.3	3.28	24.8	16.8	4.64
11.3	3.3	0.825	15.9	7.9	1.975	20.4	12.4	3.31	24.9	16.9	4.67
11.4	3.4	0.850	16.0	8.0	2.000	20.5	12.5	3.34	25.0	17.0	4.70
11.5	3.5	0.875	16.1	8.1	2.03	20.6	12.6	3.37	25.1	17.1	4.73
11.6	3.6	0.900	16.2	8.2	2.06	20.7	12.7	3.40	25.2	17.2	4.76
11.7	3.7	0.925	16.3	8.3	2.09	20.8	12.8	3.43	25.3	17.3	4.79
11.8	3.8	0.950	16.4	8.4	2.12	20.9	12.9	3.47	25.4	17.4	4.82
11.9	3.9	0.975	16.5	8.5	2.15	21.0	13.0	3.50	25.5	17.5	4.85
12.0	4.0	1.000	16.6	8.6	2.18	21.1	13.1	3.53	25.6	17.6	4.88
12.1	4.1	1.025	16.7	8.7	2.21	21.2	13.2	3.56	25.7	17.7	4.91
12.2	4.2	1.050	16.8	8.8	2.24	21.3	13.3	3.59	25.8	17.8	4.94
12.3	4.3	1.075	16.9	8.9	2.27	21.4	13.4	3.62	25.9	17.9	4.97
12.4	4.4	1.100	17.0	9.0	2.30	21.5	13.5	3.65	26.0	18.0	5.00
12.5	4.5	1.125									

celluloid should not ignite much below 170°, and celluloid-containing pigments, which increase the stability, at a somewhat higher tem

perature. In order that the results be strictly comparative, it is essential that the same method be followed closely each time.[1]

Recent analyses made by the author of seasoned celluloid by the above-described methods have given the following results:

Determinations.	Colorless Sheets.	Amber Pipe Stems	Tortoise Shell Combs.	"Grain Ivory" Paper Cutter.
Volatile Matter	0.9%	1.32%	0.8%	1.4%
Ash	1.06	1.21	1.03	15.9
Camphor	23.8	24.6	28.1	20.4
Cellulose Nitrate	75.4	73.8	71.2	63.2
Nitrogen in Nitrocellulose	11.02	11.17	11.08	11.47
Temperature of Ignition	164°	168°	160°	172°

1. M. Jones (Quarterly National Fire Protective Association, July, 1908, p. 140) has recorded fifty or more tests made upon celluloid plates of varying thickness. The kinds tested include "amber," "tortoise-shell," "white," and "transparent." The apparatus used consisted of a single wall tin oven 5.5 in. diameter and 6 in. high. An iron gauze plate 2 in. in diameter was suspended by three wires from the top of the oven about 3 in. from the bottom. A tin tube $\frac{3}{8}$ in. in diameter, open at the bottom was placed in the oven in a perpendicular position to allow the insertion of a thermometer bulb. Another hole in the roof of the oven allowed the insertion of thermometer which extended only as far as the wire gauze. An opening about 1 in. square in the roof, covered with a piece of tin, allows ventilation. The oven was heated by a small 2 burner kerosene stove placed 1 in. below the oven. The table records the nature of the material, approximate weight in grams, temperature at which the test started, decomposing temperature, temperature at bottom of oven, result (flame or explosion), time which elapsed until explosion took place. In a second series of experiments the material was placed in a tin box $1\frac{3}{8} \times 2\frac{1}{8}$ in. and $1\frac{1}{2}$ in. high, having a capacity of 70 cc. The box was placed upon the wire-gauze plate with the bulb of the one thermometer resting upon the wire-gauze plate, close to the box. The range of explosive effects in this covered box of 70 cc. capacity using a sample $\frac{1}{16} \times \frac{1}{16}$ in. of 0.012 in. thickness and 0.01 to 0.04 gm. weight as regards volume of celluloid to volume of the box was 1:2500 and 1:10000.

UNITED STATES PATENTS RELATING TO PYROXYLIN PLASTICS.

4874, Schönbein, Manufacture of nitrocellulose.
43166, von Lenk, Manufacture of nitrocellulose.
48231, G. Ray, Imitation linen collar of pyroxyl.
50083, Revy, Manufacture of pyroxylin.
59888, F. Abel, Purifying guncotton.
60571, F. Schaffner, Manufacture of guncotton.
65267, W. H. Pierson, Improved plastic compound made from vegetable fibers.
77304, J. A. McClelland, Improved material for dental plates.
79261, C. A. Seely, Improvement in solidified collodion.
86841, J. L. Kendall, R. H. Trested, Coating textile fabrics.
88228, L. R. Streeter, Method of veneering articles with pyroxylin.
88260, L. R. Streeter, Improved composition for dental plates.
89253, L. R. Streeter, Improved dental plate.
89254, L. R. Streeter, Process for treating pyroxylin for forming articles.
89582, J. W. Hyatt, D. W. Blake, Ivory dust and other materials.
90765, 90766 J. A. McClelland, Machine for treating collodion.
91341, J. W. Hyatt, Jr., and I. S. Hyatt, Method of making solid collodion.
91377, D. Spill, Improvement in compounds containing xyloidine.
91378, D. Spill, Method of protecting insulated telegraph wire.
96132, J. A. McClelland, Producing useful articles from collodion.
97454, D. Spill, Improvement in dissolving xyloidine.
101175, D. Spill, Improvement in manufacture xyloidine.
103209, J. Lewthwaite, Improvement in coating fabrics with parkesine.
105338, J. W. Jr., & I. S. Hyatt, Treating pyroxylin. (Reissue 5928, 1874; 10546, 1884).
105823, J. A. McClelland, Process of coating objects with collodion.
114242, R. H. Winsborough, Preparation of pyroxylin for dental plates.
127656, V. Smith, Compounds for dental purposes.
128450, J. Muschamp, Explosive substance.
133229, I. S. & J. W. Hyatt, Process for manufacturing pyroxylin.
133969, L. Dietz & B. P. Wayne, Manufacture of pyroxylin articles.
136735, N. Jones, Truss plate or pad of pyroxylin.
136953, Babcock, Leonard & Crane, Pyroxylin match composition.
138254, J. W. Hyatt, Manufacturing pyroxylin articles.
141654, S. Mackie, Making guncotton.
143772, J. A. McClelland, Improvement in collodion compounds.
143865, H. T. Anthony, Preparing soluble cotton.
150722, D. D. Smith, Artificial coral for jewelry.
152232, I. S. & J. W. Hyatt, Apparatus and process for molding celluloids.
153196, R. F. Hunt, Molding celluloids for dentists.
156352, I. S. & J. W. Hyatt, Manufacturing solidified collodion.
156353, I. S. & J. W. Hyatt, Manufacture of celluloid.
156354, I. S. & J. W. Hyatt, Improvement in factitious ivory.
156355, I. S. & J. W. Hyatt, Improvement in manufacture of brushes.
162752, R. F. Hunt, Process for softening and molding celluloid.
165234, J. W. & I. S. Hyatt, Improvement in grinding wheels.
172995, F. Greening, Making soluble guncotton.
173865, E. Reagles, Compositions for dental plates.
184481, P. Sweeny, Improvement in lubricating compounds.
187593, I. P. Brown, Jr., & A. A. Sanborn, Emery grinding wheels.
199908, J. W. Hyatt, Manufacture sheets of celluloid and other plastics.
199909, J. Hyatt, Manufacture celluloid combs.
200939, R. H. & A. A. Sanborn & C. O. Kanouse, Collars and cuffs.
202441, J. W. Hyatt, Coating articles with celluloid.
203834, J. W. Hyatt, Improvement in shoe tips.

204227, 204228, J. W. Hyatt, Apparatus for covering cores and forming tubes of celluloid.
204229, J. W. Hyatt & C. Burroughs, Coating bars or springs with celluloid.
205271, J. W. Hyatt, Manufacture of sheets of celluloid.
205836, W. B. Carpenter, Improvement in bracelets.
205880, D. C. Lockwood, Strips for coating articles with celluloid.
209570, J. W. Hyatt, Improvement in varnishes.
210611, J. Hyatt, Nitration of cotton.
210612, J. W. Hyatt & J. G. Jarvis, Apparatus for washing paper pulp.
210780, J. W. Hyatt, Celluloid piano key.
216474, V. Tribouillet & A. de Besancele, Nitration of cotton.
217111, R. A. Johnston, Moldings and other articles from celluloid.
217232, W. McCaine, Process for treating pyroxylin.
217474, V. Tribouillet & A. de Besancele, Manufacturing solid collodion.
218122, J. W. Hyatt, Manufacture of cards, labels, etc., from celluloid.
219218, W. B. Carpenter, Reducing celluloid tubes to taper.
219235, J. B. Edson, Methods of drying celluloid.
219279, M. C. Lefferts, Celluloid lining for ice pitchers.
220386, C. O. Kanouse & A. A. Sanborn, Celluloid collars and cuffs.
220502, J. S. Spencer, Celluloid frames for optical instruments.
221070, J. W. Hyatt, Polishing and seasoning celluloid sheets.
221977, A. A. Sanborn, Celluloid collars and cuffs.
229477, J. & C. Schmerber & J. A. Arrault, Grinding machine for celluloid.
232037, J. W. Hyatt, Manufacture of celluloid.
233558, J. & C. Schmerber, Treating pyroxylin.
233851, N. Hart & R. A. Bacon, Decorating celluloid.
233878, A. A. Sanborn, Elastic dies for pressing celluloid collars and cuffs.
234675, C. M. Jacob, Composition for coating surfaces.
235932, W. B. Carpenter, Necking celluloid tubes.
235933, W. B. Carpenter, Coloring eyebrows of celluloid dolls.
235953, M. C. Lefferts, Syringes from celluloid.
235954, M. C. Lefferts, Spoons and forks from celluloid.
236034, J. W. Hyatt, C. S. Lockwood, & J. H. Stevens, Imitation ivory and horn.
237168, W. B. Carpenter, Apparatus for molding hollow celluloid forms.
237279, S. J. Hoggson, & G. C. Pettis, Producing and treating pyroxylin,
237559, M. Lefferts, Celluloid doll.
237779, M. C. Lefferts & W. B. Carpenter, Celluloid doll.
238927, M. C. Lefferts, Manufacture of celluloid stays.
239423, L. S. Beals, Treating pyroxylin.
239424, 239425, L. S. Beals, Preparing pyroxylin.
239791, J. W. Hyatt, Apparatus for molding celluloid.
239792, J. W. Hyatt, Applying designs of articles made of plastic material.
239793, J. W. Hyatt, Mold or die for forming buttons.
239794, J. W. Hyatt, Manufacture of imitation ivory.
241004, N. Hart & R. A. Bacon, Manufacture of celluloid playing cards.
241005, N. Hart & R. Bacon, Pyroxylin printing ink.
244916, O. Monroe, Treating pyroxylin scraps.
245952, S. J. Hoggson & G. C. Pettis, Plastic compounds from pyroxylin.
246678, J. W. Hyatt, Process of preparing compounds of nitrocellulose.
246891, C. S. Lockwood, Treatment of pyroxylin.
247734, C. O. Kanouse, Manufacture of plastic compositions from soluble fiber.
248413, I. W. Drummond, Compound of celluloid and calcium sulphide.
249600, J. B. Edson, Drying apparatus for pyroxylin.
251258, D. C. Lockwood, Forming hollow rings of celluloid.
251259, D. C. Lockwood, Forming solid rings of celluloid.
251260, D. C. Lockwood, Hollow articles coated with celluloid.
251410, W. B. Carpenter, Waterproofing paper with celluloid.
251731, G. Phelps, Artificial whalebone.
251938, F. V. Pool, Removing flocculent material from spent acids.
253001, E. Cary, Machine for creasing, bending, and shaping celluloid collars.
253480, W. B. Carpenter, Waterproof paper.
253840, W. Carpenter, Coating paper with celluloid.
254280, F. W. Cottrell, Material to form artificial ivory.

254439, J. W. Hyatt, Drying sheets of plastic material.
254751, L. White & K. Whitcomb, Galvanometer to determine fiber nitration.
256596, Hunt & Eastwood, Pyroxylin printing ink.
256597, P. Hunt & J. Eastwood, Pyroxylin for use in topical printing.
257607, H. Parkes, Treatment of cellulose.
258480, A. A. Sanborn, Celluloid collars and cuffs.
259826, M. F. Davis, Molded boat from celluloid.
262077, W. McCaine, Pyroxylin compound.
264987, E. Weston, Plastic compound from soluble cellulose.
265337, H. Parkes, Manufacture of nitrocellulose.
269340, 269341, 269342, 269343, 269344, 269345, J. H. Stevens, Solvents of pyroxylin.
270538, M. P. Bogert, Combining celluloid with fabric.
271035, W. B. Carpenter, Plastic eyelet.
271493, J. A. McClelland, Pyroxylin fabric.
271494, J. A. McClelland, Process of veneering.
271495, J. McClelland, Apparatus for veneering with pyroxylin.
271496, J. McClelland, Mold for veneering with pyroxylin.
274335, J. Hyatt & F. Pool, Purifying nitrating acid.
275215, I. S. Hyatt, Manufacturing sheets of celluloid.
275216, I. S. Hyatt, Molding celluloid.
276248, I. S. Hyatt, Manufacturing celluloid collars and cuffs.
276443, W. McCaine, Treating pyroxylin compounds.
277693, J. B. Edson, Drying sheets of celluloid.
277694, J. B. Edson, Nozzle for making celluloid rods and tubes.
278321, A. B. Diss, Mold for forming celluloid articles.
278667, A. Olszewski, Producing celluloid rods or tubes.
280659, A. Olszewski, Machine for treating pyroxylin compounds.
280745, J. W. Hyatt, Press or mold for coating celluloid articles.
281529, M. C. Lefferts, Apparatus for lining hollow articles with celluloid.
282451, J. A. Furman, Apparatus for molding hollow articles from celluloid.
283224, J. B. Edson, Apparatus for forming thin sheets of celluloid.
283225, J. B. Edson, Manufacture of artificial ivory.
286212, D. & D. McCaine, Process of treating pyroxylin.
286535, O. Everding, Machine for cutting up celluloid sheets.
286541, J. W. Hyatt & C. S. Lockwood, Securing glass to a backing.
288955, A. A. Sanborn, Celluloid collar or cuff.
289239, J. B. Edson, Apparatus for polishing sheets of xylonite.
289240, J. B. Edson, Finishing xylonite-coated surfaces.
289241, J. B. Edson, Patent leather and substitute therefor.
289242, J. B. Edson, Forming and finishing xylonite collars and cuffs.
289338, J. B. Edson, Treating with xylonite to resemble pebble-goat.
290553, J. B. Edson, Combining xylonite sheets with other sheeted substances.
294557, W. V. Wilson, Material for electric insulation.
294661, G. M. Mowbray, Mica and pyroxylin plastic.
296967, J. W. Hyatt, Manufacture of celluloid.
296968, J. W. Hyatt, W. H. Wood, J. H. Stevens, Desiccation of pyroxylin pulp.
296969, J. W. Hyatt, W. H. Wood, J. H. Stevens, J. Everding, Manufacture of pyroxylin material.
269970, J. W. Hyatt, W. H. Wood, J. H. Stevens, Manufacture of celluloid.
297098, J. Stevens & W. Wood, Veneering cloth with pyroxylin.
297770, J. B. Edson, Finishing pyroxylin-coated fabrics.
297935, J. Hyatt, Drying pyroxylin.
299388, J. W. Hyatt, F. V. Pool, J. Everding, J. H. Stevens, W. H. Wood, Manufacture of nitrocellulose.
299389, 299390, J. W. Hyatt, Manufacture of celluloid combs.
299802, E. Kipper, Process for making solid rings of plastic compounds.
299804, E. Kipper & J. B. Edson, Brush bodies from pyroxylin.
299857, E. Schering, Preparation of collodion.
300158, J. H. Stevens, Material to imitate ivory.
301995, J. Hyatt, Dividing celluloid into sheets.
306519, F. V. Pool, Manufacture of soluble nitrocellulose.
307032, J. B. Edson, Manufacture artificial ivory.

309831, J. B. Edson, Manufacture artificial ivory.
311203, I. V. Reagles, Composition for waterproofing.
320884, G. M. Mowbray, Plastic-compound resembling ivory.
322729, Emil Kipper, Collar or cuff.
326119, J. W. Hyatt & John Everding, Solid compounds.
328843, J. France, Cellonite, partsine, etc., articles.
329093, J. H. Stevens & W. H. Wood, Production of enameled goods.
329273, C. C. Chickering, Articles from celluloid and other plastics.
329313, J. G. Jarvis, Manufacture of pyroxylin compounds.
330838, Emil Kipper, Collar or cuff.
331241, J. W. Hyatt, Combining pyroxylin solvents in solids.
331242, J. W. Hyatt, Combining pyroxylin and solvents.
331713, J. W. Hyatt, Compounding pyroxylin with solvents.
333469, E. Kipper, Process of coating handles.
335935, E. Kipper, Solid rings from pyroxylin.
336822, F. Pool, Nitrating acids.
342208, J. Jarvis, Manufacture of zylonite compounds.
343903, J. Jarvis, Collar or cuff.
345982, H. Miller, Manufacturing mirror backs.
345983, H. Miller, Backs for brushes from celluloid.
346376, M. C. Lefferts, Printing or decorating celluloid surface.
348222, M. Lefferts & J. Hyatt, Printing on pyroxylin compounds.
349658, G. Mowbray, Bleaching pyroxylin.
349659, G. Mowbray, Method of drying pyroxylin.
349987, J. Edson, Formation of xylonite sheets.
350049, J. Edson, Mounting pyroxylin.
350497, 350498, G. Mowbray, Nitration of cotton.
350577, W. Carpenter, Game counter.
356108, J. Edson, Apparatus for working zylonite.
360811, J. McClelland, Ornamenting pyroxylin compounds.
365768, J. Furman, Molding mouth-pieces for whistles.
366231, J. McClelland, Plastic compound.
368277, W. Carpenter, Fishing line reel.
368501, F. Jones & J. Jarvis, Hollow forms from plastic material.
369784, J. Furman, Molding hollow celluloid articles.
370546, A. LeRoy, Producing designs upon celluloid.
371021, 372100, O. Amend, Pyroxylin solvent.
380654, M. Lefferts, Ink.
381354, W. Field, Pyroxylin varnish.
383272, A. Bensinger, Ornamenting celluloid surfaces.
384005, E. Todd, Pyroxylin lacquers.
388287, E. Kipper, Collar or cuff.
392794, 393750, J. France, Collar or cuff from pyroxylin.
393751, J. France, Manufacture pyroxylin compounds.
393752, J. France, Manufacture of celluloid.
393753, J. France, Manufacturing articles from pyroxylin compounds.
394559, H. de Chardonnet, Pyroxylin filaments.
405874, K. Collins, Celluloid binding.
406597, R. Schüpphaus & M. White, Nitration of cotton.
408344, F. Greening, Substitute for ivory.
409345, C. Brady, Printing on pyroxylin compounds.
410204, 410205, 410206, 410207, 410208, 410209, R. Schüpphaus, Pyroxylin compound.
410404, H. de Chardonnet, Denitrating pyroxylin.
415566, F. Rowell, Coating celluloid plates.
417202, H. Reichenbach, Manufacturing flexible photographic films.
417727, J. Jarvis, Ornamenting pyroxylin articles.
418136, C. Koyl, Silvered celluloid reflector.
418237, R. Schüpphaus & M. White, Manufacturing pyroxylin compounds.
418787, J. France, Collar or cuff.
419257, J. Hyatt, Waterproof collar or cuff.
419258, 419259, 419260, 419261, 419262, 419263, J. Hyatt, Collar or cuff.
420445, J. R. France, Soluble nitrocellulose.

420446, J. R. France, Insoluble nitrocellulose.
420447, J. R. France, Cotton fiber dust.
421367, W. Wood & G. Gillmore, Embossing celluloid sheets.
421860, J. France, Collar and cuff.
422195, W. Field, Pyroxylin varnish.
422302, J. Hyatt, Collar or cuff.
422303, J. Hyatt, Celluloid collar or cuff.
425129, J. France, Waterproof collar.
425679, E. Kipper & J. Jarvis, Collar and cuff.
428654, E. Todd, Manufacturing thin sheets of nitrocellulose.
430215, H. Maxim, Manufacture of guncotton.
430520, J. France, Manufacturing pyroxylin articles.
434287, G. Mowbray, Nitration of cotton.
434330, W. Field, Pyroxylin varnish.
436787, J. Hyatt, Waterproof collar.
439451, J. Ward, Manufacturing hollow articles from pyroxylin.
443105, G. Mowbray, Nitration of cotton.
450264, E. Todd, Pyroxylin varnish.
454281, H. Maxim, Manufacture of guncotton.
455245, H. de Chardonnet, Manufacture of pyroxylin.
455333, J. Hyatt, Thickening the edges of collars and cuffs.
458020, J. France, Indelible print or picture.
458663, H. Reichenbach & S.Passavant, Manufacture flexible photographic films
460086, W. Harvey, Artificial horn.
460629, H. de Chardonnet, Pyroxylin filaments.
465280, H. Maxim, Manufacture of guncotton.
465784, W. Schmidt, Polishing pyroxylin sheets.
458157, F. Eckstein, Composition for use as substitute for glass.
470451. A. Seher, Pyroxylin solvents.
474788, H. Maxim, Manufacture of guncotton.
474814, A. de Coëtlogon, Preparing celluloid for printing.
478851, J France, Toilet articles.
478955, W. Field, Coating cloth with pyroxylin.
479988, H. Maxim, Manufacture of guncotton.
481485, J. France, Waterproof fabric.
483701. E. Todd, Manufacturing transparent celluloid sheets.
488570, H. Miller, Die for forming plastic articles.
488630, A. Hafely, Making celluloid articles.
490195, B. Goldsmith, Pyroxylin wood enamels.
491880. W. Field, Coating cloth with pyroxylin.
494790, 494791, L. Paget, Making pyroxylin solvents.
494792, 494793, L. Paget, Pyroxylin compound.
498162, W. Field, Pyroxylin coating compositions.
498257, J. France, Machine for cutting sheets or films of pyralin.
502546, 502547, C. Borgmeyer, Pyroxylin compound.
502921, 503401, C. Borgmeyer, Pyroxylin solvent.
503402, C. Borgmeyer, Pyroxylin solution.
504064, W. Field, Manufacture of pyroxylin varnish.
504905, C. Borgmeyer, Pyroxylin solvent.
505399, G. Goldsmith & A. Merrill, Machine for making pyroxylin collars.
505462, A. Hafely & J. Redlefensen, Manufacture of celluloid boxes.
507749, L. Paget, Pyroxylin solution.
507964. C. Borgmeyer & L. Paget, Pyroxylin solvent.
508112, H. Miller, Apparatus for drying substances.
508124, H. Turgard, Denitration of nitrocellulose.
508497, F. Annison, Printing show bills with ivoryine.
513791, R. Lansing, Pyroxylin labels.
514830, 514838, R. Schüpphaus, Stabilizing nitrocellulose.
516924, F. G. Dupont, Drying nitrocellulose
517987, J. H. Stevens, Solid pyroxylin compounds.
518386, 518387, 518388, G. Zeller, Pyroxylin solvents.
526752, R. Schüpphaus, Nitrating cellulose.
528812, J. H. Stevens, Pyroxylin compound.

531158, H. de Chardonnet, Manufacturing artificial silk.
534445, 534446, H. Miller, Molding celluloid.
541899, Thiemé, Nitropentaerythrite.
542452, C. Thurber, Manufacturing celluloid articles.
543197, J. H. Stevens, Pyroxylin compound.
544924, H. Maxim, Manufacture of guncotton.
546360, J. Stevens & E. Harrison, Imitation onyx from pyroxylin.
553270, J. H. Stevens, Pyroxylin compound.
555596, G. Zeller, Pyroxylin solvents.
556380, J. Stevens, Factitious lithographic stone.
559392, F. Lehner, Artificial silk.
559823, 559824, 561624, J. H. Stevens, Pyroxylin compound.
562626, 562732, F. Lehner, Artificial silk.
563214, H. Turk, Manufacturing artificial silk.
566349, 568104, 568105, 568106, J. H. Stevens, Pyroxylin compound.
571530, R. Langhans, Decreasing inflammability of pyroxylin.
572134, 572135, J. H. Stevens, Pyroxylin compound.
573928, J. Stevens & M. Lefferts, Producing pyroxylin sheets.
578355, F. W. Oliver, Pyroxylin paper tubes.
583515, 583516, 583517, J. H. Stevens, Pyroxylin compound.
587096, A. Kennedy, Pyroxylin artificial leather.
587097, A. Kennedy, Coating leather with pyroxylin.
589870, J. H. Stevens, Pyroxylin compound.
590842, A. Kennedy, Waterproof cloth.
592877, H. Miller, Mirror construction.
593787, 595355, J. H. Stevens, Pyroxylin compound.
596662, O. Nagel, Making pyroxylin compounds.
597144, H. Goetter, Pyroxylin compound.
598648, 598649, R. C. Schüpphaus, Pyroxylin compound.
599631, H. Reichenbach, Manufacture photographic films.
600824, J. Stevens & M. Lefferts, Manufacturing pyroxylin sheets.
601927, F. G. Annison, Pyroxylin enameled paper.
602159, E. D. Harrison & C. H. Thurber, Pyroxylin imitations of mosaic.
602797, F. G. Annison, Coating fabrics with nitrocellulose compounds.
603001, W. H. Wood, Waterproofing fabric.
603526, J. R. France, Pyroxylin compounds in imitation of marble.
604181, G. Walker, Pyroxylin composition.
605185, H. E. Miller, Brush.
607415, J. E. Robinson, Forming celluloid or similar open seam coverings.
607554, J. H. Stevens, Pyroxylin composition.
608512, J. C. Dixon, Celluloid-press and vulcanizer.
608726, 608727, 609475, 610566, 610615, J. H. Stevens, Pyroxylin compound.
610630, H. E. Miller, Die for making frames from celluloid sheets.
610728, J. H. Stevens & F. Axtell, Pyroxylin compound.
610861, H. Goodwin, Photographic pellicle and process for producing same.
610953, J. H. Stevens, Pyroxylin compound.
612066, 612067, J. H. Stevens, Waterproof fabric.
612531, J. H. Stevens, Pyroxylin compound.
612553, J. H. Stevens, Waterproof fabric.
613021, Y. Schwartz, Flash-light composition.
613400, 614514, J. H. Stevens, Pyroxylin compound.
615319, J. H. Stevens, Waterproof fabric.
615446, B. B. Goldsmith, Finishing fibrous or absorbent surfaces.
617450, J. H. Stevens, Pyroxylin composition.
619037, J. R. France, Pyroxylin imitation of mosaic.
619617, H. Reichenbach, Machine for coating paper.
621360, H. Miller, Protecting glass surfaces in mirror manufacture.
621382, J. H. Stevens, Pyroxylin compound.
621433, 621434, J. H. Stevens, Transparent pyroxylin plastic composition.
622290, 622291, J. H. Stevens, Transparent pyroxylin composition.
622292, J. H. Stevens, Transparent pyroxylin composition of matter.
622293, 622294, J. H. Stevens, Transparent pyroxylin plastic composition.
625313, L. Bethisy, Decreasing inflammability pyroxylin.

625513, L. H. Bethisy, Uninflammable nitrocellulose product.
626732, J. H. Stevens, Pyroxylin composition.
622727, J. H. Stevens, Flexible skin or fabric.
630944, 630945, J. H. Stevens, Transparent flowable pyroxylin composition.
635917, C. E. Church, Manufacturing articles covered with celluloid.
641623, J. Chorley, Photographic Sensitized films.
647420, A. Luck & C. Cross, Increasing stability of nitrocellulose.
648147, F. Dupont, Dehydrating nitrocellulose.
648415, W. Krug, Substitute for horn.
650431, G. H. Stevens, Duplicating phonograms.
651364, I. Kitsee, Substitute for rubber.
654688, J. E. Thornton, Substitute for celluloid and process of manufacturing.
655706, G. C. Gillmore, Stuffing machine for manufacturing tubes and rods.
656869, W. Walden, Artificial sole leather.
657534, C. Hageman & F. Zimmerman, Manufacture of celluloid.
657535, C. G. Hageman, Manufacture of celluloid.
662961, A. Petit, Celluloid solvent material.
666975, A. Petit, Pyroxylin filaments.
667600, G. H. Stevens, Molding celluloid.
667759, D. Bachrach, Making nitrocellulose.
669330, 669331, C. Thurber, Forming hollow pyroxylin articles.
675451, E. Stoefler, Celluloid covered heel.
677012, G. Benjamin, Pyroxylin plastic manufacture by intense cold.
685551, W. Adams, Finishing leather with pyroxylin.
689536, F. Capps, Making celluloid records.
690915, H. A. Bentley, Pyroxylin coating composition.
697790, J. B. Bonnaud, Pyroxylin copal compound.
698761, N. Thurlow, Producing camphor.
699516, J. Hackenberg, Manufacture of celluloid combs.
700884, 700885, E. Zühl, Pyroxylin compound.
704082, H. C. McKay, Pyroxylin-oil varnish.
707270, 707271, K. Stephan, Producing camphene.
711875, M. and H. Miley, Color photography.
712406, F. G. Du Pont, Separating solvents from pyroxylin.
713168, J. Stevens & C. Thurber, Pyroxylin article.
714447, M. Brown, Mounting stones in celluloid.
718670, J. H. Stevens, Pyroxylin compound.
724020, F. Lehner, Spinning pyroxylin filaments.
724932, F. Dupont, Purifying nitrocellulose.
725879, J. Schmidting, Producing printing-clichés and high-reliefs.
725890, K. Stephan, Process of making camphene.
726614, F. Anthony, Nitrocellulose films.
733972, P. Kennedy, Frosting glass bulbs.
735436, R. Anthony, Nitrocellulose photographic film.
739514, E. A. Street, Insulating and waterproofing compound.
741554, R. Schüpphaus, Pyroxylin compound.
743422, D. Bachrach, Non-inflammable nitrocellulose.
743922, F. DuPont, Nitrating acids.
751076, A. Hough, Preparing starch nitrate.
758335, Meister, Lucius & Brüning, Celluloid compound.
762757, F. DuPont, Purifying nitrocellulose.
764776, J. Selwig, Nitration of cotton.
767646, I. Kitsee, Celluloid.
767944, I. Kitsee, Dissolving nitrated cellulose.
768073, A. Plaissetty, Manufacturng incandescent filaments and mantels.
770940, K. Stephan & P. Hunsalz, Process of making camphor.
778232, C. Ellis, Pyroxylin cement.
779421, 779422, F. Holmes, Nitro-starch.
783828, B. Goldsmith, Coating leather with pyroxylin.
786343, C. de Büren, Celluloid golf ball.
789249, W. Adams & H. McKay, Finishing leather with pyroxylin.
790601, K. Stephan & P. Hunsalz, Process of making camphor.
794581, D. Bachrach, Decreasing inflammability of pyroxylin.

797373, R. Riddle, Solvent for nitro-derivatives of carbohydrates.
801483, K. Stephan & P. Hunsalz, Manufacture of camphor.
801485, K. Stephan & P. Rehländer, Manufacture of camphor.
803952, G. Woodward, Non-inflammable celluloid.
811017, O. Wiederhold, Making incandescent mantles.
820351, L. Crespin, Nitrocellulose solvent recovery.
825268, L. Eilbertson, Nitrocellulose dental composition.
826165, A. Hesse, Making borneol.
826781, H. Gregory, Thin leaf of pyroxylin.
828155, H. Vittenet, Pyroxylin solvents.
831028, A. Bchal, Manufacture of celluloid.
831488, O. B. Thieme, Producing celluloid-like surfaces.
833095, N. Thurlow, Producing pinyl oxalate.
833666, E. Bergs, Producing camphene.
834460, M. Denis, Recovery of nitrocellulose solvents.
834913, P. Krais, Amyl formate lacquer.
837351, W. H. Smith, Artificial sole leather.
837700, S. Meers, Artificial leather.
841509, B. Goldsmith, Artificial pyroxylin leather.
844849, J. Bouillier, Nitrocellulose incandescent filaments.
845616, H. Chute, Producing methyl acetate.
848301, Ker, Pyroxylin films.
848357, L. Féval, Coating leather with pyroxylin.
849018, C. Philipp, Making camphor from *iso*borneol.
855869, A. Voight, Nitrating cotton.
858660, G. Close, Coating metal with celluloid.
860776, A. Voight, Nitrating cotton.
864123, F. Cossitt, Coating nitrocellulose films.
874181, E. Garbin, Utilizing waste celluloid.
874265, Volney, Drying nitrocellulose.
875062. C. Glaser, Producing camphor.
875928, A. Hough, Producing starch nitrate.
876137, A. Bischler & A. Basselli, Making camphene.
876310, J. Basler & Co., Isobornyl oxalates from camphene.
879871, B. Herstein, Nitrating cotton.
881827, E. Rouxeville, Celluloid substitute.
891033, O. Billeter, Making camphene.
893634, P. Marino, Uninflammable celluloid.
894108, L. Bethisy, Manufacturing non-inflammable celluloid.
895639, A. Hough, Producing starch nitrate.
896962, C. Weizmann, Making camphene.
898942, A. Wack, Making aromatic carbonyl derivatives.
898943, A. Wack, Making camphor.
900204, F. Raschig, Celluloid-like products.
900316, A. Shukoff, Making terpene esters.
900744, I. Kitsee, Producing cellulose compounds.
901293, J. Hertkorn, Borneol esters from turpentine.
901708, J. Hertkorn, Making camphor.
903047, E. Bers, Producing borneol esters.
906668, E. Palk & H. Basset, Pyroxylin paint.
907428, A. Verley, E. Urbain & A. Feige, Manufacturing camphol esters.
908171, A. Verley, E. Urbain & A. Feige, Oxidizing camphol.
909288, B. Goldsmith, Enameling leather with pyroxylin.
909546, C. Claessen, Stabilizing nitrocellulose.
910978, C. Weizmann, Making camphene.
914300, K. McElroy & C. Ellis, Non-combustible fiber.
923589, J. H. Smith, Nitrocellulose photographic film.
923967, C. Glaser, Producing camphene.
928235, G. de Montlord, Pyroxylin artificial patent leather.
931749, G. Gentieu, Dehydration of nitrocellulose.
934214, H. Pervilhac, Artificial lace fabric.
935603, H. Haskell, Finishing with pyroxylin.
951067, C. Crepelle-Fontaine, Solvent recovery.

938287, E. A. Taylor, Photographic film-developing machine.
939350, F. Thompson, Film-drying machine.
939835, C. Dobbs, Powder-cutting machine.
940580, C. U. Buck, Nitrocellulose explosive.
942395, G. Kraemer, Impregnating textiles with nitrocellulose.
944500, F. I. du Pont, Evaporating explosive mixtures.
945109, F. I. du Pont, Evaporating explosive mixtures.
945559, R. Linkmeyer, Spinning artificial threads.
946294, V. Vender, Making horny nitrocellulose bodies.
946475, H. Talley, Explosive-mixing machines.
946745, G. Wadsworth, Apparatus for graining gelatinous explosives.
947715, A. Lecoeur, Making cuprammonium hydroxide filaments.
948731, E. Ivatts, Drying perforated cinematograph films.
950392, H. Heydenhouse, Celluloid substitute.
951067, C. Crepelle-Fontaine, Alcohol and ether recovery apparatus.
951110, J. Gilchrist, Recovering alcohols from the lining of barrels.
951369, P. Geller, Paint and varnish remover.
951507, W. Miller, Recovering alcohols from empty barrels.
953175, O. Moh, Nitrocellulose-containing film.
953454, J. Aylesworth, Pyroxylin duplicate sound-record.
953677, S. v. Kapff, Cellulose formate.
956567, W. Caldwell, Sensitized collodion surface.
957460, E. Elsässer, Spinning cellulose solutions.
959692, M. Anthes, Collodion sensitizing solution.
960100, L. Lilienfeld, Silk-like luster, with viscose.
960939, F. E. Ives, Colored pyroxylin print.
961360, W. Lindsay, Latent pyroxylin solvent, F.P. 416843, 1910.
962036, C. Martini, Storing collodion.
962769, 962770, R. Linkmeyer, Artificial filaments from cellulose.
962788, Y. Schwartz, Photographic emulsion.
964483, T. Bolas, Producing celluloid.
970589, L. Wilson, Cellulose fims, etc.
970972, F. Thompson, Pyroxylin coated picture films.
972464, H. Mork, Producing cellulose esters.
972953, H. Walker, Pyroxylin solvent.
974285, P. Leder, Pyroxylin compound.
974900, Hudson Maxim, Pyronitrocellulose powder.
979136, C. Ellis, Paint or varnish remover.
976211, E. du Pont, Nitrocellulose explosive.
979247, G. Austerweil, Oxidizing borneol to camphor.
979280, R. Linkmeyer, Manufacturing artificial threads.
979431, C. Claessen, Nitrocellulose powder.
979560, A. F. du Pont, and J. T. Thompson, Cellulose nitrating apparatus.
979834, J. Clayton, Apparatus for manufacturing artificial silk.
980294, A. Lecoeur and P. Rudolf, Cupro-ammoniacal cellulose threads.
980648, L. Lilienfeld, Stable cellulose derivatives from viscose.
981574, E. Knoevenagel, Treating acetylcellulose to enhance elasticity and power of dyestuff absorption, F.P. 383636.
982370, L. Kurz, Nitrocellulose gold leaf.
982467, J. Brandenberger, Goffered cellulose films.
982524, J. Patty, Solvent paint and varnish remover.
985406, C. Ellis, Finish remover.

ENGLISH PATENTS RELATING TO PYROXYLIN PLASTICS.

1846, 11407, J. Taylor, Manufacture of guncotton.
1851, 13713, L. L. Bunn, Manufacture of kamptulicon.
1854, 1638, J. A. Cutting, Photographic pictures with collodion.
1855, 173, F. Prince, Nitration of paper for cartridge cases.
1855, 283, G. Audemars, Treating vegetable fibers.
1855, 309, B. Pont, Sensitized collodion plate.
1855, 745, L. Cornides, Waterproofing paper with collodion.
1855, 770, A. Rollason, Sensitized collodion films.
1855, 1765, N. Petin, Waterproofing with collodion.
1855, 1914, F. Archer, Collodion sensitized films.
1855, 1974, A. Job & E. Tomlinson, Nitrocellulose.
1855, 2112, L. Cornides, Collodion transfers.
1855, 2139, J. Clive, Producing collodion positives.
1855, 2359, A. Parkes, Waterproofing paper with guncotton.
1855, 2808, J. & D. Day, Colored collodionized glass pictures.
1856, 607, P. Bérard, Waterproofing paper with collodion.
1856, 624, W. Newton, Collodion printing; toning; fixing.
1856, 1123, A. Parkes, Coating fabrics.
1856, 1125, A. Parkes, Waterproofing paper with collodion.
1856, 1159, L. Angamarre, Collodion prints on glass.
1856, 1171, L. Cornides, Transferring designs.
1856, 2029, R. Norris, Collodion films in dry state.
1856, 2072, J. Johnston, Collodion prints on sheet iron.
1856, 2254, C. Langlois, Sensitized plates.
1856, 2256, M. Pellen, Collodion varnishes.
1856, 2871, J. Cheetham, Collodion photomechanical printing.
1857, 653, J. Cheetham & T. Southworth, Xyloidin size.
1857, 1883, P. Bérard, Manufacturing azotic cotton or pyroxile.
1857, 1884, P. Bérard, Applying concentrated collodion.
1858, 639, P. H. Bérard, Coating fabrics with azotic cotton.
1858, 1090, J. Mackintosh, Insulating telegraph wires with pyroxylin.
1858, 2849 S. Barnwell & A. Rollason, Waterproof fabric.
1858, 3066, T. de Beaurcgard, Prints on collodionized glass.
1859, 734, J. Mackintosh & G. Rhodes, Coating fabrics with collodion.
1859, 945, S. Barnwell & A. Rollason, Collodion cement.
1859, 1255, T. Henderson, Waterproofing cartridge cases by collodion.
1859, 1278, J. C. Fisher, Fusel oil shellac lacquers.
1859, 2295, J. Childs, Manufacture of artificial gums.
1859, 2789, J. Mackintosh, Waterproof fabric.
1860, 1454, M. Henry, Manufacture of pyroxylin.
1860, 2249, S. Barnwell & A. Rollason, Pyroxylin paint vehicles.
1860, 2384, G. Rhodes & J. Syme, Waterproofing guncotton composition.
1860, 2775, M. Mennons, Collodion hats and bonnets.
1860, 3024, C. Aenthoni, Sensitized plates.
1861, 955, A. Fargier & N. Charavet, Photographic printing.
1861, 974, H. Parkes, Producing ornamented metal surfaces.
1861, 1074, H. Dixon, Collodion sensitized films.
1861, 1089, T. Hooman & J. Maliszewski, Ornamenting sensitized collodion.
1861, 2140, A. Granger, Manufacture of collars and cuffs.
1862, 320, J. Tankin, Purification of cellulose nitrate.
1862, 556, H. Müller, Imitation bear skin.
1862, 1712, A. Wilson, Camera for collodionized plates.
1862, 2598, J. de Lafarge, Sensitized collodion films.
1863, 232, H. H. Hensen, Kamptulicon.
1863, 365, M. Cartwright, India rubber and parkesine.
1863, 1057, A. Rollason, Coloring paper with pyroxylin solutions.
1863, 2954, M. Risler, Sensitized collodion plates.

1864, 2143, A. Rollason, Finishing collodion photographs.
1864, 2347, A. Worthley, Collodion printing paper.
1864, 2675, A. Parkes, Coating fabrics with guncotton.
1864, 2953, L. Crozat, Photographic cotton varnishes.
1865, 72, E. Pettitt, Collodion photographs.
1865, 449, F. & L. Kossuth, Photomechanical printing with collodion.
1865, 1313, A. Parkes, Pyroxylin-coated fabrics.
1865, 2542, J. & F. J. Jones, Waterproof cartridge case.
1865, 2733, A. Parkes, Electric telegraph conductors.
1865, 3163, A. Parkes, Mixing pyroxylin and like compositions.
1865, 1102, F. Abel, Purification of nitrocellulose.
1866, 1564, A. Parkes, Manufacture kamptulicon compounds.
1866, 1592, A. Parkes, Manufacture brushes.
1866, 1746, T. F. Gillot, Xylonite varnish.
1866, 2709, A. Parkes, Manufacture parkesine.
1867, 865, A. Parkes, Coating metal rods and tubes.
1867, 1695, A. Parkes, Coating fabrics with parkesine.
1867, 2666, D. Spill, Treatment of xyloidine.
1867, 3542, E. Sintzenich, Sensitized collodion films.
1868, 536, J. A. McClelland, Pyroxylin plastic composition.
1868, 741, J. Lewthwaite, Waterproofing fabrics with parkesine.
1868, 1206, C. Brooman, Collodion carbon process.
1868, 1366, A. Parkes, Manufacture varnishes.
1868, 1614, A. Parkes, Parkesine for billiard balls.
1868, 2489, F. Walton, Collodion waterproofing mixtures.
1868, 3651, D. Blake, Plastic composition; artificial ivory.
1868, 3984, D. Spill, Coating fabrics with xyloidine.
1869, 1603, D. Blake, Coating billiard balls with pyroxylin.
1869, 2022, F. Grüne, Transfer collodion to ivory.
1869, 3102, D. Spill, Nitrocellulose compounds.
1870, 180, 787, D. Spill, Nitrocellulose compounds.
1870, 941, W. McCraw, Collodion-coated photographs.
1870, 959, H. Haymen, Pyroxylin lacquer.
1870, 1017, W. T. Henley & D. Spill, Nitrocellulose compounds.
1870, 1626, D. Spill, Insulating compounds.
1870, 2101, I. S. & J. W. Hyatt, Celluloid and like compositions.
1870, 2649, W. T. Henley & D. Spill, Nitrocellulose compounds.
1871, 1025, I. S. & J. W. Hyatt, & J. A. Perkins, Plate for artificial teeth.
1871, 2430, E. Nicholson & A. Price, Acidity in nitrocellulose.
1871, 2972, C. Townsend & A. Rollason, Waterproofing with pyroxylin.
1871, 3178, T. Foster, Artificial dentures.
1871, 3376, W. J. Gale & W. W. Boyden, Nitrocellulose compounds.
1872, 1443, G. Davey, Nitrocellulose compounds.
1872, 2625, J. Drinkwater, Flocked fabrics with zylonite.
1872, 2848, R. Courtenay, Collodion photomechanical printing.
1872, 3101, J. W. & I. S. Hyatt, Celluloid compositions.
1873, 1170, Spooner & Pyroxylin M'f'g Co., D. Bickford, Pyroxylin and collodion.
1873, 1610, A. Rollason, Coated fabrics.
1873, 2802, W. Cunliffe, Pyroxylin lacquers for metal work.
1874, 3717, W. A. Leonard, Celluloid for ignition fuse.
1875, 1739, D. Spill, Artificial tortoiseshell.
1875, 2044, 2059, F. Greening, Celluloid compositions.
1875, 2513, V. Smith, Celluloid compositions.
1875, 3766, J. F. & J. G. Mathias, Pyroxylin aluminum bronze.
1876, 2114, F. Canard, Tinting furs and skins.
1876, 2515, D. H. d'Hallium, "Etherized oil" and nitrocellulose.
1876, 3605, C. M. Jacob, Nitrocellulose compounds.
1876, 4806, J. W. Bantock, Nitrocellulose.
1877, 142, H. Lambert, Collodion sensitized films.
1877, 1601, W. B. Bishop, Plastic composition.
1877, 3703, L. A. Boule, A. P. Blin & E. L. Testu, Celluloids.
1877, 3715, I. S. Hyatt, Celluloids.

1878, 878, Celluloid Manufacture Co., Celluloids.
1878, 2484, C. M. Jacob, Treatment of thread with pyroxylin.
1878, 2519, Dynamite Manufacture Co., Making nitrocellulose.
1878, 3196, A. Lombardi, Poikilography.
1878, 3300, R. Brewster, Treating celluloids.
1878, 4711, P. Magnier, & L. Doerflinger, Denitration of pyroxylin.
1878, 5057, V. Tribouillet & A. de Besancele, Nitration of cotton.
1878, 5112, J. H. Gartrell, Molding plates of celluloid.
1878, 5255, J. Peiffer, W. McCarty, Plastic compositions containing coralline.
1879, 718, W. Jack & F. Greening, Waterproofing with collodion.
1879, 1865, H. Parkes, Nitrocellulose compounds.
1879, 1866, H. Parkes, Pyroxylin solvents.
1879, 5223, A. Clark, Collodion sensitized films.
1880, 1112, J. Reynolds, Photographic films with galena.
1880, 2162, E. Brydges, Sensitized collodion films.
1880, 2322, J. Freeman, Making varnishes.
1880, 2326, E. Batonnier & P. Michel, Ornamenting celluloid.
1880, 3753, D. Scotellari, "Enamel collodion" surfaces.
1880, 4874, N. Hart & R Bacon, Coloring celluloid.
1881, 814, J. Bonneville, Nitrosaccharose films.
1881, 983, A. Parkes, Celluloid plastic compositions.
1881, 1559, A. Pumphrey, Plain collodion films.
1881, 3072, C. Claus, Reducing inflammability of celluloids.
1881, 3376, F. Cottrell, Manufacture material to form artificial ivory.
1881, 3864, J. Hyatt, Celluloids.
1881, 4896, J. Plener, Sensitized collodion films.
1882. 24, M. Lefferts, Adding barium sulphate to spent acids.
1882, 775, R. Wall, Collodion printing paper.
1882, 1433, J. Lewthwaite, Coating with parkesine.
1882, 1849, P. Reid & J. Eastwood, Nitrocellulose in printing.
1882, 2073, T. & W. Nicholls, Celluloid.
1882, 2943, H. Aron, Celluloids.
1882, 3750, J. Gartrell, Celluloid.
1882, 4458, D. Weston, Pyroxylin filament.
1882, 6152, J. Epstein, Ornamenting leather.
1883, 24, M. Lefferts, Purifying nitrating acid.
1883, 33, S. Hahn, Imitation ivory with collodion.
1883, 983, J. Edson, Combining zylonite with leather.
1883, 1608, A. Thiébault, Sensitized collodion films.
1883, 2326, C. Moldenhauer & C. Heinzerling, Pyroxylin solvents.
1883, 2481, F. Greening, Ivory substitute.
1883, 3362, Benecke & Fischer and J. Frank, Collodion photo printing.
1883, 3930, J. Edson, Artificial ivory.
1883, 5554, J. Edson, Treating celluloids.
1884, 3029, Swinburne, "Abandoned."
1884, 3171, M. Zingler, Waterproofing with collodion.
1884, 3930, J. Edson, Manufacture artificial ivory.
1884, 6051, W. Wilson, Nitrocellulose coated paper.
1884, 7830, S. Lister & J. Reixch, Pyroxylin waterproofed yarn.
1884, 10765, L. Merriam, Artificial ivory from xylonite.
1884, 14587, H. Schwabacher, Waterproofing with collodion.
1884, 15121, T. Best, Artificial ivory from pyroxylin.
1884, 17045, J. B. Edson, Substitute for ivory.
1885, 491, W. Wilson & J. Storey, Nitrocellulose compound.
1885, 2158, E. Freely, Artificial leather.
1885, 4668, W. V. Wilson, Ornamenting wall papers.
1885, 5657, F. E. Ullstein, Coating paper with pyroxylin.
1885, 6045, H. de Chardonnet, Pyroxylin filaments.
1885, 7223, P. Justice, Artificial leather odor.
1885, 8012, W. Zeidler, Polishing celluloid sheets.
1885, 12778, R. Bernstein, Granular nitrocellulose.
1885, 16805, F. Wynne & L. Powell, Pyroxylin.
1886, 2210, H. de Chardonnet, Pyroxylin filaments.

1886, 2211, H. de Chardonnet, Pyroxylin filaments.
1886, 3645, O. Lindner, Decoration of wood, etc.
1886, 5413, E. Roese, Lacquering billiard balls.
1886, 5793, J. Journoud, Celluloid sensitized thin plates.
1886, 6167, O. Swete & W. Main, Pyroxylin electric lamp filaments.
1886, 8442, F. Greening, Substitute for varnish, ivory, etc.
1886, 9874, La Compagnie Franc du Celluloid, Designs upon celluloid.
1886, 13380, J. Brunner & C. Klary, Printing surfaces of xylonite.
1887, 405, E. Perry, Sensitized celluloid films.
1887, 2123, L. Whitefield, Designs upon textile fabrics.
1887, 2694, Gérard, Nitrocellulose containing films.
1887, 3880, M. Bouchè, Ornamenting with fish scales.
1887, 4833, T. Stevens, Embellishing fabrics.
1887, 4954, F. Crane, Applying pyroxylin lacquers.
1887, 5152, G. F. & R. I. Clark, Fusel oil cement.
1887, 5586, R. Hale, Lacquers and varnishes.
1887, 5791, R. Hale, Compound for coating metal, etc.
1887, 6022, F. Engel, Explosive pyroxylin.
1887, 6870, E. Todd, Pyroxylin lacquers.
1887, 7376, 7377, F. Crane & R. Hale, Pyroxylin lacquers.
1887, 7738, British Xylonite Co., Manufacturing xylonite for collars and cuffs.
1887, 8253, W. Field, Pyroxylin solvents.
1887, 11281, R. Hale, Treating metal surfaces.
1887, 15771, 15772, 15773, F. Crane & W. Field, Pyroxylin varnishes.
1887, 16330, C. Stoeker, Non-inflammable cellulose matters.
1888, 487, A. Orr, Nitrocellulose solutions.
1888, 5055, A. Hart, Celluloid sensitive films.
1888, 5270, H. de Chardonnet, Reduce inflammability of pyroxylin.
1888, 7044, R. Norris, Collodion sensitized plates.
1888, 13656, C. Hengst, Smokeless powder.
1888, 16465, J. France, Celluloid collars, etc.
1888, 16785, W. Adams, Collodion transferrotype paper.
1888, 17691, 17692, J. France, Celluloid compound.
1888, 18362, S. Koglund, Stabilizing nitrocellulose.
1889, 2570, 2571, J. Du Vivier, Spinning pyroxylin filaments.
1889, 5344, F. Greening, Substitute for ivory.
1889, 9879, W. Green, Imparting luster to fabrics.
1889, 10393, F. Crane, Sensitized pyroxylin films.
1889, 11665, W. Schückher, Smokeless powder.
1889, 12309, J. Williams, Photographic paper.
1889, 17496, E. A. Bluemel, Covering with celluloid.
1889, 18016, H. Haddan, Ornamenting by photography.
1889, 18090, I. Appletree, Ivory substitute.
1889, 19896, 19897, G. Eastman, Flexible collodion films.
1889, 20964, J. France, Waterproof pictures and prints.
1890, 1656, H. de Chardonnet, Pyroxylin filaments.
1890, 1897, E. Fahrig, Insulating with cellulin (nitrocellulose).
1890, 3393, E. Foxlee, Patent refused, Celluloid films.
1890, 4178, G. Balagny, Celluloid sensitized plates.
1890, 5376, H. de Chardonnet, Nitration of cotton.
1890, 5378, H. de Chardonnet, Pyroxylin filaments.
1890, 9315, E. Todd, Manufacture thin sheets nitrocellulose.
1890, 9893, J. Swan & J. Leslie, Nitrocellulose flexible films.
1890, 11945, B. Edwards, Drying sensitized films.
1890, 12684, F. Crane, Pyroxylin varnish.
1890, 13191, G. Wood, Producing positives directly.
1890, 13836, J. Aeworth, Pyroxylin coated films.
1890, 13864, A. Blandy, Waterproofing with pyroxylin.
1890, 14625, W. Schückher, Nitrated starch.
1890, 17012, G. Anders & C. Elliot, Application of xylonite.
1890, 18119, C. Brodbeek, Artificial collodion filaments.
1890, 18989, C. Wittowsky, Ornamenting pyroxylin leather.
1890, 19658, G. Eastman, Nitrocellulose camphor films.

1890, 20690, Van Winkle & E. Todd, Pyroxylin waterproofing.
1890, 20978, G. Mowbray, Manufacture of nitrocellulose.
1891, 122, H. Lister, Imitation skins of pyroxylin.
1891, 336, Zellstoff Fabrik Waldhof, Making cellulose nitrate.
1891, 376, F. Warlish, Celluloid magic-lantern slides.
1891, 1670, J. Hammond, Coating golf balls.
1891, 3342, W. Schumacher, Printing in colors.
1891, 3345, W. Field, Coating cloth with pyroxylin.
1891, 4129, H. Maxim, Manufacture of gun cotton.
1891, 5586, A. de Coëtlogan, Printing on celluloid.
1891, 6921, H. Kuhn, Sensitized films.
1891, 8823, A. McDougal, Covering lead surfaces.
1891, 10747, Selwig & Lange, Centrifugal cotton nitration.
1891, 11831, F. Lehner, Artificial filaments.
1891, 13612, Kron, Centrifugal cotton nitration.
1891, 19456, B. Goldsmith, Pyroxylin wood enamels.
1891, 19560, H. de Chardonnet, Preparing cotton for nitration.
1891, 19710, Gray, Recovery of pyroxylin solvent.
1891, 22115, H. Armitage, Coating golf balls.
1891, 22262, F. P. Werner, "Leather collodion" for brocade.
1891, 22610, A. & W. Gill, Lacquers.
1891, 24638, H. de Chardonnet, Pyroxylin filaments.
1892, 4167, W. Hazelberg, Printing on celluloid.
1892, 4169, E. Williams, M. E. Williams, O. C. Moy, Bronzing liquids.
1892, 5597, J. McDonough, Celluloid colored photographs.
1892, 7501, G. Eastman, Celluloid films.
1892, 7688, W. Cutters, Bronze paints.
1892, 9284, Cross, Bevan & Beadle, Preparing cotton for nitration.
1892, 10675, P. Hunaeus, Celluloid balls.
1892, 12732, L. Pflug, Paints for ships.
1892, 15967, Zaponing fur.
1892, 19242, Oblasser & Theryc, Cases for electric batteries.
1892, 20880, A. Durnford, Dehydrating nitrocellulose.
1892, 22736, F. Lehner, Spinning pyroxylin filaments.
1893, 3469, W. Field, Incorporating pyroxylin with oil.
1893, 3557, J. Perl, Bronzing liquids.
1893, 5504, Blair, Manufacture photographic films.
1893, 5674, M. & J. Lewinsohn, Treating furs with zapon.
1893, 6501, C. Allison, Collodion transparencies.
1893, 7277, L. Paget, Pyroxylin solvents.
1893, 7784,, L. Paget, Pyroxylin solvents.
1893, 8956, C. Pettitt, Sensitized collodion films.
1893, 15686, C. King & R. Jellicoe, Uninflammable collodion films.
1893, 19810, A. Barratt, Esher, & A. Hull, Separating films from celluloid supports.
1893, 19854, J. Page, Coating golf balls.
1983, 21455, J. Perl, Coating celluloid.
1893, 22137, L. Paget, Pyroxylin compounds.
1893, 22384, R. Schüpphaus, Stabilizing nitrocellulose.
1893, 24003, F. Lehner, Artificial pyroxylin filaments.
1893, 24638, H. de Chardonnet, Pyroxylin filaments.
1893, 24695, C. King, & R. Jellicoe, Collodion uninflammable films.
1894, 6032, F. W. Oliver, Treating cotton fibers.
1894, 6687, I. Rubie & J. MacManus, Photomechanical collodion printing.
1894, 7180, F. W. Oliver, Applying celluloid to metals.
1894, 8558, E. Cadoret, Pyroxylin coated textiles.
1894, 9261, S. F. Pichler, Pyroxylin coating of paper.
1894, 11390, F. W. Oliver, Waterproofing cartridges.
1894, 11666, F. W. Oliver, Waterproofing cartridges.
1894, 13139, S. Hahn, Nitrocellulose mother-of-pearl films.
1894, 15327, J. Perl & P. Heermann, Colored pyroxylin lacquers.
1894, 15914, A. Nobel, Nitrocellulose solutions.
1894, 17001, F. W. Oliver, Pyroxylin printing ink.
1894, 17747, F. W. Oliver, Pyroxylin paint.

1894, 19175, A. Gray, Manufacture of celluloid fabrics.
1894, 20281, Thieme, Nitropentaerythrite.
1894, 21331, J. H. Stevens, Pyroxylin compound.
1894, 21729, J. Swan, Nitrating paper continuously.
1894, 24009, F. Lehner, Artificial filaments of pyroxylin.
1894, 24235, A. Hargreaves, Nitrocellulose ammunition.
1895, 4760, A. Luck & A. Durnford, Nitrating hydrocellulose.
1895, 4769, A. Luck, Manufacture of nitrocellulose.
1895, 8215, H. Schmiedel, Waterproofing with collodion.
1895, 9624, E. Bush, Coating paper with pyroxylin.
1895, 11038, O. Knöfler, Incandescent mantles.
1895, 11821, J. Wellington, Celluloid films.
1895, 13562, H. de Grousilliers, Recovering solvents from collodion coatings.
1895, 21995, W. Reid & E. Earle, Nitro compounds.
1895, 22138, A. Baumgartner, Colored photographs.
1896, 1573, J. Wellington, Celluloid roller slides.
1896, 2568, J. Pollock, Waterproofing hats.
1896, 2595, F. Lehner, Spinning pyroxylin filaments.
1896, 4062, J. Biermann, Imitation beaver fur.
1896, 6389, M. Asselot, Manufacture of celluloid.
1896, 6858, E. Bronnert & T. Sehlumberger, Tetranitrocellulose solutions.
1896, 8069, J. B. Ker, Pyroxylin coating compositions.
1896, 10103, F. Oliver, Celluloid knife handles.
1896, 10104, Oliver, Pyroxylin packing.
1896, 10105, Oliver, Pyroxylin coated transfer paper.
1896, 10868, F. Lehner, Spinning pyroxylin filaments.
1896, 11182, W. Thompson, Waterproofing wood.
1896, 12451, E. Cadoret, Coating textiles with pyroxylin.
1896, 12693, S. Bennett, Treating fabrics.
1896, 12870, P. Meissner, Enameling with celluloid.
1896, 15852, E. Schoenfelder, & E. Kehle, Photographic prints.
1896, 19588, C. Few, Celluloid plate lifters.
1896, 22540, R. Strehlenert, Nitrocellulose solvent.
1896, 22965, F. Billing & A. Letalle, Pyroxylin coating compositions.
1896, 24132, R. Bradford & G. Rawlins, Applying pyroxylin lacquers.
1896, 25369, L. Bracher, W. Collyer & J. Cassells, Applying gold leaf.
1896, 25675, A. Furse, Pyroxylin antifouling paint.
1896, 25779, H. Helberg & G. Pertsch, Nitrocellulose solvents.
1896, 25809, Hagelberg, Attaching celluloid to cloth.
1896, 28613, D. Sutherland & W. McLaren, Nitrocellulose coated fabrics.
1896, 29261, G. Sershall, Coloring celluloid prints.
1896, 30161, M. Jolles & L. Lilienfeld, Printing paper with collodion.
1897, 633, Oliver, Celluloid thread impregnation.
1897, 758, J. Herz, Pyroxylin coated articles.
1897, 6769, Meister, Lucius & Brüning, Coating leather with sensitized film.
1897, 7330, R. Schoder, Incandescent mantles.
1897, 7867, G. Schnitzler, Producing transparencies.
1897, 7975, H. Bittner & Villedieu, Waterproofing paper.
1897, 9659, J. Hothersall, Artificial chamois leather.
1897, 10098, M. Levy, Röntgen-ray celluloid films.
1897, 11053, M. Jolles & L. Lilienfeld, Printing sensitized films.
1897, 15693 F. Du Pont, Dehydrating nitrocellulose.
1897, 17122, G. Sershall & J. Kirk, Celluloid photomechanical printing.
1897, 17302, Heberlein & Co., Treating yarn.
1897, 17602, Marsden Co., Nitrocellulose fabrics.
1897, 21543, E. Chappuis, Finishing celluloid plates.
1897, 26381, A. Plaissetty, Incandescent mantles.
1897, 27534, Bussy, Phillipe & Bussy, Pyroxylin waterproofing.
1897, 28613, Sutherland, Coating fabrics with pyroxylin.
1898, 110, W. Peel, Anticorrosive composition.
1898, 3493, W. Maekean, Incandescent burners.
1898, 3770, A. Plaissetty, Making incandescent mantles.
1898, 4445, H. Reichenbach, Nitrocellulose films in sheets.

1898, 6858, E. Bronnert & T. Schlumberger, Pyroxylin filament formation.
1898, 10432, E. Kingscote, Artificial leather coatings.
1898, 11927, L. Bethisy, Uninflammable nitrocellulose.
1898, 12867, E. Müller, Fabrics.
1898, 18002, Hengst, Explosive compound.
1898, 18697, J. Chorley, Sensitized films.
1898, 18868, A. Luck, Treatment of nitrocellulose.
1898, 20660, L. Errera, Celluloid magic-lantern slides.
1898, 22674, E. Bush, Coating paper with pyroxylin.
1898, 24750, O. Moh, A. Hesekiel & J. Grünewald, Retouching collodion films.
1898, 24768, A. Bouret & A. Verbiese, Treating vegetable fibers.
1899, 63, A. Plaissetty, Incandescent mantles.
1899, 6656, Marsden Co., Engine packing.
1899, 11181, L. Preaubert, Pyroxylin decorated leather.
1899, 12077, W. Mackean, Marking incandescent mantles.
1899, 12152, G. Macaire, Collodion transparencies.
1899, 12157, A. Behal, Manufacture of amyl formate.
1899, 12515, G. Selle, Colored collodion photographs.
1899, 13287, J. Chaubet, Celluloid.
1899, 14525, J. Chaubet, Collodion sensitized films.
1899, 15355, Meister, Lucius & Brüning, Nitrocellulose compounds.
1899, 19683, O. Raethel, Toning printing paper.
1899, 20092, Henry, Treating silk.
1899, 22085, A. Nieske, Reducing inflammability of pyroxylin.
1899, 22152, G. Macaire, Photographic films.
1899, 22186, C. Hellriegel, Imitation celluloid.
1899, 22391, E. Heusch, Covering textiles with pyroyxlin.
1899, 22867, A. Petit, Treating celluloid surfaces.
1899, 23059, O. Fulton & M. Gillard, Celluloid printing support.
1899, 23729, Grandquist, Fibres.
1899, 24561, L. Morane, Nitrating cotton.
1899, 25434, Meister, Lucius & Brüning, Celluloid.
1899, 25519, D. Lichtenberg-Madsen, Making celluloid stamps.
1900, 249, E. Spitzer, Photomechanical printing on celluloid.
1900, 2770, C. Abel, Sensitized collodion films.
1900, 5830, Haddan, Nitrocellulose.
1900, 8088, E. Vogel, Celluloid photomechanical printing.
1900, 8578, J. Paterson, W. Dickson & G. Kerr, Photomechanical collodion printing.
1900, 9087, A. Plaissetty, Decrease inflammability of pyroxylin.
1900, 9088, A. Plaissetty, Incandescent mantles.
1900, 11526, J. Ammundsen & E. Rasmussen, Imitation cork from pyroxylin.
1900, 13131, J. Goldsmith, Celluloid.
1900, 14475, L. Eilbertson, Nitrocellulose dental composition.
1900, 14754, Ampère Electrochemical Co., Making camphor.
1900, 15343, A. Petit, Pyroxylin filaments.
1900, 16332, E. de la Grange, Pyroxylin and acetone oil.
1900, 20461, F. Lehner, Denitration of pyroxylin filaments.
1900, 20733, E. Zühl, Celluloid-like products.
1900, 21535, W. Love, Artificial leather.
1901, 536, L. Joseph, Waterproofing paper.
1901, 1934, D. Lichtenberg-Madsen, Celluloid.
1901, 2339, D. Bachrach, Decrease pyroxylin inflammability.
1901, 3062, C. & C. Falkenstein, Pyroxylin coating compositions.
1901, 3861, Heberlein & Co., Threads.
1901, 4369, Soc. Petticolin, Coating celluloid sheets.
1901, 5076, J. Bousfield, Treating Nitrocellulose.
1901, 6246, A. Huck & L. Fischer, Flexible collodion films.
1901, 8063, Bonnaud, Nitrocellulose compounds.
1901, 8072, E. Zühl, Celluloid-like substance.
1901, 8301, W. Parkin & A. Williams, Rendering celluloid non-inflammable.
1901, 8728, W. Henley, & G. Sutton, Coating golf balls.
1901, 10213, E. Zühl, Celluloid-like material.

1901, 12695, H. Richter, Denitration of pyroxylin.
1901, 12863, Deutsche Celluloid Fabrik Plagwitz-Leipzig, Celluloid-like products.
1901, 16429, A. Cohn, Coating leather with pyroxylin.
1901, 18063, J. Bonnaud, Pyroxylin resin lacquer.
1901, 20253, C. Gray, Coating golf balls.
1901, 20747, A. Plaissetty, Making incandescent filaments.
1901, 22662, J. Goldsmith, Celluloid.
1902, 2036, United Fast Eyelet Co., Faced metallic articles.
1902, 2037, United Fast Eyelet Co., Eyelets.
1902, 2052, E. Kempshall, Compound fabrik.
1902, 2529, C. Stearn, & F. Woodley, Sensitized plates and films.
1902, 3177, J. B. Alliott, Centrifugal nitration.
1902, 9304, M. Pianko, Coating flesh splits with pyroxylin.
1902, 9992, Y. Schwartz, Coating paper with collodion.
1902, 11042, T. Terrell, Collodion coated incandescent mantles.
1902, 11054, E. Barlow, Pyroxylin coated eggs.
1902, 11505, B. Mills, Pyroxylin collapsible tubes.
1902, 12818, G. Fry, Non-explosive collodion film.
1902, 13112, R. Kron, Paper cellulose, strips or strings.
1902, 15545, F. Reddaway, Pyroxylin coated cloth.
1902, 17311, A. Huck & L. Fischer, Celluloid plastic composition.
1902, 17485, Miley Color Photograph Co., Coloring celluloid photographs.
1902, 19437, B. Edwards, Celluloid films.
1902, 21171, A. Hough, Starch nitrate.
1902, 21537, C. Archer, Printing sensitive films.
1902, 23445, E. Zühl, Celluloid-like substance.
1902, 24234, E. Shepard & O. Bartlett, Multicolored celluloid photographs.
1902, 24525, C. Gould, Celluloid squeegee roller.
1902, 24955, H. Lüttke, Nitrocellulose films.
1902, 25243, Sandell Films & Plates, Ltd., & W. Smalley, Celluloid films.
1902, 25821, F. Bayer & Co., Acetyl cellulose printing paper.
1902, 28284, M. Bauer, Sensitizing collodion paper.
1903, 3045, H. Ensminger, Pyroxylin and casein plastic.
1903, 3485, W. Reid, Artificial leather.
1903, 4902,. Jetter, Coating leather with pyroxylin.
1903, 5887, E. Deiss, Decorating and protecting earthenware articles.
1903, 6409, J. Selwig, Nitrating and washing cotton.
1903, 7269, F. Nathan, J. & W. Thomson, Displacement, cotton nitration.
1903, 8278, J. & W. Thomson, Nitration of cotton.
1903, 8498, G. Selle, Waterproof photographic solution.
1903, 14073, F. Nusch, Sensitized collodion films.
1903, 18599, A. & W. Clark, Collodion covered fabrics.
1903, 22299, H. Cave-Browne, Treating celluloid.
1903, 22970, D. Bachrach, Nitrocellulose compounds.
1903, 23722, F. Bayer & Co., Panchromatic collodion films.
1903, 23752, Casein Co., Casein cellulose composition.
1903, 24289, A. Forster, Metallization of fibers.
1903, 27202, Velvril Co. & Hawkins, Nitrocellulose and nitroricinolein.
1903, 27515, Cyanid-Ges. m. b. H., Explosives.
1903, 28212, W. Parkin, A. Williams & F. Casson., Rendering celluloid non-inflammable.
1904, 116, O. Schmidt, Nitrocellulose powder.
1904, 935, Akt.-Ges. für Anilin-Fab., Celluloid sensitized plates.
1904, 2167, Castle, Pyroxylin insulating compound.
1904, 4994, Meister, Lucius & Brüning, Nitrocellulose colored photographs.
1904, 5126, A. Voigt, Nitrating cotton.
1904, 5948, J. Findlay, Dinitrocellulose sensitized films.
1904, 7511, J. Selwig, Nitration of cotton.
1904, 9277, G. Woodward, Non-inflammable celluloid.
1904, 9828, H. v. Moliter, Lacquering billiard balls.
1904, 9962, Akt.-Ges. für Anilin-Fab., Opaque nitrocellulose layers.
1904, 12627, A. Hough, Starch nitrate.
1904 13485, Thompson, Producing a silky appearance on fabrics.

1904, 15629, R. Piesbergen, Pyroxylin plastic composition.
1904, 18742, P. Krais & Bradfords Dyers Assoc., Nitrocellulose in amyl formate.
1904, 20637, R. Vallette, Denitration of pyroxylin.
1904, 22381, W. Parkin & A. Williams, Rendering celluloid non-inflammable.
1904, 24246, J. Cummings, Celluloid printing masks.
1904, 24774, M. Bry, Collodion sensitized films.
1904, 26666, J. Selwig, Nitration of cotton.
1904, 27357, Saunders & Craske, Pyroxylin X-ray gloves.
1904, 27565, L. Crespin, Nitrocellulose solvent recovery.
1904, 28143, S. Lewin & A. Blumenthal, Artificial fur tails.
1905, 1686, H. Vittenet, Pyroxylin solvents.
1905, 6473, E. Hermit, Imitation cork from collodion.
1905, 6783, L. Desmarais, G. Morane & M. Henis, Collodion pump.
1905, 8297, E. Schering & Co., Camphor.
1905, 10319, G. Gerard & C. Gerard, Utilizing celluloid waste.
1905, 11512, A. Behal, Celluloid.
1905, 21505, G. Horteloup, Making artificial celluloid.
1905, 23920, H. Wolfshohl, Nitration of cotton.
1906, 2902, G. de Brialles, Nitrating cotton.
1906, 3013, G. de Brialles, Artificial cork of pyroxylin.
1906, 3449, G. Arnold, A. Scott & H. Roberts., Purifying nitrostarch.
1906, 3450, G. Arnold, A. Fox, A. Scott & H. Roberts, Nitrostarch filaments.
1906, 3486, A. Lauric & F. Bailey, Determining hardness of lacquers.
1906, 3509, S. Iseki, Incandescent filaments.
1906, 5032, C. Weizmann, Making artificial camphor.
1906, 6166, G. Gorrand, Collodion filaments.
1906, 6606, Badische Aniline Co., Borneol esters.
1906, 8167, C. Trocquenet, Non-inflammable cellulose material.
1906, 8260A, O. L. A. Dubosc, Synthetic camphor.
1906, 8356A, O. Dubosc, Synthetic camphor.
1906, 10228A, Badische Aniline Co., Making celluloid-like substances.
1906, 10407, G. Ellis, Camphor.
1906, 10798, C. Weizmann, Bornyl and *iso*bornyl ester.
1906, 10999, Chem. Fab. von Heyden, Making *iso*bornyl esters.
1906, 12630, Chem. Fab. von Heyden, *Iso*bornyl esters.
1906, 16271, Weiler-Ter-Meer, Celluloid.
1906, 16429, Badische Aniline Co., Camphene.
1906, 16676, A. Cocking, Nitration of cotton.
1906, 16725, C. Claessen, Stabilizing nitrocellulose.
1906, 17573, J. Goldsmith, Camphor.
1906, 18280, C. Weizmann, *Iso*bornyl esters.
1906, 18499, S. Meers, Pyroxylin leather.
1906, 19961, J. Basler & Co., Making *iso*bornyl oxalates.
1906, 20037, C. Claessen, Celluloid.
1906, 21171, J. Goldsmith, Camphor.
1906. 21180, J. Goldsmith, Camphene.
1906, 22783, Quinan, Drying nitrocellulose.
1906, 22810, F. Koch, Camphene.
1906, 23875A, C. Weizmann, Making pinene hydrochloride.
1906, 24830, Chem. Fab. von Heyden, *Iso*bornyl esters.
1907, 89A, A. Lumière et Fils, Making collodion filuments.
1907, 1454, J. H. Smith, Manufacture photographic films.
1907, 1595, S. Douge, Solvent recovery.
1907, 2461, J. H. Smith & W. Merkens, Collodion photographic film.
1907, 5020, H. Diamanti, Solvent recovery.
1907, 5891, P. Marino, Rendering celluloid uninflammable.
1907, 9568, M. Tortelli, Utilizing celluloid residue.
1907, 10783, Chem. Fab. Sandoz, Camphene.
1907, 10784, R. Ellis, Camphene.
1907, 14549, A. Verley, E. Urbain & A. Fiege, Making camphor.
1907, 14550, A. Verley, E. Urbain & A. Fiege, Borneol ethers.
1907, 14690, A. Liedbeck, Producing uniform nitrocellulose.
1907, 15536, R. Eisenmann, Incandescent mantle immersion baths.

1907, 16605, C. Weizmann, *Iso*bornyl esters.
1907, 17460, H. Diamanti, Denitration of pyroxylin.
1907, 21405, L. Wilson, Cellulose films, etc.
1907, 21880, Self-developing Plate Co. & T. Bolas, Manufacture of celluloid.
1907, 21946, C. Weizmann & Clayton Aniline Co., Manufacture of camphor.
1907, 22129, Chem. Fab. Heyden, *Iso*bornyl esters.
1907, 24214, M. Anthès, Reproduction of images.
1907, 24806, Schmitz & Co., Borneol.
1907, 25453, Schmitz & Co., Camphene.
1907, 27927, F. Fritzsche & Co., Oxidation processes.
1907, 28028, Schmitz & Co., *Iso*borneol.
1907, 28036, Schmitz & Co., Camphor.
1907, 28415, A. Payne, Collodion surfaces for photo-etching.
1907, 28743, S. Pianko & M. Knasler, Coating grain splits with pyroxylin.
1907, 28756, G. Pifer, Machine for coating paper.
1908, 413, O. Dubosc, Organic camphor ethers.
1908, 1682, E. Schering, Brom*iso*valeric acid esters of the borneols.
1908, 1936, P. Leemans, Acetates of borneol.
1908, 3252, J. Bamber, Three-color photography.
1908, 3750, Schmitz & Co., Camphor.
1908, 4390, W. Stevens, Celluloid.
1908, 5513, A. Boult, Obtaining camphor.
1908, 5595, L. Wilson, Cellulose films, etc.
1908, 5641, E. Donisthorpe, Photographic sensitive surfaces.
1098, 5674, Badische Aniline Co., Camphene.
1908, 7430, P. Marino, Preparing "soluble cellulose."
1908, 7629, F. Lehner, Spinning cellulose solution.
1908, 8542, G. de Brialles, Celluloid substitute.
1908, 9044, G. Whitfield, Color collodion screens.
1908, 9992, S. Assadas, Plastic substances, etc.
1908, 11248, J. Hertkorn, Making camphene.
1908, 12174, Schuhfab. Bonndorf Geb. Kriechle, Celluloid leather substitute.
1908, 14408, N. Thurlow, Making camphor synthetically
1908, 14752, J. Lutkermölle, *Iso*bornyl esters.
1908, 16114, A. Lumiere & Sons, Cinematograph film.
1908, 17432, A. Ling, T. Rendle & E. Colbrook, Nitrocellulose images.
1908, 17433, A. Ling, T. Rendle, E. Colbrook, Reproducing images.
1908, 18047, G. Austerweil, Converting borneols, etc., into camphor.
1908, 19735, F. Meyer, Nitrocellulose plastics.
1908, 20050, J. Hertkorn, Making camphene.
1908, 21839, Verein. Kunstseide Fabr., Celluloid color screens.
1908, 23192, R. Hollins, Cellulose.
1908, 24627, E. Palk & H. Basset, Pyroxylin paint.
1908, 24809, E. Branderberger, Treatment of cellulosic films.
1908, 24811, J. E. Branderberger, Treating cellulose films.
1908, 26593, H. Müller, Pyroxylin fabrics.
1908, 26682, J. Field, Celluloid sheets for balloons.
1908, 27201, H. Manissadjian, Plastic material.
1909, 376, W. C. Parken, Celluloid.
1909, 1715, J. & B. Galay, Collodion waterproof papers.
1909, 13328, E. Branderberger, Photographic films.
1909, 14039, 14950, Comp. Gen. de phonographs, cinematographes, et appareils de prècision, Making cinematograph films, F.P. 414050, 1910.
1909, 15190, 15281, E. Branderberger, Manufacture cellulose films. (F.P. 414594, 414518, 1909.)
1909, 15855, Chem. Fab. Greisheim Elektron, Celluloid-like products.
1909, 16010 J. Field, Celluloid sheets for balloons.
1909, 17009, F. Bayer & Co., Celluloid photographic supports.
1909, 18087, B. Loewe, Manufacture of artificial silk.
1909, 18694, H. Heydenhauss, A. Banhegyi & K. Glaser, Celluloid substitute.
1909, 19692, C. Martini, Storing collodion.
1909, 19772, J. & B. Galay, Coating paper with collodion.
1909, 22413, Le Crinoid Soc. Anon., Precipitating cellulose threads.

1909, 23547, M. Friedländer & P. Tuebben, Celluloid washable coating.
1909, 24556, W. Daniels, Pyroxylin web coating machines.
1909, 26657, W. Parkin & A. Williams, Non-inflammable celluloid.
1909, 27266, S. Morimura, Plastic compound. (F.P. 409661, 1900.)
1909, 28598, A. Chanard, Celluloid substitute.
1910, 1107, F. Bayer & Co., Coating threads.
1910, 3198, Bayer & Co., Cellulose esters.
1910, 3603, H. Danzer, Cinematographic bands.
1910, 4086, Akt.-Ges. Metzeler & Co., Waterproof lustrous fabric.
1910, 8769, Nobel's Explosives Co., Nitrocellulose explosive.
1910, 10227, Brit. & Continental Camphor Co.,Converting pinene into camphene, F.P. 412668, 1909.
1910, 11365, C. Claessen, Nitrocellulose powder.
1910, 13100, F. Bayer & Co., Lustrous threads.
1910, 13692, W. G. Lindsay, Manufacturer of pyroxylin compounds.
1910, 14271, F. Bayer, & Co., Cellulose.
1910, 14364, F. Bayer & Co., Cellulose compounds.
1910, 16932, F. Bayer & Co., Cellulose acetates. F.P. 418309.
1910, 17365, C. Claessen, Nitrocellulose powder. F.P. 415737, 1910.
1910, 18606, Hart, Manufacture of nitrated cellulose.
1910, 18607, Hart, Waterproofing fabrics.
1910, 19166, Hübner, Finishing artificial silk.
1910, 22309, Walker, Pyroxylin solvents.
1910, 23138, C. Späth, Celluloid films for color screens.
1910, 24707, L. Morane, Spinning artificial silk, F.P. 410267.
1910, 24980, F. Bayer & Co., Cellulose formates.
1911, 309, Verein. Glanzstoff-Fabr. Manufacture of stable cellulose solutions.
1911, 406, Courtauld & Co., and Napper, Manufacture of cellulose threads.
1911, 849, Berstein, Manufacture of artificial threads.
1911, 1022, Fox & Myers, Treating artificial threads.
1911, 1436, Soc. Anon. pour la Fabr. de la Soie de Chardonnet. Treatment of cellulose solutions.
1911, 1556, F. Bayer & Co., Manufacture of dyed cellulose acetate.

CHAPTER XV

CELLOIDIN AND THE CELLULOSE NITRATES IN MICROSCOPY

Often in histological and pathological work it becomes necessary in studying the minute structure of organisms, to obtain the same in very thin sections before they are stained, mounted and examined microscopically. Sections of hardened tissues may be cut with a razor or microtome knife after fastening the specimen to the microtome; thinner specimens can be obtained by means of the freezing microtome, but all these methods are open to the objection that unless the tissue is very cohesive, portions of it are either likely to fall out of the sections or become distorted during the shaving process and hence valueless.

The best results, therefore, are to be obtained from an embedding process which employs a substance to infiltrate thoroughly the tissues and to hold the various parts in proper relative positions, even in the thinnest sections. The two substances in common use for this purpose are paraffin and celloidin. Each has its advantages and disadvantages and neither can be employed satisfactorily to the exclusion of the other. Paraffin affords the thinnest sections, but they must be small if the best results are to be obtained, and cannot be handled properly except when fastened to the slide. Hard tissues like muscle and tissues of varying consistency, as skin, are cut with considerable difficulty by the paraffin method. Staining is also simpler than when embedding in celloidin. On the other hand, tissues of almost any consistency or size may be cut by the celloidin methods, which are also capable of furnishing very thin sections. Celloidin sections are especially good for studying the extent and relation of pathological processes, and for much of the finer histological work.

Furthermore, celloidin masses do not require the employment of heat as with paraffin, which may be an important question in the case of some very delicate structures. They do not require that the objects shall be cleared before embedding, which is a decided advantage with very large objects. The embedding material is quite transparent, a quality which facilitates greatly the orientation of the object. And they are especially indicated for very large objects, for the soaking

with pyroxylin is quite inoffensive to the most delicate elements, even when prolonged for weeks, thus insuring the harmless penetration of objects which would be completely destroyed by similar subjection to paraffin and the water bath. Finally, the mass being quite transparent, it is not necessary to remove it from the sections before staining and mounting them; it may remain as fulfilling the function of an admirable support to the tissues, holding in their place brittle or detached elements, that without help would fall to pieces and be lost. The disadvantage that the process is necessarily a long one, has been partially overcome by Gilson's rapid process, to be described. Lee[1] was able to obtain no thinner sections than 7 μ, which for much work is not sufficiently thin. Paraffin sections of 3 μ can readily be obtained.

The collodion method of embedding is due to Duval[2] although Merkel and Schiefferdecker first recomended the use of celloidin.[3]

Celloidin. The first person to prepare a purified cellulose nitrate or pyroxylin for embedding purposes was the firm of E. Schering,[4] to which they applied the name "celloidin." Celloidin is simply an ether-alcohol soluble cellulose nitrate which has been dissolved, all insoluble material removed by careful filtration and the ester recovered. It is stated that Schering nitrates absorbent cotton by means of a mixture of 23% nitric acid and 65% sulphuric acid, and after neutralizing the resulting ester and drying, the pyroxylin could be dissolved in a light-boiling solvent as ether-alcohol, commercial wood alcohol or acetone, and after allowing the solution to stand for several weeks for the insoluble matter to coalesce and the maximum precipitation occur, careful filtration through a long plate filter press with hardened filter papers, when a perfectly clear pyroxylin solution would result—a commercial lacquer of great clearness. The pyroxylin may be recovered in one of two methods, either by directly precipitating the celloidin from solution by means of a fine spray of steam or by evaporating the solution to a syrupy consistence under diminished pressure with the introduction of filtered air to guard against contamination by solid dust particles, and finally to complete dryness. In the former method the celloidin would be obtained in a disintegrated state in which solution would be much easier. Having once been in solution, it follows that, when again dissolved, no residue will remain. In microscopic work where high magnification

1. "Vade Mecum," 1905, 119. The author acknowledges indebtedness to this work for data contained in this chapter.
2. Jour. de l'Anat., 1879, 185.
3. Arch. f. Anat. u. Phys., 1882, 200; cf. F. Hochstetter, Ibid., 1886, 51; abst. Jour. Roy. Micr. Soc. 1888, 159.
4. E.P. 4771, 1877 D.R.P. 2660, 1878; U.S.P. 299857, 1884.

is applied, the most essential point is freedom from insoluble material and specks, and this can be accomplished only by careful and painstaking clarification. Any pyroxylin solution, carefully clarified, would be equally satisfactory. From the facility with which properly nitrated tissue paper may be filtered, it would seem that this might be more suitable for microscopical embedding purposes. This form of pyroxylin comes into the market in tough, gelatinous tablets,[1] chips, threads, or as a voluminous, amorphous powder. Evidently the latter has been formed by steam precipitation from a pyroxylin solution. It keeps indefinitely, dissolves rather slowly unless in powder form, and gives a slightly opalescent solution, producing an embedding mass which is firm and tough so that sections of extreme thinness may be obtained. An unfiltered pyroxylin solution, i.e., one which has not been previously dissolved and filtered, is unsuitable for histological work.

Photoxylin was introduced to microscopic technique in 1887[2] by Krysinsky and is an ether-alcohol soluble cellulose nitrate, similar to celloidin. G. Beringer[3] gives an impossible formula for its preparation from wood-pulp in which 15 times the weight of nitrous acid to cellulose is specified. It gives a clear solution in equal volumes of alcohol and ether and in all other respects deports itself like ordinary pharmacopeal pyroxylin. "Microcotton," "embedding cotton" and "histocotton" are other names for the same product. P. Mitrophanow[4] claims that it possesses an advantage over similar preparations in hardening perfectly transparent in 85% ethyl alcohol. S. Tschernischeff[5] has brought forth a collodion called "colloxylin," which is stated to give best results when 10 gm. are dissolved in 10 gm. eugenol or clove oil, with the addition of 50 cc. ether and 1 cc. alcohol. Marpmann[6] has recommended a 10% solution of celluloid in acetone, but it has been found that the camphor acts deleteriously

1. The tablet form may be prepared by dissolving pyroxylin in ether-alcohol, precipitating it with water, drying, redissolving and then filtering through a special filtering apparatus. The solution is precipitated again, and the precipitate redissolved in a mixture of ether and alcohol and filtered as before.

The clear filtered collodion is freed from ether and alcohol by distillation to such an extent that the highly viscous residual mass can be poured into molds while still warm. The gelatinous, glue-like mass obtained on cooling is cut up into lumps, each of which contains a definite weight of dry, pure cellulose nitrate.

2. Virchow's Arch. f. path. Anat. u. Hist., 1887, **108**, 217; The Microscope, 1888, 8, 183; Therap. Gaz., 1888, 380; Pharm. Centralh., 1888, **9**, 284; Zeit. wiss. Mikr. 1892, **9**, 47. Said to have been first used by Russian photographers, hence name from **photographic pyroxylin**.

3. Am. Jour. Pharm., 1888, 225.

4. Arch. Zool. Exper., 1895, **3**, 617; abst. Jour. Roy. Micr. Soc., 1896, 259.

5. Zeit. wiss. Mikr., 1900, **17**, 449.

6. Zeit. ang. Mikr., 1903, **9**, 14; abst. Jour. Roy. Micr. Soc., 1903, 558.

upon some classes of specimens, and for this reason celluloid is an unsatisfactory embedding material. Unna [1] claims that a more inelastic and hence better mass results by adding to collodion 2% oil of turpentine, sodium stearate, or preferably castor oil. The "celloidinum inelasticum" of E. Schering comprises celloidin and castor oil—a flexible collodion.

The use of cellulose nitrates in microscopy for embedding purposes is comprised in three distinct series of operations, i.e., preparation of the object for embedding, the embedding or impregation methods, and finally the subsequent treatment of the thoroughly infiltrated pieces.

Preparation of the Object.[2] The objects must first be very thoroughly and gradually dehydrated in order to cause no distortion of delicate structures upon application of anhydrous alcohol and to prevent precipitation of the celloidin upon contact with moisture. Gradual impregnation with alcohol or acetone is done by immersing the organ for varying periods—depending on its size and porosity—in solvent containing smaller amounts of water, until finally anhydrous alcohol or acetone is used. At the end of this progression, the alcohol is replaced by anhydrous ether, and this by the celloidin solution. If the objects are of a sufficiently permeable nature, they are often brought directly from the alcohol (containing a small amount of ether) into the celloidin solution.[3]

The Celloidin Bath. As in the previous steps of dehydration, the alcohol and ether must gradually be replaced with the celloidin solution in order that the relative position of the histological structures are not distorted or changed. For this reason the first impregnation should be with a celloidin solution weak in cellulose nitrate, where the object after twenty-four or more hours immersion, according to size and porosity, is placed in a collodion solution of greater density. It is in the thinner solutions, however, that most of the celloidin infiltration occurs, hence time should be given for the maxi-

1. Monats. p. Dermatol., 1900, **30**, 422, 476; Zeit. wiss. Mikr., 1901, **18**, 32.

2. L. Buscalioni and Pollacci (Atti. d. Istit. Bot. Univ. Pavia, 1902, **7**, 1; abst. Jour. Roy. Micr. Soc., 1903, 514) use celloidin in detecting cuticular and stomatic transpiration, by applying the celloidin to the surface of the plant. This sets hard and remains transparent on a dry surface, but on a moist surface becomes opalescent, thus revealing with great accuracy the points of escape of aqueous vapor from the transpiring tissue. To increase the sensitiveness to moisture cobaltous or palladium chlorides may be added to the celloidin solution. A lengthy bibliography is appended.

3. Duval (l.c.) prefers a mixture of ether 10, alcohol 1; Schiefferdecker, equal parts ether and alcohol; Tubby, (Nature, 1892, 51) advises ether 4, alcohol 1, while Fish obtains best results with acetone. The nature of the solvent or the exact proportions are of no great importance.

mum infiltration.[1] Busse[2] finds the following proportions most suitable: No. 1 bath; celloidin 10 (parts by weight) to 150 ether-alcohol mixture; No. 2, same amount of celloidin as before, the volume of solvent being reduced to 105 parts of ether-alcohol; No. 3, as before, but 80 parts ether-alcohol. A. Lee[3] prefers about 3% and 6% celloidin solutions respectively, impregnating the object in two stages only.[4] The size and porosity of the object to be impregnated should govern the time of immersion before hardening and preparing sections. Large objects, as human brains and embryos, require several months for uniform and complete celloidin infiltration.[5] A favorite method of transferring the object from the thinner to the thicker solution is to allow the thin solution to become thicker by spontaneous evaporation of the solvent in a place carefully protected from dust, making up the loss in volume from solvent evaporated by addition of thicker celloidin solution.[6]

Embedding. If the object to be embedded is of such size and shape as not to necessitate the assistance of any specially shaped mass of collodion around it in order to become attached to the microtome holder, and if the presence of such a mass is not required to orientate the object or to produce continuous series of celloidin sections, no special embedding is required. As soon as the object has become thoroughly impregnated by the thick celloidin solution, the hardening part of the process may be immediately commenced. For fine and delicate work it is essential to increase the density of the celloidin solution, until eventually the object becomes embedded in a solid block of pyroxylin. L. Neumann[7] obtains excellent results by carrying out

1. A thin solution may be taken at about the strength of the U. S. Pharmacopeal Collodium (4% by weight). The viscosity has much to do with the rapidity of penetration. In embedding, collodions of very low viscosity and thin flow should be selected Elsching (Zeit. wiss. Mikr., 1893, **10**, 443) claims to obtain solution much quicker if the celloidin be first immersed in absolute alcohol for twenty-four hours before the ether is added.

2. Zeit. wiss. Mikr., 1892, **9**, 47.

3. "Vade Mecum," 1905, 122.

4. Fish (Jour. Appl. Micr., 1899, **2**, 232) first thoroughly replaces the water with acetone and then with a 4% celloidin solution in acetone, followed by an 8% solution of the same. Stepanow (Zeit. wiss. Mikr., 1900, **17**, 185) soaks the object in, and embeds in celloidin dissolved in equal volumes of clove oil and ether, hardens in alcohol, chloroform vapor or benzene, and cuts either wet or dry. Jordan (Zeit. wiss. Mikr., 1900, **17**, 183) embeds in a mixture of celloidin with cedar oil, hardens in chloroform 5, cedar oil 1, and cuts wet or dry.

5. If the object contains cavities, these should be previously opened to insure their being filled with the collodion.

6. Apathy (Mikrotechnik, p. 122) claims that a better consistency after hardening results when the object is transferred to fresh thick solution after the preliminary celloidin impregnation. The nature of the solvent undoubtedly exerts considerable influence on the speed of infiltration, acetone being especially efficient in this respect.

7. Zeit. wiss. Mikr., 1908, **25**, 38; abst. Jour. Roy. Micr. Soc., 1908, 658.

the various stages in an exsiccator, which is air tight and contains some water-absorbent as anhydrous copper sulphate, or calcium carbide. After the celloidin has become thickened from evaporation, and has been each time replaced by a heavier solution, the mass is finally brought out into the air and the celloidin allowed to solidify by a dissipation of the solvent. By this method large pieces, as a whole brain, may be prepared for sectioning. For the reasons that the method is quicker, the infiltration more perfect, and thinner sections possible, Stepanow [1] recommends to first dehydrate in 95% or absolute alcohol, then 3–6 hours in oil of cloves, finally immersing in celloidin 3, oil of cloves 10, ether 40 and absolute alcohol 2.[2] C. Miller [3] has described a method, and R. Hamlyn-Harris [4] an apparatus for celloidin embedding. In some instances it may be more advantageous to embed on a piece of cork, pith, leather, pumice or other absorbent substance, which should first be prepared with a layer of dry celloidin. Or the mass may be attached to a celloidin matrix with amyl acetate or acetone as explained in Chapter XIV under "Celluloid Blocks." Watch glasses, petri dishes, or Esmarch plates, make convenient embedding receptacles. O. Jelinek [5] proposes the use of "stabilite" (vulcanized rubber) as an anchor for the celloidin mass.[6] Embedding in celloidin is particularly applicable to those

1. Zeit. wiss. Mikr., 1900, **17**, 185; abst. Jour. Roy. Micr. Soc., 1900, 728.

2. In the final stage it is advisable to arrange the object in the solidifying mass in the receptacle in which the final hardening is to take place. Great care must be exercised that air bubbles do not become entangled in the mass, and that the object is at all times protected from dust and dirt.

3. Jour. Appl. Micr., 1903, **6**, 2253; abst. Jour. Roy. Micr. Soc., 1903, 770.

4. Jour. Roy. Micr. Soc., 1903, 238; see also Pokrowski, Mediz Obosrenie, May, 1900; Zeit. wiss. Mikr., 1900, **17**, 331; abst. Jour. Roy. Micr. Soc., 1901, 213.

5. Zeit. wiss. Mikr., 1894, **11**, 237; abst. Jour. Roy. Micr. Soc., 1894, 753. E. C. Streeter (Jour. Appl. Micr., 1902, **5**, 1970; abst. Jour. Roy. Micr. Soc., 1902, 715) recommends marble blocks instead of wood or cork.

6. Care should be taken to have them perfectly dry. If bubbles make their appearance in the mass, they should be removed before proceeding to harden. This may be done by exposing the whole mass to the vapor of ether for several hours in a desiccator, or other tightly closed receptacle. Care should be taken that the ether, which may be poured on the bottom of the vessel, does not wet the mass. To deprive celloidin of air bubbles A. Elsching (Zeit. wiss. Mikr., 1893, **10**, 443; abst. Jour. Roy. Micr. Soc., 1894, 404) recommends cutting the original tablets as received from the manufacturers, into little blocks not over 5 mm. square. Dry at room temperature, desiccate in an incubator, lay in absolute alcohol for twenty-four hours, then dissolve in alcohol-ether in the usual manner without stirring. Another excellent method is to place the viscous solution under the bell jar and exhaust the air therefrom, when the bubbles will all come to the top within an hour's time.

For embedding delicate objects in celloidin see A. Elsching (Zeit. wiss. Mikr., 1893, **10**, 445; abst. Jour. Roy. Mikr. Soc., 1894, 404), F. Aby (The Microscope, 1891, **11**, 58; abst. Jour. Roy. Micr. Soc., 1891, 424), and C. Minot (Am. Naturalist, 1885, **19**, 828; abst. Jour. Roy. Micr. Soc., 1886, 164). S. Apathy (Zeit. wiss. Mikr., 1889, **6**, 184, 301; abst. Jour. Roy. Micr. Soc., 1890, **113**, 253) has improved on A. Florman's process (Zeit. wiss. Mikr., 1889, **6**, 184; abst. Jour. Roy. Micr. Soc., 1890, 113). For embedding vegetable objects see W. Busse (Zeit. wiss. Mikr., 1892, 8,

tissues which readily fall to pieces when in the form of sections. The cochlea is a good example, it being almost impossible to rely on obtaining a satisfactory specimen of the organ of Corti unless the tissue is cut in collodion. The advantage in this instance lies in the fact that it is not necessary to remove the embedding medium when mounting the stained specimen.

Orientation of the object is the fixation in a certain position preliminary to sectioning, or the arrangement of a series of specimens in a predetermined manner in reference to each other. As celloidin is but slightly translucent, it is seldom necessary to clarify the object as an aid to orientation. The method of Patten,[1] especially useful where a large number of small objects are to be oriented, consists in taking co-ordinate (cross-section) paper, and placing thereon at regular intervals small drops of a mixture of celloidin and clove oil. The objects to be oriented are cleared in oils of clove of bergamot, transferred singly to a drop of the collodion-clove mixture, where they are allowed to partially solidify. The collodion is hardened by the addition of a small amount of spirits of turpentine, when it is trimmed, etc., preliminary to sectioning. Hoffmann[2] takes glass slides ruled with a diamond, embedding the objects completely in large drops of collodion in oil of cloves. They are afterward hardened by benzol, toluol, xylol or turpentine. Apathy[3] arranges the objects first in gelatine, Halle and Born[4] egg albumen, while dextrin, agar-agar, tragacanth, acacia, and other gelatinous bodies have been proposed.

Hardening the Celloidin. According to A. Lee[5] "objects being

462; Bot. Centralb., 1892, **51**, 292); embryological specimens, see M. Duval (Jour. de Microgr., 1888, **12**, 226; abst. Jour. Roy. Micr. Soc., 1888, 667). W. Canfield (The Microscope, 1887, **7**, 99; abst. Jour. Roy. Micr. Soc., 1887, 680) embeds eyes in celloidin by first hardening in Müller's fluid, then in alcohol. A small incision is then made tangentially to the sclera and also on the corneal edges, the eye then put in equal parts of absolute alcohol and ether. After twenty-four hours' immersion, the organ is transferred to pure ether, next day to 1% ethereal celloidin, then finally to thicker celloidin. See also Am. Mon. Micro. Jour., 1886, **7**, 229; Ssobolew, Zeit. wiss. Mikr., 1908, **25**, 410; J. Heller, Berl. Klin. Wochensch., Apr. 24, 1899; F. Scholz, Deutsche med. Wochenschr., Mar. 16, 1905; Neumayer, Zeit. wiss. Mikr., 1908, **25**, 38; Fleischmann, Ibid., 316.

1. Zeit. wiss. Mikr., 1894, **11**, 13. See also Field and Martin, Zeit. wiss. Mikr., 1894, **11**, 11; Woodworth, Bull. Mus. Comp. Zool., 1893, **25**, 45; Denne, Jour. Appl. Micr., 1902, **3**, 888; Wilson, Zeit. wiss. Mikr., 1900, **17**, 169. For improvements on Albertin's method see F. Müller, Centralb. Allgm. Path. u. path. Anat., 1903, **14**, 671; abst. Jour. Roy. Micr. Soc., 1903, 769.

2. Zeit. wiss. Mikr., 1899, **15**, 312; 1901. **17**, 443. For labeling tissues for celloidin infiltration, see C. Thurston, Jour. Appl. Micr., June, 1900.

3. Zeit. wiss. Mikr., 1888, **5**, 47.

4. Ibid., 1896, **12**, 364. For complicated method see Eyclesheimer, Amer. Nat., 1892, **26**, 354; abst. Jour. Roy. Micr. Soc., 1892, 563.

5. "Vade Mecum," the most complete work in English on microscopical technique, 1905, 124. Enzyklopädie der Mikroskopischen Technik, 1910, contains

embedded, the treatment should be as follows: The receptacles or supports are set with the mass under a glass shade, allowing of just enough communication with the air to set up a slow evaporation. Or porcelain molds or small dishes may be covered with a lightly fitting cover. As soon as the added thick collodion (of which only just enough to cover the object should have been taken) has so far sunk down that the object begins to lie dry, fresh thick solution is added, and the whole is left as before. (If the first layer of collodion has become too dry, it should be moistened with a drop of ether before adding the fresh collodion.) Provision should be again made for slow evaporation, either in one of the ways above indicated, or—which is perhaps better—by setting the objects under a *hermetically* fitting bell-jar, which is lifted for a few seconds only once or twice a day. Frequently it has been found advantageous to set the objects under a bell-jar, together with a dish containing alcohol, so that the evaporation is gone through in an *atmosphere of alcohol*. This is especially indicated for very large objects. The whole process of adding fresh collodion and placing the objects under the required conditions of evaporation is repeated every few hours for, if need be, two or three days.

"When the mass has attained a consistency such that the ball of the finger no longer leaves an impress on it, it should be scooped out of the dish or mold, or have the paper removed if it has been embedded in paper, and be submitted to the next stage of the hardening process." [1]

There are two principal methods of permanent hardening, one in which chloroform and the other in which alcohol is used as the congealing medium. The chloroform method, which is due to Viallanes [2] is especially applicable to small objects. On account of the rapidity of the action of the chloroform, there is danger that large objects will be so completely coagulated superficially as to render their internal permeation difficult on account of the coagulated and repellant exterior. When the celloidin material is immersed in chloroform, coagulation rapidly proceeds until a mass is obtained of the consistency of wax. The length of immersion will vary from a few hours to not over three days. It has been recommended instead of directly immersing the celloidin, inclosed object in chloroform, to inclose the celloidin in a desiccator with a few drops of chloroform, the small

exhaustive articles on celloidin embedding methods, pp. 175–202, with 111 bibliographic references of year and vol., but no page.

1. If the mass is found to be too soft to readily come away from the support, it may be soaked for a day or so in 30–40% alcohol.

2. Rech. sur l'Hist. et le Dev. des Insectes, 1883, 129.

amount of vapor acting as effectually and speedily as direct chloroform immersion. Often the collodion becomes opaque upon immersion in the chloroform, but usually regains its transparency after a short time.[1] Alcohol is perhaps the more commonly used hardening medium, the best strength of which there has been considerable discussion. Due to the researches of Busse,[2] corroborated by A. Lee, it appears that 85% alcohol is probably the best strength, both as regards the cutting consistency and the transparency of the celloidin mass. However, care must be exercised to keep moist celloidin hardened in this strength of alcohol, during the cutting process, owing to the rapid evaporation of the alcohol.[3]

Cutting.[4] It is not necessary to cut the hardened blocks as soon as they have been removed from the alcohol or chloroform, simple immersion in 70% alcohol acting as an efficient preservative. They may be preserved by hermetically sealing in a veterinary gelatin capsule by pouring melted paraffin over them,[5] or in glycerol jelly.[6] G. Alexander [7] has devised a method of preserving celloidin blocks on the microtome, R. Borrmann [8] has described an apparatus for the same purpose, while J. Streiff [9] has perfected a mechanism for keeping celloidin blocks moist. In order to guard against the possibility of the celloidin being so transparent that the location of the sections in the mass may be difficult to observe, it has been recommended to stain the celloidin lightly with a basic dyestuff such as fuchsine, saffranine,

1. If the objects are sufficiently small, the preliminary hardening by evaporation may be omitted, and they may be directly immersed in chloroform, but preferably exposed to the vapor in a desiccator. The mass should first be exposed to the air until a superficial skin has formed over the celloidin surface, and then brought into the chloroform vapor. It may or may not be advisable to give a final hardening in a fresh chloroformic solution or exposure to fresh chloroform vapor.

2. Zeit. wiss. Mikr., 1892, **9**, 49. Apathy (Mikroteknik, 186) recommends "glycerin-alcohol;" other workers alcohol of 80–70% or even lower. Blum (Anat. Ans. 1896, **11**, 724) prefers weak spirit with a small amount of formaldehyde added, claiming the presence of the latter aids in the coagulation of the celloidin.

3. Hardening may also be accomplished by freezing, and cutting with a freezing microtome. After the preliminary hardening in alcohol, it is soaked in water in order to eliminate the major portion of the alcohol, dipped into acacia or tragacanth mucilage to increase adhesion to the freezing plates, and frozen. Some alcohol should be left in the tissues or the mass may be frozen too hard. Florman (Zeit. wiss. Mikr., 1889, **6**, 184) uses neither alcohol nor chloroform, but continues evaporation of the celloidin until a hard mass is obtained. The objection to this method, however, is that the excessive contraction of the celloidin in assuming a solid and rigid state is prone to cause contraction and distortion of the tissues.

4. A small, well-ground glass stoppered bottle is a simple and readily available preservative container.

5. Apathy, Zeit. wiss. Mikr., 1888, **5**, 45.

6. Apathy, Mittl. Zool. Sta. Neapel, 1897, **12**, 372.

7. Zeit. wiss. Mikr., 1896, **13**, 10; abst. Jour. Roy. Micr. Soc., 1896, 477.

8. Zeit. wiss. Mikr., 1899, **15**, 433; abst. Jour. Roy. Micr. Soc., 1899, 457.

9. Arch. f. Mikr. Anat. u. Entwick., 1900, **56**, 940; abst. Jour. Roy. Micr. Soc., 1900, 730.

methyl violet, methylene blue or victoria green. By this means the object appears much plainer by contrast. The stain may be dissolved in the alcohol used for hardening, or the volatile oil used for clearing. Care should be taken that the celloidin mass is but lightly stained. After the collodion block has been attached to the microtome,[1] the section knife should be so set that it will have the longest possible sweep. In other words, the edge of the knife should be used in the stroke. The tissue should generally be placed so that the knife will strike the tougher portion first, for in so doing there is less liability of the knife raising up and producing distorted sections.[2] P. Hickey [3] has devised an irrigating apparatus for celloidin sectioning, whereby alcohol can be dropped on any part of the knife.

Clearing and Mounting. Objects may be mounted in glycerol or Canada balsam without removing the mass. If alcohol is employed for dehydration, not over 96% strength should be used on account of the solvent action, occasionally, of absolute alcohol on collodion. Nikiforow [4] recommends equal parts of alcohol and chloroform. The clearing substance must be a non-solvent of collodion. The clearing agents most recommended are origanum oil,[5] bergamot oil, and oils of sandalwood, lavender, cedar wood,[6] clove,[7] and thyme oils, chloroform, xylol or benzine. Dunham's mixture [8] of white oil of thyme 3–4,

1. For cutting celloidin sections, a slide microtome is best, although satisfactory results are obtained with instruments such as the Cambridge rocker. A form of the latter instrument should be selected in which the razor can be adjusted obliquely. To attach a celloidin block to the microtome a piece of soft wood (not cork, on account of its elasticity) is covered with a layer of heavy collodion and allowed to dry thoroughly. A thin layer is cut from the celloidin block in order to expose a fresh surface, and this is affixed to the lacquered wood by means of a few drops of a collodion solvent,—acetone and amyl acetate being satisfactory. In order to harden the surface, the block may be immersed in alcohol or chloroform for a few hours before cutting.

2. As an illustration, in cutting a piece of tumor having a capsule, the capsulated portion should face the knife edge.

3. Jour. Appl. Mier., 1900, **3**, 994; see also G. Aubertin (Anat. Anzeig., 1897, **13**, 90; abst. Jour. Roy. Micr. Soc., 1897, 174; D. Gannett, "Whitman's Methods of Microscopical Anatomy," p. 115.

4. Zeit. wiss. Mikr., 1891, **8**, 189.

5. Ol. Origanum Cretiei is said to be preferable to Ol. Origan. Galliei. Carnoy and Lebrun (La Cellule, 1897, **13**, 71) have found oil of cajeput useful for clearing celloidin sections.

6. A safe clearing agent, gives excellent results, but acts slowly. See Jordan, Zeit. wiss. Mikr., 1900, **17**, 191.

7. Eugenol dissolves collodion, and where the eugenol is high and the caryophyllene high in oil of cloves, the latter may exert a solvent action on the collodion. Therefore clove oil should not be used for clearing sections cut in that medium without special precautions. Phenol, aniline, toluidine, xylidine and beechwood creosote are valuable for clearing celloidin sections. The volatile oils patented by J. Stevens (see Chapter IV) make excellent celloidin clearing agents. See Suchannek, Zeit. wiss. Mikr., 1890, **7**, 156.

8. Minot (Zeit. wiss. Mikr., 1886, **3**, 175) says that Dunham's mixture "clarifies the sections very readily and softens the celloidin just enough to prevent the puckering, which is so annoying with thyme alone."

oil of cloves 1; the composition of Fish [1] of white oil of thyme 1, castor oil 3; Weigert,[2] xylol 3, anhydrous phenol 1; and Eyclesheimer [3] of equal parts bergamot, cedar oil and phenol, are all used. Aniline oil clears readily but unless thoroughly removed the preparation becomes yellowish-brown from the action of the light on the oil. The color may be partially removed by soaking for twenty-four hours in chloroform.[4]

To Stain Tubercle Bacilli in Celloidin Sections: 1. Stain rather lightly in alum-hæmatoxylin. 2. Wash in water. 3. Dehydrate in 95% alcohol. 4. Attach sections to slide by the ether vapor method. 5. Carbol-fuchsine 2–5 minutes steaming. 6. Water. 7. Orth's discharging fluid (acid alcohol) ½–1 minute. 8. Wash thoroughly in several changes of water to remove acid completely and to bring back blue color to nuclei. 9. Alcohol 95% until fuchsine is entirely discharged. 10. Aniline followed by xylol; or blot and treat with xylol. 11. Xylol balsam.

The advantages of this method are: that the celloidin is colorless; the nuclei are stained blue; the rest of the tissue is colorless; the tubercle bacilli stand out in sharp contrast. It is sometimes an advantage to bring out the cell protoplasm and the intercellular substance by staining the sections, after decolorization in alcohol, in an aqueous solution of orange G or methyl orange for a few seconds.[5]

D. Cristina [6] describes a method of celloidin section mounting in which the cut and stained sections are transferred to 94% alcohol for a short time, from which reagent they are taken by strips of blotting paper and transferred to specially prepared glass slides. The slides are previously spread with glycerinated albumen (egg albumen 5, neutral glycerin 1). The paper strip with the sections attached is then laid, section side down on the prepared surface of the slide, other dry strips being laid over it, and gently pressed down with the finger. The sections are said to remain firmly fixed.[7]

The "Newer" Celloidin Method, introduced by E. Meyer [8] con-

1. Proc. Am. Mic. Soc., 1893; W. Russe, Zeit. wiss. Mikr., 1892, **9**, 49.
2. Zeit. wiss. Mikr., 1886, **3**, 480.
3. Am. Nat., 1892, **26**, 354; Jour. Roy. Micr. Soc., 1892, 565.
4. Van Geison, Am. Mon. Mic. J., 1887, 49; Jour. Roy. Micr. Soc., 1887, 519.
5. See R. T. Williamson, "The Therepeutic Uses of Celloidin," Brit. Med. Jour., 1896, **1**, 968.
6. Zeit. wiss. Mikr., 1904, **22**, 99; abst. Jour. Roy. Micr. Soc., 1905, 774.
7. The method of P. Argutinsky (Arch. f. Mikr. Anat. u. Entwickl., 1900, **55**, 415; abst. Jour. Roy. Micr. Soc., 1900, 403) of sticking celloidin sections on slides consists in first carefully cleaning the slide from grease by alcohol and heat, and when dry Mayer's glycerol-albumen is placed on each slide and spread in a thin layer. The sections are cut in 70% alcohol, carefully straightened out and removed with a dipper to the slide and then covered with alcohol.
8. Biol. Centralb., 1890, **10**, 508.

sists in soaking the celloidin blocks in glycerol for twenty-four hours before cutting. Bumpus[1] also advises clearing before cutting, using oil of thyme as the clearing agent. After clearing, the under surface of the mass is washed in ether, cemented with celloidin to a block for cutting, the whole being hardened by immersion for a few minutes in chloroform. The knife is wetted with the clearing oil, the latter being used for covering the exposed surfaces of the object after each cut.

Gilson's Rapid Process. This process, taken from Lee's "Vade Mecum," is as follows: "The object is dehydrated, soaked in ether, and brought into a test tube with collodion, or thin celloidin solution. The tube is dipped into a bath of melted paraffin, and the collodion allowed to boil (which it does at a very low temperature) until it has become of a syrupy consistence. It should be boiled down to about one-third of its volume. The mass is then turned out, mounted on a block of hardened celloidin, and the whole hardened in chloroform or in a mixture of chloroform and cedar oil for about an hour. It is then cleared in cedar oil (if hardened in pure chloroform; special clearing will not be necessary if it has been hardened in the mixture). It may now be fixed in the microtome and cut, using cedar oil to wet the knife, and cover the exposed surface of the object after each cut.

"It will be observed that this process is very much more rapid than the old process, in two ways—the celloidin bath, being given warm, is greatly abridged; small objects can be duly infiltrated in an hour, where days would be required by the old process. The hardening is also much more rapid than hardening by alcohol, which requires at least twenty-four hours. As collodion boils at a very low temperature, very little heat is required, and there is no risk of the tissues suffering on that head."

A. Lee has greatly improved this process by introducing a dry cutting method in place of the usual cutting with a continual wetting with alcohol. He says: "Infiltrate with collodion or celloidin either by Gilson's process, or by soaking in the cold in the usual way. This is a much slower process, but does not take up more of the worker's time, as the specimens require no attention whilst in the bath. Embed as usual, either directly on the holder of the microtome, or in a paper tray or a water-color mold or the like. Harden in vapor of chloroform for from one hour (generally sufficient for small objects) to over night. This is done by putting the object (definitively embedded in the final thick solution, but without any preliminary hardening in the air) into a Steinach's sieve-dish or into a desiccator, on the bottom of

1. Am. Naturalist, 1892, **26**, 80; see Gage, Trans. Am. Micr. Soc., 1896, **17**, 361; Fish, Proc. Am. Micr. Soc., 1893, 179.

which a teaspoonful of chloroform has been poured. (The objects may remain for months in the chloroform vapor if desired.) As soon as the mass has attained sufficient superficial hardness, it is, of course, well to turn it out of its receptacle, and turn it over from time to time, in order that it may be equally exposed on all sides to the action of the vapor. When fairly hard (it is not necessary to wait until the mass has attained all the hardness of which it is susceptible) throw it into Gilson's mixture. This should be at first a mixture of one part of chloroform with one or two parts of cedar oil. From time to time more cedar oil should be added, so as to bring the mixture up gradually to nearly pure cedar oil. As soon as the object is cleared throughout the mass may be exposed to the air, and the rest of the chloroform will evaporate gradually. *Cut dry*, the cut surface will not dry injuriously under several hours. The cutting quality of the mass is often improved by allowing it to evaporate in the air for some hours.

"The hardening may be done at once in the chloroform and cedar-wood mixture, instead of the chloroform vapor."

Celloidin=paraffin Embedding Method. To combine the advantages which infiltration in celloidin and paraffin offer, a method of combining both is recommended. Preparations that have been embedded in celloidin and hardened in 80% alcohol are placed for about twelve hours in 90% alcohol, from which they are transferred to a mixture of equal parts of oil of origanum, or thyme and 80% alcohol. They are then immersed for a short time in the pure oil, then in a mixture of oil and xylol, and finally in pure xylol. From this point the regular paraffin infiltration method is followed, care being taken that the pieces remain in the various fluids for the shortest possible time, in order that the celloidin may not become brittle.

Very thin sections may be obtained by painting the cut surface with a thin layer of very dilute celloidin, which hardens and gives greater consistency to the surface tissue. This treatment is useful in the combined celloidin-paraffin method as well as with the paraffin alone. In Kultschitzky's method [1] the object after leaving the collodion bath is soaked in oil of origanum. It is then brought into a mixture of origanum oil and paraffin heated to not above 40° and lastly into a bath of pure paraffin. Ryder [2] substitutes chloroform for the origanum. Ide [3] embeds in a tube by Gilson's process, the collodion being boiled forty minutes, then brought for fifteen minutes

1. Zeit. wiss. Mikr., 1887, **4**, 48; abst. Jour. Roy. Micr. Soc., 1887, 845.
2. Queen's Micr. Bull., 1887, 43; abst. Jour. Roy. Micr. Soc., 1888, 512.
3. La Cellule, 1891, **7**, 347; 1892, 8, 114.

(for small objects) into chloroform heated to 30° containing one-fourth part of paraffin, then for ten minutes into pure melted paraffin.[1] [2]

Serial Sections by the Celloidin Method may be conveniently divided into (*a*) albumen method, (*b*) bergamot oil method, and (*c*) ether method. In the albumen method Jordan [3] coagulates the albumen substratum by heat by means of which the celloidin sections are attached to the slide, care being taken, however, that the sections are covered with a layer of tissue paper to prevent the sections drying from the heat. Argutinsky,[4] J. Tandler [5] and H. Bumpus [6] have devised modifications of this process. Either Mayer's albumen, albumen dissolved in water and sodium betanaphthol or sodium benzoate or salicylate added as a preservative are satisfactory. F. Dimmer [7] uses gelatin instead of albumen. In the bergamot oil method which has been developed by Apathy [8] and the later simplifications,[9] long series of celloidin sections are prepared by dehydrating the surface of

1. Field and Martin (Bull. Soc. Zool. de France, 1894, 48) make a solution of dry celloidin in a mixture of equal parts absolute alcohol and toluene, of about the consistency of clove oil. This solution is saturated with paraffin, added in shavings at a temperature not exceeding 23°. The tissues are prepared by soaking in some of the mixture of alcohol and toluene, and are then penetrated with the celloidin-paraffin solution. The mass is hardened in a saturated solution of paraffin in chloroform or in toluene, and finally embedded in paraffin in the usual way. See also modifications by Sabussow, Mitth. Stat. Neapel., 1896, **12**, 353; Meyer, Ibid., 1901, **14**, 290; Mitrophanow, Arch. Zool. Exper., 1906, (3), **3**, 617; A. Brechner, Zeit. wiss. Mikr., 1908, **25**, 29, 421; abst. Jour. Roy. Micr. Soc., 1908, 775.

2. V. Dahlgren (Jour. Appl. Micr., 1898, **1**, 97; abst. Jour. Roy. Micr. Soc., 1898, 489) combines the paraffin and celloidin method for embedding ova and embryos of amphibia, by infiltering the objects with celloidin in the usual way and then immersing in a large quantity of chloroform for twenty-four hours. They are then transferred to a bath of equal parts of chloroform and cedar oil, and after twenty-four hours are placed in the water bath in paraffin of the melting point that is to be finally used for embedding them. For solubility of celluloid and paraffin in acetone see Marpmann, Apoth. Zeit., 1907, **22**, 483.

3. Zeit. wiss. Mikr., 1898, **15**, 54.

4. Ibid., 1900, **17**, 37.

5. Ibid., 1897, **14**, 36; abst. Jour. Roy. Micr. Soc., 1897, 447.

6. Am. Naturalist, 1892, **26**, 80; abst. Jour. Roy. Micr. Soc., 1892, 438.

7. Zeit. wiss. Mikr., 1899, **16**, 44; abst. Jour. Roy. Micr. Soc., 1899, 448; J. Kingsley (Jour. Appl. Micr. 1899, **2**, 325; abst. Jour. Roy. Micr. Soc., 1899, 448) first hardens the collodion in alcohol and when hardened places in a mixture of phenol 1, xylol 3, the sections being cut with a razor flooded with phenol-xylol. W. Rubaschkin (Anat. Anzeig., 1907, **31**, 30; abst. Jour. Roy. Micr. Soc., 1907, 633) uses albumen-glycerol in the proportion 2 : 1 for sticking sections to the slide. While cutting, the sections are temporarily arranged on the back of the knife to the handle and when a sufficient number have been thus collected are removed to the slide. It is important that every section should be quite flat and without creases. The sections may easily be smoothed out by means of a brush and gentle pressure. When satisfactorily arranged on the slide, they are covered with a mixture of equal parts clove oil and aniline. In 3–5 minutes the sections will have become quite clear and transparent, the oil is poured off, the slide washed with 90% alcohol, in which they are kept until required. For certain defects in the above, see W. Dantschakoff (Zeit. wiss. Mikr., 1901, **25**, 32; abst. Jour. Roy. Micr. Soc. 1902, 658).

8. Mitth. Zool. Stat. Neapel., 1887, **7**, 742; abst. Jour. Roy. Micr. Soc., 1888, 671; Zeit. wiss. Mikr., 1888, **5**, 45; abst. Jour. Roy. Micr. Soc., 1888, 836.

9. Apathy, Mikroteknik, p. 127.

the celloidin block immediately previous to, and during the act of sectioning and removing the section to a strip of paper kept moist with bergamot oil. The bergamot oil appears to aid in flattening out the sections. In another method the microtome knife is first coated with vaseline, and then wetted with 70–80% alcohol. The sections are drawn up on the knife blade with a needle as fast as they are cut and arranged in rows so that the celloidin overlaps or at least touches. When a series is thus obtained, it is painted over with dilute collodion solution, the latter allowed to dry, when the entire series, as one piece, may be lifted from the microtome knife, stained, etc.[1] Darkeschwitsch has recently suggested a comparatively simple method for preparing a series of celloidin sections.[2]

In Obregia's method [3] the slides are first coated with an alcoholic solution of sugar and dextrin, dried slowly until the surface is just sticky to the finger, paraffin sections arranged and heated for a few minutes at a temperature just above the liquefying point of the paraffin, the latter being then removed by some solvent as benzol or xylol. The xylol is replaced by alcohol and this in turn by celloidin solution in ether-alcohol. The slides are allowed to evaporate until the celloidin has solidified, and then detached by immersing the celloidin in

1. If the sections are to be stained, the slide is removed from the bergamot oil, softened in ether-alcohol vapor, immersed in 90% alcohol, and then stained in any alcoholic solution of 70% strength or over. If an aqueous dyestuff is to be used for staining, the celloidin sections are first attached to each other by means of ether vapor, when the entire series may be removed in a single mass and stained by immersion in water containing the dyestuff.

2. A glass cylinder of about the diameter of the specimen to be cut, and without a neck, is filled with alcohol. A series of pieces of filter paper are cut to fit the neck of the bottle, numbered and wet with alcohol. Each section is removed from the microtome by pressing against it a wetted filter paper circle. After inverting the paper so that the section is uppermost, it is deposited in rotation in the bottle, the series forming a column of sections between numbered papers. In this manner the sections may be kept indefinitely. When ready to stain, the alcohol is poured off, and replaced by staining solution. They are then mounted in any convenient manner.

With Weigert's method (Zeit. wiss. Mikr., 1885, **2**, 490; abst. Jour. Roy. Micr. Soc., 1886, 349), designed especially for the central nervous system, the manipulation is somewhat tedious, but entirely satisfactory. The process depends upon transferring as cut, the specimens to narrow strips of tissue paper. This is best done by cutting each section and immediately arranging in proper position close to the knife. Then a strip of tissue paper twice the width of the section is gently placed upon it, and the sections withdrawn from the knife, the success of the process depending in a great measure upon having little alcohol upon the knife, otherwise the specimen will not stick. The strips of paper when full are kept moist by placing on a blotting paper wet with alcohol in a shallow dish, the whole being covered with tissue paper. When all the sections have been cut, each strip in turn is coated with a thin film of celloidin as follows: A strip of sections with the specimen side downward is covered with a thin celloidin solution. This fastens the sections, when the paper can be removed. A thin celloidin coat is flowed over the sections and the latter allowed to drain. They are then stained.

3. Neurol. Centralb., 1890, **9**, 205; Gulland, Jour. Path., Feb., 1893.

water, forming a film which can be further stained, cleared and otherwise treated as desired. For large sections see Blochman [1] and the collodion-gelatin-process of Giacomini.[2]

Collodionization of Sections is a term which has been applied to that series of treatments whereby certain structures are strengthened which are so brittle by nature as to be prone to crumble and disintegrate when submitted to the usual methods preparatory to microscopical study. Structures like ova are frequently so delicate and friable as to resist all attempts to mount them in their entirety. This is especially so with the ova of Phalangida. This fragility may be overcome by covering the exposed surface of the object with a celloidin solution before each section, which serves to bind together the structures in a very satisfactory manner. When applied to tissues not especially delicate, it enables thinner sections to be cut than would otherwise be possible. The original method of adding a drop of celloidin solution to each section before cutting has the two defects of the softening action of the celloidin solvents on the paraffin, and the fact that the collodion upon drying shows a tendency to roll and curl.[3] Mark [4]

1. For Blochman's modification of Weigert's process, see Zeit.wiss. Mikr., 1897, 189; Ino Kubo, Archiv. Mikr. Anat. u. Entwickl., 1907, **70**, 1; abst. Jour. Roy. **14**, Micr. Soc., 1907, 496. A complicated modification of Weigert's method, adapted only for use with Strasser's automatic ribbon microtome has been described by Strasser, Zeit. wiss. Mikr., 1886, **3**, 346; also Ibid., 1889, **6**, 154; 1890, **7**, 290, 304; 1892, **9**, 8; 1895, **12**, 154; 1897, **14**, 139; 1903, **19**, 333, 337. For the "Ether Method" see Summers (Amer. Month. Micr. Jour., 1887, 73) and Gage (Proc. Amer. Soc. Micr., 1892, 82). For Schallibaum's collodion method see Arch. f. Mikr. Anat., 1883, 565, and Rabl (Zeit. wiss. Mikr., 1894, **11**, 179); Field and Martin (Bull. Soc. Zool. France, 1894, 48); Gallemaerts (Bull. Soc. Belge de Micr., 1889, **15**, 56); and Wintersteiner (Zeit. wiss. Mikr., 1893, **10**, 316).

2. Gaz. del Clinische, Nov., 1885; abst. Zeit. wiss. Mikr., 1885, **2**, 531.

3. Jordan (Zeit. wiss. Mikr., 1898, **15**) prevents curling by the addition of 5 drops cedar oil to each 15 cc. celloidin solution. Apathy (Mikroteknik, p. 183) unrolls celloidin sections by immersing them in warm water.

4. Amer. Naturalist, 1885, 628; abst. Jour. Roy. Micr. Soc., 1885, 738; states "Have ready a very little fluid collodion in a small bottle, through the cork of which passes a small camelhair brush, which just dips into the collodion with its tip. The collodion should be of such a consistency that when applied in a thin layer to a surface of paraffin it dries in two or three seconds without leaving a shiny surface. Collodion of this consistency does not produce a membrane on the paraffin in drying, and therefore has no tendency to cause sections to roll. It has further the advantage that it penetrates to a certain depth below the surface of the preparation, and fixes the deeper layers of it in their places. The collodion must be diluted with ether as soon as it begins to show signs of leaving a shiny surface on the paraffin.

"Take the brush out of the colloidon, wipe it against the neck of the bottle, so as to have it merely moist with collodion, and quickly pass it over the free surface of the preparation. Care must be taken not to let the collodion touch the vertical surfaces of the paraffin, especially not the one which is turned toward the operator, as that will probably cause the section to become stuck to the edge or under the surface of the knife. As soon as the collodion is dry, which ought to be in two or three seconds, cut the section, withdraw the knife, and pass the collodion brush over the newly exposed surface of the paraffin. While this last layer of collodion is drying, take up the section from the knife and place it with the collodionized

has described a method that has found acceptance with a large number of workers in this field. In order to obviate the tendency of ether to soften and dissolve paraffin, Henking [1] uses a saturated solution of paraffin in absolute alcohol. In order to effectually fill any cavities in the specimen, Rabl [2] keeps the temperature nearly 100° by means of a water bath. This also has the additional advantage of preventing the sections from curling. Heider [3] adds an ethereal solution of mastic to collodion, diluting the mixture with ether until quite thin. C. Regaud [4] has described a method of "collodionage" of cells (blood, semen, etc.).

Celloidin Injection Mass. In the formation of injection masses, celloidin plays an important part, the discovery of which is due to Schiefferdecker. Very small blood vessels and capillaries are easily penetrated with collodion masses, the viscosity and elasticity of which protects them from injury during the injection process. Its application is not difficult, and by using a very soluble collodion of great fluidity, shrinkage due to evaporation does not become a serious drawback. The arterial and venous system may be differentiated by employing celloidins with different coloring matters in suspension.

Asphalt Celloidin Injection. Powdered asphalt is placed in ether until dissolved, the colored ether decanted and the celloidin dissolved in the latter, which is then ready for use.

Red and Blue Masses. It is often desirable to color the arteries red and the veins blue, and a pigment, rather than dyestuff, is selected on account of the fact that the solid particles of pigment do not penetrate the arterial and venal walls as would be possible with dyestuffs, and hence finer work is obtainable. Prussian blue or a red lake (as madder lake) is first ground in a small amount of rectified fusel oil, and this incorporated with the celloidin solution. Vermilion is also said to be a suitable red. The amount of coloring matter added should be as little as possible, as the solid particles render the mass brittle upon drying. If a fine injection mass is required, the pigment should be double ground in a paint mill, as indicated in Chapter IX. The

surface downward on a slide prepared with fixative of Schällibaum. Then cut the second section, and repeat the manipulations just described in the same order. A skillful operator can cut ribbons of sections, collodionizing each section."

1. Zeit. wiss. Mikr., 1886, **3**, 478.

2. Ibid., 1894, **11**, 170. For Lendenfeld's intricate modification see Ibid., 1901, **18**, 18.

3. Abst. Zeit. wiss. Mikr., 1892, **8**, 509. For the celloidin method for hard plant tissues, see A. Plowman, Zeit. wiss. Zool., 1905, **78**, 552; abst. Jour. Roy. Micr. Soc., 1905, 262.

4. Zeit. wiss. Mikr., 1904, **21**, 23; abst. Jour. Roy. Micr. Soc., 1905, 589.

For celloidin decalcification and desilication of dental enamel, see C. Bodecker, Zeit. wiss. Mikr., 1905, **22**, 190; 1908, **25**, 21; abst. Jour. Roy. Micr. Soc., 1905, 764; 1908, 774.

syringe used should be first cleaned with ether or a solvent of celloidin, care being seen that the piston does not fit the syringe-tube too closely. The injection should be made as quickly as possible to guard against thickening of the solution by precipitation of the pyroxylin, from osmosis of moisture through the capillary walls.

The injected organ is first placed in hydrochloric acid, diluted, according to the danger of shrinkage, in which it is left until the tissues are sufficiently softened so that the tissues may be entirely cleansed from fragments of clotted blood by washing with a saline solution. The preparation may be permanently preserved either by mounting in glycerol, or if it be sectioned, by the previously described method of celloidin embedding.[1]

Celloidin or Collodion Sacs were first widely known through the researches of Metschnikoff, Roux and Salembeni,[2] during their investigations on the spirillum of Asiatic cholera, although Morpurgo and Tirelli[3] made some use of them three years previously. Nocard and Roux[4] on their investigations on the cause of pleuro-pneumonia in cattle, followed by Vincent,[5] Nocard,[6] F. Novy,[7] C. Gorsline,[8] Crendiroupoulis and Ruffer,[9] S. Grubbs and E. Francis,[10] Rodet and Gruechoff,[11] Levy,[12] and S. Bigelow[13] alone and with A. Gemberling[14] are among those who have successfully used cellulose nitrate sacs in utilizing the phenomenon of dialysis either bacteriologically or for pure physicochemical work. At the present time the growing of cultures in collodion sacs in the peritoneal cavities of animals has become a common procedure in all bacteriological laboratories where it is desired that the culture in its growth shall be raised in virulence through the action of the nutrient body fluids, and yet be protected from the influence of

1. For collodion infiltration of plant tissues in botany, see M. Thomas, Proc. Am. Micr. Soc., 1890, 123; abst. Jour. Roy. Micr. Soc., 1891, 423. Bellarminow (Anat. Anzeig., 1888, **3**, 650; abst. Jour. Roy. Micr. Soc., 1889, 151) has found that sections of the eye injected with Berlin blue can be decolorized with eau de Javelle (chlorine water). For decoloration of orcein stained celloidin preparations see H. Jordan, Zeit. wiss. Mikr., 1898, **15**, 53; abst. Jour. Roy. Micr. Soc., 1898, 600. See also Zeit. wiss. Mikr., 1896, **13**, 302; abst. Jour. Roy. Micr. Soc., 1897, 176.
2. "Toxine et Antitoxine Cholerique," Ann. de l'Inst. Pasteur, 1896, **10**, 261.
3. Arch. ital. biol., 1893, **18**, 187.
4. Ann. de l'Inst. Pasteur, 1898, **12**, 240.
5. Ibid., 1898, **12**, 787.
6. Ibid., 1898, **12**, 564.
7. "Laboratory Work for Bacteriology," 1899, 499.
8. "On the Preparation and Use of Collodion Sacs," Contributions to Medical Research, 1903, 390.
9. Compt. rend. soc. Biol., 1900, **52**, 1109; Brit. Med. Jour., 1900, **2**, 1305; abst. Jour. Roy. Micr. Soc., 1901, 98.
10. Bull. 7, Hygienic Lab., U. S. Marine Hosp. Service, May, 1902.
11. Compt. rend. soc. Biol., 1900, **52**, 965.
12. Jour. Infect. Dis., 1905, 201–248.
13. J.A.C.S., 1907, **29**, 1675.
14. J.A.C.S., 1907, **29**, 1576.

the body cells and phagocytes. Unlike other dialyzable bodies, the cellulose nitrates are unaffected by the gastric and intestinal juices, hence the soluble bacterial products can osmose through the celloidin membrane and thus be absorbed by the tissues, while at the same time the animal fluids can pass within and serve as nutriment for the bacteria. This, therefore, affords a ready means of exalting virulence in bacteria, and of producing agglutinative and other phenomena, without great difficulties being thrown in the way.

As stated by Novy, the earlier methods of forming collodion sacs practiced by the French investigators were both laborious and time consuming, and he has evolved a much simpler method [1] The process of manufacture published by J. McCrae in 1901,[2] in which gelatin capsules are coated with collodion U. S. P. is both simple and inexpensive, the resulting sac being mounted on glass tubing as prepared for final use.[3] McCrae's method, as improved upon by N. Harris,[4] is to attach a piece of small glass tubing to the smaller end of a veterinary gelatin capsule,[5] the capsule dipped in celloidin solution, dried, and if desired, reinforced by one or more additional coatings. The sac is

1. Ibid., 1578. "A small orifice of one or two mm. in diameter is blown in the bottom of a tube of the diameter of the sac which it is desired to make. This hole is first closed with a layer or two of collodion, care being taken not to allow any collodion to go through the opening to the interior of the tube. This closing is conveniently accomplished by touching the bottom of the perforated tube with a cork carrying some collodion solution, allowing time for a portion of the solvent to evaporate, touching again, and so on until the closure is of the desired thickness. A flask, or cylinder, containing the collodion solution is tipped so that the tube mold, or 'roll-tube' may be inserted and may be rotated just touching the surface of the collodion for a length somewhat in excess of that of the sac to be made. The tube thus coated with collodion is taken out of the flask and a short time is allowed for some of the solvent to evaporate. It may then be inserted in the flask and rotated once more to give it another coat, and these operations may be repeated until the collodion membrane has acquired almost any desired thickness. But it is advisable to use a collodion of such consistency that one insertion and rotation suffices. When the coating has 'set' and does not stick to the finger, the tube is plunged into water and water is poured into the interior. If the collodion is immersed in water too soon, it becomes white and opaque, somewhat brittle and not durable. If the immersion is too long delayed, the collodion is apt to adhere to the tube so firmly that it is difficult to remove it without tearing. The proper interval, varying between two and fifteen minutes, according to the consistency of the original collodion, is easily learned in two or three trials. By blowing into this tube and simultaneously pulling and twisting the membrane gently, the water is forced through the perforation and between the collodion membrane and the tube. With moderate care it is not at all difficult to detach the very transparent and tough collodion sac. There appears to be almost no limit to the size of the sacs which may thus be made. Novy and Gorsline's sacs for their striking demonstrations of the phenomena of dialysis were frequently 40 cm. long by 2–3 cm. in diameter.

"Dialysis occurs with great rapidity through such sacs and the whole process can be watched without the least difficulty because of their transparence."

2. Jour. Exper. Med., 1901, **6**, 635.

3. See J. Matthews, Jour. Physical Chem., **14**, 281.

4. Centralb. f. Bakt., 1902, **32**, 74; Bull. Johns Hopkins Hosp., 1902, **13**, 112; abst. Jour. Roy. Micr. Soc., 1902, 502.

5. Parke Davis & Co.'s Veterinary, No. 12.

filled with broth, sterilized in an Arnold steam sterilizer, and then inoculated.[1] After testing for tightness it is ready for insertion into the peritoneal cavity. The methods of W. Frost[2] and W. Harvey[3] contain important modifications, the latter hardening the celloidin coating by immersion in chloroform.

Physical Properties of Collodion Membranes. The usefulness of collodion membranes in osmotic and other physical experiments is becoming more fully appreciated by chemists and physicists. As far back as 1855, A. Fick[4] recognized the usefulness of collodion membranes in the study of diffusion phenomena; W. Schumacher[5] devised a method of making closed collodion sacs, with which he carried out various experiments; Baranetzky,[6] who has published a lengthy article on the subject, worked exclusively with collodion solutions, his results showing that cellulose nitrate films are distinguished from animal membranes, parchment paper or cellulose by a diminished permeability for saline solutions. Gorsline[7] records that peptone, albumose, albumin, starch, dextrin and certain enzymes in from 0.5–1% solutions all dialyzed through a collodion membrane in less than twenty-four hours at a temperature of 35° in quantities sufficient to be readily recognizable. Malfitano[8] in filtering a colloid through collodion found that the major portion had refused to dialyze. Bierry and Giaja[9] made the discovery that pancreatic secretion having passed through a collodion membrane refused to hydrolyze starch or maltose,

1. The gelatin is removed by filling the capsule with water by means of a fine-bore pipette, boiling for a couple of minutes in water, sucking out the dissolved gelatin and rinsing the sac with hot water to remove traces of gelatin, the sac being refilled with bouillon. Sterilization is effected by placing the sac in a tube of broth, sac end uppermost, with enough broth in it to cover the sac to a depth of about 1 cm., and either autoclaving for five minutes under one atmosphere pressure, or by steaming for three consecutive days in an Arnold sterilizer. The sac is inoculated by first removing some of its contents under aseptic conditions, and then introducing a small quantity of the desired bacterium in suspension or in fluid culture, the glass tube being then sealed off in the flame. The inoculated sac is tested for tightness by incubating it in a bouillon culture tube, after first washing it thoroughly with sterile water to remove any organisms which might have alighted upon it during the exposure to the air during the inoculation and sealing. If after incubation, the broth outside of the sac remains sterile, it is then ready for insertion into the animal abdominal cavity. If, on the other hand, growth occurs in the broth outside of the sac, it does not necessarily prove the porosity of the celloidin sac, for the exterior of the sac may not have been sterile at the moment of its introduction into the bouillon culture.

2. Centralb. f. Bakt., 1903, **34**, 733; Brit. Med. Jour., 1903, **2**, 313; abst. Jour. Roy. Micr. Soc., 1903, 776.

3. Ibid., 1908, **46**, 285; abst. Jour. Roy. Micr. Soc., 1908, 391; see also K. Kellerman, Jour. Appl. Micr., 1902, **5**, 2038; abst. Jour. Roy. Micr. Soc., 1903, 112.

4. Pogg. Ann., 1855, **94**, 59.

5. Ibid., 1860, **110**, 337.

6. Ibid., 1872, **147**, 195.

7. "Contributions to Medical Research," 1903, 390.

8. C.R., 1905, **141**, 660.

9. Comp. rend. soc. biol., 1907, **62**, 432.

but that on adding a halogen electrolyte, the inhibited activity of the enzyme was restored apparently without loss of power. M. E. Gripon [1] found that collodion membranes reflect light and polarize it like glass both by transmission and reflection, and also that they reflect a very much larger proportion of radiant heat, for the study of which they are preferable to mica. J. H. Matthews,[2] who has made numerous qualitative experiments with collodion membranes, finds that they are not true semipermeable osmotic membranes, but permit the passage of solute as well as solvent, from which the author infers that when osmotic action takes place it consists of a major and a minor current in opposite directions. In experiments in which a solution is placed on one side of the membrane and a different solvent on the other, no transference was found unless at least one of the solvents is capable of wetting the membrane or the latter contains a trace of alcohol. He claims the direction and extent of the osmotic action is a question of relative solubility. S. Bigelow [3] alone, and with A. Gemberling [4] have studied the effects of forcing a pure liquid through one and the same or through different membranes at varying pressures and temperatures so as to obtain comparable numerical values. The apparatus employed consisted of a vertical glass tube, to the lower end of which was fixed a brass holder having an opening 15 mm. in diameter closed by a flat membrane of the given material held in position by means of a metal ring and screws. At right angles above the holder there was a calibrated capillary tube provided with mm. scales for measuring the volumes of liquid passing through the membranes, and some distance above this there was a stopcock in the vertical tube. The pressure was obtained and regulated by means of two mercury bulbs 10 cm. in diameter, the lower fixed in place and the other movable. In using the apparatus, the membrane holder and vertical tube were filled with water to above the stopcock, and the capillary tube nearly to the end of the scale toward the pressure bulbs, and the pressure applied by opening a stopcock in the capillary tube between the bulbs and the scale. The number of cubic millimeters which would pass through 1 sq.cm. of membrane in one minute was adopted as the unit of permeability. By means of this apparatus it was found that thin collodion membranes immersed in water gave practically the same permeability results in successive experiments; and that their permeability was not materially altered under the relatively high pressure of 840 mm. of mercury. Goldbeaters' skin showed a lower degree of permeability than collodion membranes of two or three

1. C.R., 1875, **80**, Apr. 5.
2. J. Phys. Chem., 14, 281.
3. J.A.C.S., 1907, **29**, 1675.
4. Ibid., 1907, **29**, 1576.

times its thickness, while parchment paper altered continuously under constant temperature and pressure, becoming less and less permeable. The general conclusions arrived at were that Poiseuille's law for the passage of liquids through capillary tubes applied also to the passage of water through the four membranes; and that the rate at which liquids pass through molecular interstices was capable of expression "by the same laws which formulate the passage of liquids through capillary tubes."

As the result of an examination of the enzymes, pepsin, trypsin, rennet, steapsin, ptyalin, emulsin and takadiastase, A. E. Porter [1] has found that all of them, with the exception of the last named, become inactive in contact with a collodion membrane. Except in the case of ptyalin, an anti-enzymic power is developed, which is specific, being limited to preventing the action of the enzyme from which it was produced. Stomach extracts rendered inactive in this way, however, prevent the action of pepsin, trypsin and rennet. Water does not extract from the collodion membrane any substance having this property, which is also shown, though in less degree, by gelatin, reed, and white of egg membranes. The formation of anti-enzyme is less, the purer the enzyme taken.[2]

1. Biochem. Zeits., 1910, **25**, 301; Cf. Bechhold "Kolloidstudien mit der Filtrationsmethode," Z. Physik. Chem., 1907, **60**, 257. For the effect of collodion membranes on saponin, solanine, and the hæmolytic glucoside found in *Amanita phalloides*, see W. Ford, J. Pharmacol., 1910, **1**, 269.

2. Authors who have worked in this field and observed, have failed to record the great variations in permeability of collodion membranes, in the following two particulars: (1) The same cellulose when nitrated so as to produce a more fluid and less viscous solution, will, upon evaporation, produce a more difficultly permeable film than the same weight of viscous pyroxylin dissolved in the same menstruum. (2) The same pyroxylin will vary in porosity depending only upon the solvent in which it has been dissolved, an amyl acetate solution of a cellulose nitrate, yielding a more compact and difficultly dialyzable film, than the same pyroxylin dissolved in ether-alcohol. The introduction of minute quantities of vegetable or animal oils, Canada balsam, turpentine or other water-repellant bodies in a collodion solution will materially affect the speed of osmosis through the film when evaporated to dryness. It is suggested that the lack of concordance of results in this field may, in no small measure, be attributable to insufficient appreciation of the value of these two facts.

CHAPTER XVI

COLLODION AND THE CELLULOSE NITRATES IN PHARMACY AND MEDICINE [1]

THE first practical solvent of the cellulose nitrates found was a mixture of alcohol and ether, a solution of the former in the latter liquids being known as collodion. In the January following the announcement of the discovery of guncotton by Schönbein, J. Parker Maynard of Boston,[2] then a student of medicine, suggested the use of "the soluble form of guncotton" for use in surgery as a vehicle for medicine, and as a sticking plaster, although, as pointed out by Kahlbaum,[3] Schönbein made use of an ether alcohol solution in 1846 which he called his "liquid glue" or "liquor constringens."[4] Maynard published a 12mo book in 1848, in which he gave a résumé of all the existing information on the therapeutic applications of collodion, this being the first clear exposition of the subject[5] printed. So much interest was aroused in this preparation that the U.S. Pharmacopœia of 1860 contained a method for the manufacture of the "guncotton" and directions for preparing collodion from it.[6]

1. For information contained in this chapter the author is indebted to Mr. Benjamin L. Murray.

2. Although Maynard is generally credited with this discovery by his artiele "The Original Applieation of a Solution of Cotton to Surgery," B. M. and S. Jour., 1848, **38**, 266, it must be remembered that S. L. Bigelow published in the same periodieal the week previously "Discovery and Applieation of the New Liquid Court Plaster," B.M and S. Jour., 1848, **38**, 178.

3. From U. S. Dispensatory, 19th Ed. p. 385; Nat. Drug., 1902, p. 8.

4. Lancet, Lond., 1849, **1**, 289.

5. Among other carlier publications are: G. Borelli, Gazz. med. Ital. lomb. Milano, 1850, **1**, 13, 21, 29, 37; Cambrelin, Bull. Soc. de med. de Gaud, 1848, **15**, 343; C. Deschange, Areh. belges de med. mil. Brux., 1851, **7**, 478; G. Goyrand, Gaz. med. de Par., 1858, **13**, 778; J. Harriss, B. M. and S. Jour., 1853, n.s., **9**, 709; P. Hervier, M. Bretin, Rev. med. franc. et étrang., 1849, **3**, 155; J. Lassaigne, J. de chim. med., etc., 1848, (3), **4**, 541; E. McArthur, N. O. M. and S. J., 1851, **8**, 258; Magnes-Lahrens, J. de med. chim. et pharm., 1850, n.s., **2**, 14; Malgaigne., Bull. Acad. de med., 1847–8, **13**, 1372, 1391; J. Sargent, B. M. and S. Jour., 1848, **38**, 240; Schindler, Z. f. klin. Med. Bresl., 1851, **2**, 293; Scholler, Z. f. Erfahrngshlk., 1848, **2**, 346; J. Sims, N. O. M. and S. J., 1848, **5**, 257; W. Smit, N. med. chir. Ztg., 1850, **3**, 33; J. Startin, Med. Times, 1849, **19**, 177; D. Stewart, Lancet, Lon., 1857, **9**, 72; E. Wilison, Ibid., 1848, 553; F. Ilisch, Med. Ztg. Russl., 1849, **6**, 6. See also Index Medicus, and catalogue of U. S. Surgeon General's Library.

6. The nitrating mixture consisted of sulphuric acid and potassium nitrate.

The Pharmacopœal Collodions.[1] At the present time all the Pharmacopœias have collodion as an official preparation the strength of pyroxylin and proportion of solvents together with the other official preparations in which the cellulose nitrates occur, being reproduced herewith as taken from Hirsch Universal Pharmakopoe, 1902. With the exception of Austria, Hungary and Japan, all give methods and formulas for the preparation of collodions, which in several of them include processes for the formation of pyroxylin. The 4% solution of the Belg. (Pharmacopœia) and the 5% solution of the Port. contain castor oil in addition. The other formulas are:

	Pyroxylin.	Ether.	Alcohol.	Total.
Brit	10 gm.	360 ccm. sp.gr. 0.735 = 264.6 gm.	120 ccm. sp.gr. 0.834 = 100.08 gm.	374.68 gm.
Dan., Fin., Ger., Helv., Norw., Russ.	1	21	3	25
Gall	1	15 sp.gr. 0.724	4 of 95%	20
Grec	1	30 sp.gr. 0.750–0.760	——	31
Span	1	25 sp.gr. 0.758	3	29
Ital	1	12	4	17
Neth	1	$26\frac{2}{3}$	$5\frac{2}{3}$	$33\frac{1}{3}$
Rom	1	15	4 absolute	20
Swiss	1	35	5	41
U. S	30 gm.	750 ccm. sp.gr. 0.725–0.728 = 545gm.	250 ccm. sp.gr. 0.0820 = 205 gm.	780 gm.
or	1:	18.167	6.833	26

Collodion is a colorless (Finn., Germ., Helv.) or also pale yellowish, readily opalescing (Dan., Norw., Rom.), as thick as syrup (Hung.), translucent and somewhat slimy, neutral fluid, which upon evaporation of the solvent portion leaves a colorless, firmly cohering film, which should show no acid reaction upon moistening with water (Neth.). The weight of this film should amount to about 3% (Japan.), at least 3.5% (Dan.), 3–3.5% (Russ.) 3.8–4.% (U.S.) of cellulose nitrate.

Collodium Cantharidatum. (Epispastic collodion, Japan, collodium vesicans, Brit. Also called "blistering collodion"). Is official in the Belg., Brit., Dan., Ger., Helv., Japan., Nor., Port., Russ. and U.S. The method of formation is to take 100 parts of powdered can-

1. The following selected from Am Jour. Pharm., comprise the more important articles on Pharmacopœal collodion not noted elsewhere in this chapter: Liman, **23**, 182; Parrish, **21**, 292; Leidy, **22**, 24; Bigelow and Maynard, **20**, 181; Beatson, **25**, 19: Cutting, **27**, 551; Livermore and Parrish, **20**, 181; **29**, 106; Musgiller, **42**, 145; Sharp, **30**, 538; Hoffmann, **29**, 64; Mialhe, **21**, 42, 234; Schacht, **29**, 64; Proctor, Jr., **29**, 105; **36**, 304; Caspari, **30**, 371; Edwards, **21**, 233; Maynard, **38**, 563; Sherman, **30**, 212; Thompson, **42**, 114; Strolberger, **41**, 370; Mellez, **23**, 376. For variation in strength of Pharmacopœal collodion see W. Scoville's Proc. Am. Pharm. Assoc., 1907, **55**, 325. See V. Gamet, Mat. grasses, 1910, **3**, 1805.

tharides, macerate three days with 150 parts (Japan.), 150–175 (Belg.), or 160 (Russ.) ether, then filter and wash with ether until 100 parts of filtrate are obtained (Japan.), pressed out and filtered (Belg., Russ.), the total amount being 100 (Belg., Japan.), 84 (Russ.) parts. Or (Port.) extract 100 parts powdered cantharides by percolation with a mixture of 700 parts ether and 300 parts alcohol, the yield not being given. Or (Brit.), 10 oz. cantharides is percolated with acetic ether (ethyl acetate) until 20 oz. of filtrate is obtained. The cantharides ether mixture obtained as stated above serves to dissolve the pyroxylin in the proportions stated in the following table:

Ingredients.	Belg.	Brit.[1]		Port.	Russ.
Cantharides ether extract...	100	100 fl.oz.	or 200 cc.	95	84
Alcohol.....	10 of 92%	—	—	—	12
Pyroxylin.....	3.6	2.5 oz.	5 gm.	5	4
To make.....	113.6	92.5 oz.		100	100

The other Pharmacopœias use instead of pyroxylin, which is not always entirely soluble, ordinary collodion, or the elastic or flexible collodion, which is mixed with the cantharides ether extract obtained by percolation, and concentrated by evaporation or distillation, as indicated in the following table:

	Dan.	Germ.	Helv.	Norw.	U. S.
Cantharides powd.....	100	100	100	100	60
Ether.....	150	q.s.	q.s.	q.s.	
Chloroform					q.s.
Canth. Ext. conc. to.....	15	Thick syrup	Thick syrup	Thick syrup	15
Collodion.....		q.s.	q.s.		
Collodion elastic.....	85			q.s.	85
Product.....	100	100	100	100	100

Japan mixes equal parts of the cantharides ether extract and collodion, without previous concentration of the former.

Collodium Flexile.[2] Flexible or elastic collodion; collodium tenax. In all Pharmacopœias with the exception of Fin. It is prepared (Belg., Port.) by dissolving 4 parts pyroxylin in a mixture of ether 80, alcohol 10 parts and castor oil 6 (Belg.); or 5 of pyroxylin,

1. It is recommended (Greenish and Wilson, Phar. Jour., 1898, 259; Proc. Am. Pharm. Assoc., 1898, 663) to prepare the "liquor epispasticus" with cantharidin instead of powdered cantharides.

2. See Pharm. Ztg., 1906, **51**, 73.

70 ether, 20 alcohol, and 5 castor oil (Port.). Most Pharmacopœias combine these constituents by shaking with castor oil or glycerol, as shown below:

	Aust., Helv.	Dan.	Gall.	Span.	Hung., Rom.	Ital.	Japan.	Neth.	Norw.	Russ.	Swiss.
Collodion	98	99	100	100	100	97	90	96	99	98	100
Castor oil	2	1	7	10	2	3	3	4	.....	.....	.....
Glycerol	.....	.....	.....	.....	.....	.....	.....	.....	1	2	1
	100	100	107	110	102	100	93	100	100	100	101

The others add resinous substances, namely:

	Brit.		Germ.	Grec.	U. S.
Collodion	96 parts by volume or 72 parts by weight.	or 480 cc.	94	90	92
Canada Balsam	4 parts.	20 gm.	—	—	5
Castor Oil	2 parts.	10 gm.	1	1.5	3
Turpentine	—	—	5	4.5	—
To make	78		100	96	100 parts.

In the usual action of collodion, the evaporation of the large bulk of solvent in comparison with the quantity of total solids present, the ether evaporating especially rapidly, causes the formation of a film having remarkable adhesiveness and contractility. The latter property in the treatment of minor surgical wounds and for the protection of abraded surfaces is very valuable, although on an unprotected surface or open fissure, the ether is quite painful, due to the burning action of the partially confined solvent.[1] The evaporation of the solvent causes a contraction of the film, and this effect is taken advantage of in cases where contraction of the tissues is desired, as in coapting the edges of a wound. Where collodion is used simply as a means of protection, the contractility of the film is a distinct drawback.[2] To obviate this, the flexible collodions were introduced into practice.

1. The great difficulty in the surgical use of all collodions is the slight trace of moisture which it is difficult to remove from the skin, and the secretions from the wound or the normal perspiration, exude and form underneath the impervious skin a repellent layer which detaches the collodion film.

2. In the case of, for instance, carbuncular sores, the application should first be made on the outer circumference of the swelling, and thereafter on drying, other coats be applied, each one of smaller circumference than the preceding. In this manner a large surface can be contracted and thoroughly protected. All collodions, of course, are highly inflammable.

C. S. Rand first proposed to obviate this constringent tendency by the addition of Venice turpentine to the collodion.[1] Canada balsam (balsam of fir) has also been suggested and is incorporated with the collodion by simply shaking. The presence of oils, glycerol, etc., when introduced in the proper proportions entirely inhibits the tendency of the collodion to contract on drying, and, as its name indicates, renders the adhesive flexible. Caldwell,[2] finding the official product too contractile, suggests the following formula: glycerol 2, Venice turpentine 5, lard 10, collodion 83 (all parts by volume). Klein [3] recommends the addition of 10% of balsam of Peru to collodion to increase its flexibility.[4]

Iodoform Collodion. Official in the Pharmacopœias of Gall., and the Supplements of Ger., Neth. It is prepared by dissolving 1 part of iodoform in powder in 9 (Gall.), 14 (Neth.), or 19 (Ger.) parts of elastic collodion. A liquid of light brown, rather than dark brown color (Ger.).[5]

1. Am. Jour. Pharm., **22**, 18. To give more flexibility to the film, Sourisseau of Kaiserberg suggested the addition of one part of elemi to twelve of collodion. According to Startin of London, opacity and elasticity may be imparted at the same time by adding from half a drachm to a drachm of lard, or some similar fatty matter, previously dissolved in ether, to an ounce of collodion. The qualities of softness and elasticity may also be given by combining collodion with castor oil, in the proportion of thirty parts to two, agreeably to the plan of Guersant, who found it useful, thus modified, in erysipelas; and the proportion of castor oil may be increased if thought desirable. This is the method preferred by the French Codex. An elastic collodion, somewhat similar in which, besides castor oil, Venice turpentine and white wax are ingredients, has been proposed by E. Lauras, (Pharm. Jour., **12**, 303.) According to Cap and Garot, the most successful way for obtaining an elastic collodion is to mix two parts of glycerol with one hundred of collodion. Glycerized collodion is exceedingly supple, does not crack and scale off from the skin, and accommodates itself to the motions of the part. In order to imitate the color of the skin, an ethereal tincture of turmeric or saffron may be added, so as to produce the desired tint. Meller has proposed a solution of shellac in highly rectified alcohol, so as to have a gelatinous consistence, as a substitute for collodion. U. S. Dis., 19th Ed., 387. The "collodium elasticum" of J. Lorenzen (Pharm. Ztg., 1905, **50**, 20; abst. Proc. Am. Pharm. Assoc., 1905, **53**, 523), consists of 5 parts turpentine dissolved in ether 10, filtered and added to a mixture of collodion 94 and castor oil 1.

2. Pharm. Era, 1899, 667; Proc. Am. Pharm. Assoc., 1900, 445.

3. Therap. Monatsh., 1897, 238; Proc. Am. Pharm. Assoc., 1898, 662.

4. Very tenacious collodion according to Böttger (Chem. Centr., 1872, 745) may be prepared by adding a small amount of balsam of copaiba to ordinary collodion. Balsam tolu has been used for the same purpose in pyroxylin lacquers. "Kelly's Collodion Paint" consists of glycerol 1, comp. tr. benzoin 12, collodion 36 (parts by volume). V. Gamet (Mat. grasses, 1910, **3**, 1876) has given rational formulas for a number of photographic and medicinal collodion preparations.

5. "Paraform collodion," used in various skin diseases, and in 5% strength as a caustic for soft molluscoid nevi, is prepared by mixing paraform (trioxymethylene) 10, with collodion 90. "Collodium Antisepticum," which may be used like ordinary cotton (Jour. Méd., Dec. 26, 1886) consists of powdered mastic 3, powdered narcotine 1, balsam Peru 1, and chloroform 35. Strips of linen or silk soaked in this solution form an excellent adhesive plaster. "Creosoted Collodion" (Leitm. Rundschau, 1885, **9**, 2) consists of equal volumes of collodion and beechwood creosote. According to P. Eyer (D.R.P., 225736, 1910) homogeneous

Salicylated Collodion. In the Supplments to Ger. and Neth. Pharmacopœias. One part extract Indian hemp (Cannabis Indica), 5 of common turpentine and 10 parts salicylic acid are dissolved in 82 parts of collodion by shaking, and 2 parts acetic acid (Ger.) added. Or, extract Indian hemp 1, salicylic acid 20, ethereal spirit (equal parts alcohol and ether) 19, and collodion 60, are mixed (Neth.). The proprietary "Corn Cures" and "Corn Collodions" are preparations constructed on the above principle.[1] These "patent" cures are painted on the affected part with a camelhair brush.

Collodion Stypticum, styptic collodion, xylostyptic ether. Dissolve 1 part of tannin in 8 parts collodion (Grec.), or tannin 4, in alcohol 1, then ether 4 in collodion 11 (Neth. Suppl.); or, tannin 20 gm. with 5 cc. alcohol, added to 25 cc. ether and sufficient collodion, which when shaken will make 100 cc. (U. S.)

This preparation was originally suggested by B. Richardson, who added a small quantity of tincture of benzoin.[2] The one recommended by Pavi[3] is somewhat similar but stronger. Styptic collodion was introduced as an astringent and hemostatic agent, but experience has proven it to be of but little value, due to the moisture present in the blood which prevents the collodion from adhering. Styptic collodion can be rendered flexible by the addition of castor oil.

Method of Preparing Collodion by U. S. Pharmacopœia VIII. The method is as follows:

Pyroxylin	40 gm.
Ether	750 cc.
Alcohol[4]	250 cc.
To make about	1,000 cc.

ointments containing collodion and suitable medicaments are obtained by agitating the collodion solution in which the medicament is dissolved, with a suitable fat or mineral grease, until a product of the desired consistency is obtained. The alcohol-ether should consist of about 80% alcohol and 20% ether. For example, 28 gm. nitrocellulose and 140 gm. salicylic acid are dissolved in 1000 gm. ether-alcohol, and 400 gm. vaseline incorporated with the solution.

1. "Wizard Corn Cure" consists of fluid extract Indian hemp, 1 dram; salicylic acid, 4 drams; and collodion 6 oz. (all by volume). The composition of "Kennedy's Bunion Cure" is stated as chrysarobin 3; cocaine hydrochlorate 1; chloroform 30; and collodion 30 (all parts by weight). "Kaposi's Wart Collodion" combines mercuric chloride 1, dissolved in flexible collodion 30, being applied once each day to the wart around its base.

2. Pharm. Jour., 1867, p. 29.

3. Consists of tannin, 100 gr., benzoic acid, 60 gr., phenol crystals, 200 gr., and collodion, 8 fl.oz. According to Am. Jour. Phar., 1882, **54**, 425, collodion, 100; phenol, 10; tannin, 5; and benzoic acid, 5 (all parts by weight) instantly coagulates blood, forming a consistent clot under which wounds readily heal.

4. Morrison (Proc. Am. Phar. Assoc., 1894, 281), S. Taylor (Pharm. Jour., 1906, **23**, 669), G. Beringer (Proc. Am. Pharm. Assoc., 1906, **54**, 501), and the Illinois Pharm. Review Committee (Pharm. Era, 1897, **18**, 4) advocate the replacement of the ether and alcohol by acetone, Beringer submitting several appropriate

To the pyroxylin, contained in a suitable bottle, add the ether, and allow it to stand for fifteen minutes; then add the alcohol, and shake the bottle until the pyroxylin is dissolved. Cork the bottle well, and set it aside until the liquid has become clear. Finally, decant [1] the clear portion from any sediment which may have deposited,[2] and transfer it to bottles, which should be well corked and sealed.[3]

Keep the collodion in a cool place, remote from lights or fire.[4]

Official Method of Pyroxylin Manufacture.[5] Formerly the U.S. Pharmacopœia directed that the pyroxylin should be prepared at the time of making the collodion, giving directions for the purpose,

formulas. The author is convinced that notwithstanding the almost universal use of ether-alcohol as the official solvent, acetone or a combination of acetone with a non-solvent as benzol, with or without the addition of ethyl acetate is a much more efficient combination than ether-alcohol. Inasmuch as the solvent portion is without remedial value, it may be regarded simply as a vehicle. Compared with ether, acetone is a better solvent of a wider range of cellulose nitrates; boils about 20° higher; is less hygroscopic; many times cheaper; much less inflammable; does not form a combustible mixture with air; vapor is lighter than air; is less irritant to an abraded surface, and is the equal in solvent power for alkaloids, glucosides, and medicaments which might be introduced. Benzol compared with alcohol is many times cheaper; evaporates more slowly, and is less hygroscopic. The author would suggest as an improvement on the Pharmacopœal ether alcohol formulas, a mixture of acetone 30, methyl alcohol 20, ethyl acetate 15, and benzol 90%, 35 (all parts by volume). It is a significant fact that the proprietary collodions sold under various names contain no ether, or just sufficient to impart an ether odor, but are composed of solvents of higher boiling points, slower and more regular evaporative tendency and which are much less hygroscopic.

1. Kranzfeld (Pharm. Ztschr. f. Russl., 1889, 392) obtains perfectly transparent collodion by agitating with sand and filtering. The recommendation of E. Eberle (Apothecary, Boston, 1905, **17**, 951) that the pharmacopœal method be reversed so that the alcohol is added first, the ether being added after the alcohol has thoroughly saturated the pyroxylin is, as is quite familiar to those having wide commercial experience along these lines, contrary to good practice. In a combination of solvents and non-solvents of the cellulose nitrates, those fluids of high dissolving power are always added first, in order to obviate the weakness which the solvent develops when attenuated with a non-dissolving liquid.

2. In U.S.Ph. 1870, the sediment was directed to be incorporated again with the collodion with the result that a tougher film was produced from the fact that the sediment is primarily composed of undecomposed cotton filaments and these become felted when the collodion evaporates to dryness and thus acts as a binder. In those collodions where the addition of acetone dissolves the ether-alcohol insoluble portion, the residue is due, not to unchanged cotton, but often to highly nitrated cotton (guncotton).

3. H. Wiebelitz (Pharm. Ztg., 1906, **51**, 1003) in suggesting that the Pharmacopœia require that the film of collodion left after the evaporation of the solvent be clear and transparent and not opaque (indicating freedom from water) forgets that the opacity in the film usually comes not from water contained in the collodion, but from moisture precipitated from the atmosphere, caused by inducing the formation of the dew-point in the immediate vicinity of the film by reduction of temperature from the rapid evaporation of the ether. This can be readily proven by introducing into the collodion a small amount of a high-boiling pyroxylin solvent, i.e., amyl acetate, when a transparent resplendent film will result.

4. A more rapid method of preparation (M. Chevreau, Jour. de Pharm., June, 1887) is to first pour the ether on the pyroxylin, while agitating the mass, the alcohol being added as soon as absorption is completed.

5. See Senft, Pharm. Post, 1899, 907; abst. Proc. Am. Pharm. Assoc., 1900, 788.

but at the revision of 1870 the process of the British Pharmacopœia was substantially adopted, a formula for the manufacture of pyroxylin being separately given in the Pharmacopœia. The 1890 U.S.Ph process is as follows: Purified cotton, 100 gm. (or 3 oz. av., 231 gr.); nitric acid, 1,400 cc. (or 47 fl.oz., 163 minims); sulphuric acid, 2,200 cc. (or 74 fl.oz., 187 minims); alcohol, ether, water, each, *a sufficient quantity*. Mix the acids gradually in a glass or porcelain vessel, and, when the temperature of the mixture has fallen to 32° C. (90° F.), add the purified cotton. By means of a glass rod imbue it thoroughly with the acids, and allow it to macerate, until a sample of it, taken out, thoroughly washed with a large quantity of water, and subsequently with alcohol, and pressed, is found to be soluble in a mixture of *one volume* of alcohol and *three volumes* of ether. Then remove the cotton from the acids, transfer it to a larger vessel, and wash it, first, with cold water, until the washings cease to have an acid taste, and then with boiling water, until they cease to redden blue litmus paper. Finally, drain the pyroxylin on filtering paper, and dry it in small, detached pellets, by means of a water-bath or steam-bath, at a temperature not exceeding 60° C. (140° F.). Keep the pyroxylin, loosely packed, in well-closed vessels containing not more than about 25 gm., in a cool and dry place, remote from lights or fire.

The process recognized by the British Pharmacopœia is as follows: Cotton, 1. oz (Imperial) or 10 gm.; sulphuric acid, 5 fl.oz. (Imp. meas.) or 50 cc.; nitric acid, 5 fl.oz. (Imp. meas.) or 50 cc.; distilled water, *a sufficient quantity*. Mix the acids in a porcelain mortar, immerse the cotton in the mixture, and after it is thoroughly wetted by the acids stir for three minutes with a glass rod; wash the product with distilled water until free from acid; drain on filtering paper, and dry the pyroxylin on a water-bath.[1] C. Jene[2] who has determined the nitrogen content of the pyroxylin prepared according to the German Pharmacopœia, finds the average to be 11.9%.

1. T. Tyrer (Chem. and Drug., Aug., 1896, p. 207; Pharm. Jour., Aug., 1896, p. 109) recommends the following process for introduction into the Pharmacopœia: Cotton wool, 200 gr.; sulphuric acid (1.845), 8 fl.oz.; nitric acid (1.450), 4 fl.oz.; water, 1½ fl.oz. The temperature of the mixed acids should be 162° F.; then on adding the water, the temperature should be allowed to cool to 150° F.; the cotton is immersed for two minutes twenty seconds. Transfer to a porcelain strainer, press thoroughly and quickly with a pestle, and throw into not less than 3 gals. of distilled water; stir, drain, and press, which process is to be repeated until the cotton is free from acidity, and the wash-water free from sulphates. Wring out as dry as possible, pick, and dry at a temperature of 90° F. Bienert states (Pharm. Ztg. Russl., **94**, 676) that when sulphuric acid of sp.gr. 1.83 is being used, the nitric acid should not be higher than 1.36 to 1.38. See also Flint (Proc. Am. Pharm. Assoc., **94**, 663).

2. Chem. Zeit., 1904, **28**, 61. See report on Collodion by inspectors of pharmacies, Lourain, Ann. de Pharm. 1907, **13**, 331.

National Formulary Collodions. In the unofficial formulary published by the American Pharmaceutical Association are recognized the following four preparations, all prepared from flexible collodion; They are, Iodized Collodion:[1] iodine in powder, 5; collodion 95 (parts). Shake the iodine in a bottle with the collodion until dissolved. Iodoform Collodion: iodoform 5, collodion 95 (parts). Croton Oil Collodion: mix croton oil 10, with collodion 90. Compound Salicylated Collodion:[2] alcohol 10, salicylic acid 11, extract of Indian hemp, 2; flexible collodion a sufficient quantity to make 100 (parts).[3] [4]

Proprietary Collodions. A large number of private collodions or "liquid court plasters," are offered for sale on the market, comparatively few of which follow the various formulas of the Pharmacopœias. This is mainly due to the fact that apparently more satisfactory preparations are to be obtained in which the solvent portion is less costly, and which, containing no ether, the inflammability and and speed of evaporation is diminished, and the pain on applying to a raw surface materially lessened. These preparations may be roughly divided into the following two classes: (1) those in which the ether has been substantially if not entirely replaced by the less expensive and equally efficient commercial wood alcohol, acetone, or a mixture of both. Trade products such as "Heal All," "Seal All,"

1. See P. Caldwell, Drug Circ., 1907. **51**, 204.

2. A similar proprietary article is known as "Gezow's Corn Collodion."

3. The Indian hemp is dissolved in the alcohol, and the salicylic acid in about 50 parts of collodion previously weighed into a tared bottle. The former solution is then added to the latter, and finally sufficient collodion to make the product weigh 100 parts.

.4 A "Fluid Belladonna Plaster" may be made by taking a quantity of the alcoholic extract of belladonna equivalent to 37 gr. total alkaloids, camphor 108 gr., pyroxylin 185 gr., alcohol and ether equal parts of each to make 16 fl.oz. "Moleshott's Iodized Collodion" is made by dissolving iodoform in fine powder, 1, in flexible collodion 15. Used for gout. A "Calming Collodion" for neuralgia or tender abraded surfaces (A. S. Gubb, Lon. Med. Rec., 1887) may be prepared from powdered mastic 3, powdered narcotine 1, balsam Peru 1, chloroform 6 (all by weight). "Anarthritic Collodion" for gout (Monin, L'Union méd., 1887) comprises flexile collodion and ether, of each 15, salicylic acid 4, morphine hydrochlorate 1 (all parts by weight). The principal other unofficial collodions are included in the following, references being to Am. Jour. Pharm.: Aconital, Shinn, 1848, **30**, 217; cantharidal, Ilisch, **21**, 295; **22**, 19; Oettinger, **22**, 229; Proctor, **36**, 304; **39**, 531; Rand, **22**, 18; Thompson, **42**, 11; Tichborne, **34**, 320; Cantharidated,Tichborne, **43**, 240; Caustic, Macke, **30**, 127; Conial, Shinn, **30**, 217; Elastic, Lauras, **25**, 185; Musgiller, **42**, 146; Rand, **21**, 209; Ferruginous, Aran, **26**, 81; Iodinal, iodosulphural, Shinn, **30**, 217; Paper, Thompson, **42**, 116; Sinapic, Tichborne, **34**, 323. Caustic or Corrosive Collodion consists of mercuric chloride 2, collodion flexile 15. Collodion Duplex is made by dissolving guncotton 1, in ether 12, and alcohol 2. Collodion Antephelidicum, used as a remedy for tans and freckles, contains zinc sulphocarbolate 1, collodion 45, alcohol 5, oil of lemon 1 (Proc. Am. Pharm. Assoc. vol. 23). Gelatinous Collodion is pyroxylin 1, in "spirit of ether" 2. Collodium Rubrum is elastic collodion tinged red with alkanna. Collodium Lentencens is collodion 100, glycerol 1.5. According to Aufrecht (Pharm. Ztg., 1910, **55**, 598) "frigusin" was found to consist of about 23% iodized uric acid in a collodion base.

" Heal Skin," " Seal Skin," " Celakut," and " Fluid Skin" are apparently constructed on this principle. (2) Entire departure from Pharmacopœal practice, the collodion being a light-weight pyroxylin lacquer or heavy bronzing fluid, one analyzed by the author containing pyroxylin 5 oz., castor oil 4 oz., amyl acetate 25 oz., commercial wood alcohol 35 oz., acetone 10 oz., benzene 58 oz., all per gal. Benzene (commercial benzol) is always a conspicuous ingredient. " New Skin," " Liquid Skin " and " Heal-m-all " are preparations of this general nature. They have decided advantages over the Pharmacopœal formulas in that the high and low boiling-point solvents are so adjusted as to cause no whitening and weakening of the film from moisture absorption during evaporation; they are much less expensive, are usually clarified by paper filtration; and are not as readily detached from the skin by means of perspiration or other moisture. In the author's judgment they are, in the main, superior to the Pharmacopœal preparation.[1] To render collodions less visible when applied to the skin, a small amount of alkannet, saffron, erythrosine or carmine is useful when added to the collodion. It is said that the addition of 0.1% alloxan or allantoin to flexile collodion will not affect the shade of the latter, but when placed on the skin will gradually assume a delicate natural pink tint.

Uses. The collodions make excellent vehicles for the topical application of any medicament soluble in alcohol and ether, such as the alkaloids, glucosides, resorcin, iodoform, mercuric chloride and iodides, aristol, iodol and other antiseptics and fungicides. They are best dispensed in small round-shouldered vials provided with a cork through which a small camelhair brush has been securely fastened; this avoids loss of material and hardening of the collodion upon the brush. More recently the collodions have been dispensed in collapsible tubes —a great improvement over a bottle and brush, especially from an aseptic point of view. Collodion is used only when it is desired to contract a surface or constringe the edges of a wound; otherwise the flexible or medicated collodions are preferable. Iodized collodion is a favorite application to chilblains. Cantharidal collodion is useful as a vesicant instead of cantharides, being efficient in severe neuralgia and other painful affections. Iodoform collodion is used externally

1. J. Francis (Bull. Pharm., 1905, **19**, 450) in commenting on the popularity of proprietary collodions, states that celluloid and acetone are used to replace the official substances. This is at variance with the author's experience in analyzing all the proprietary articles mentioned above. Transparent celluloid is a very viscous substance in solution, 4% (the Pharmacopœal standard) forming a solution so heavy as to be practically unbrushable when acetone is the solvent. Pyroxylin in solution and containing no camphor is, correctly speaking, not celluloid. Camphor is a distinct irritant when applied to an abraded surface.

for rheumatism, orchitis, and other inflammatory conditions, especially of a venereal character. Painted over boils, it has been stated to be highly efficient in promoting their absorption. The application of flexile collodion is said to prevent pitting in smallpox.[1]

There are many vocations to the members of which it is of great trouble and annoyance that traces of their profession appear upon their hands. This is especially true in photography on account of working with silver solutions. By painting the fingers with collodion, and removing the same with a little wood alcohol or acid at the close of work, the fingers may be kept unstained. Collodion is used analytically to distinguish between phenol and creosote, forming a precipitate with the former and being unaffected by the latter.[2]

Analytical. The following tests [3] are sufficiently accurate to enable judgment as to purity and strength of Pharmacopœal collodions to be made.

(1) *Acidity.*[4] 0.01 gm. azolitmin is dissolved in 200 cc. distilled water and rendered neutral (rose-purple tint). 25 cc. collodion is precipitated by the gradual addition of 100 cc. azolitmin solution above, adding the water slowly and shaking vigorously after each addition. The precipitated pyroxylin is filtered off, and 50 cc. of filtrate placed in a Nessler tube with a control tube of 50 cc. of the litmus solution not used. By careful addition of tenth-normal alkali to tube No. 1, until the color is the same as the control, the amount of acid present can be accurately determined when as low as 0.0003%. Or, 50 cc. collodion is placed in a 6 in. evaporating dish, 200 cc. water added, and the collodion and water vigorously beaten with an ordinary egg beater for ten minutes. An aliquot portion of the filtered liquid is then titrated with standard alkali, azolitmin or phenolphthalein being used as indicator.

(2) *Total Solids.* As has been previously pointed out, estimation of solids by evaporation to dryness usually gives results too high, due to difficulty in elimination of last traces of solvent. A better method is to precipitate with distilled water, as in the first test above, filter from the liquid in a Gooch crucible, wash with water until the precipitate is free from odor of solvent, dry at 100° to constant weight. If oils

1. D. Samways (Brit. Med. Jour, Nov. 21, 1896) treats external piles with collodion. Namé (Jour. de Méd. de Paris, Sep. 12, 1897) dresses contusions by the application of Menthol Collodion (menthol 6 gm., collodion 25 cc.).

2. According to Sieker (Pharm. Rev., 1899, 377) collodion does not furnish an efficient test for the presence of carbolic acid in creosote. For collodion substitute see Thibault (Bull. de Pharm. der Sud.-Est., 1899, 656; Apoth. Ztg., 1900, 64; Proc. Am. Pharm. Assoc., 1900, 445).

3. Taken entirely from the author's experience.

4. See P. Röder, Pharm. Ztg., 1906, **51**, 277.

or medicaments are suspected, the dried precipitate may be Soxhlet extracted with ligroin or chloroform and reweighed, the final weight giving the anount of pyroxylin originally present. Castor oil is readily separated by precipitating the pyroxylin with chloroform, washing the precipitate with chloroform until the filtrate leaves no residue, the chloroformic filtrate being evaporated to dryness and weighed, the weight being castor oil.

(3) *Total Solids not Cellulose Nitrate.* An approximate method consists in evaporating a weighed amount of collodion to dryness with about ten times its weight of sand, and subtracting from the total solids found, the pyroxylin found by a method described above.

(4) *Liquid Portion.* On the assumption that it consists of alcohol and ether only, the collodion is treated with five times its volume of a high-boiling hydrocarbon (kerosene or xylene) the precipitated pyroxylin removed by filtration, and the ether and alcohol distilled off in an ordinary fractionation flask on the water bath, the petroleum hydrocarbons or xylene remaining behind in the fractionation flask. The amount of alcohol present may be determined by well-known methods, the difference between this result and the total volume of distillate being the ether. Or, the ether is the total weight minus the sum of the alcohol and pyroxylin. Alkaloids, etc., present are determined from the chloroformic residue in (2) above.

CHAPTER XVII

THE CELLULOSE NITRATES IN PHOTOGRAPHY, EMULSIONS, FILMS AND PROCESSES

This chapter comprises the present day ramifications of the cellulose nitrates in the various photographic arts, including monochrome and color photography. Collodion is by no means an obsolete process, the bad repute under which it labored ten to twenty years ago—commencing at the time of its being supplanted by the gelatin processes of the early eighties—is being gradually overcome, as workers realize the possibilities of the processes when strict cleanliness and attention to detail are observed, so essential to success in collodion manipulation.[1] At the present time collodion is largely used in photo-engraving, photo-lithography, photo-zincography, enlarged negatives and carbon enlargements, lantern slides, transparencies, ferrotypes and process blocks. The dry plate, and specifically the orthochromatic dry plate which has attained such a high degree of excellence, still remains as the best and most satisfactory method for outdoor work, for landscape, portrait and interior indirect tricolor reproduction on account of its reliability and pliability as a process, and the extreme fidelity of delineation. Collodion emulsion is especially useful in direct three-color half-tone work, the reproduction of paintings in monochrome, and for line work in black and white subjects. The collodion processes are considered by many as exceedingly difficult if satisfactory results are to be obtained. This is an error in that the processes are not difficult, but simply require careful attention to seemingly unimportant details, in order to insure uniform and satisfactory results. The increasing interest in collodion photographic processes due to its recent "re-introduction" by certain firms of commendable energy, and the marvelous development of the "moving

1. In the descriptions of methods and processes of the photographic application of collodion to follow, it may appear that seemingly trivial matters are unnecessarily dealt with in the footnotes, but it should be remembered that success or failure in collodion photography depends often upon trivial and inexplicable points. The instructions for the preparation of continuous tone and film negatives, etc., are intended to be fairly complete as representing the latest methods, *and are not interchangeable*, an important point.

picture" industry, has contributed in no small measure to commercial activity in this cellulose nitrate field.

Historical. Although it is generally conceded that Gustav le Gray [1] of Paris, was the first to suggest the use of collodion in photography, it remained for F. S. Archer [2] to make a practical success of the idea, "Archer's Collodion Process" or the "Archerotype" process being published in 1851.[3] After B. Pont [4] and A. Rollason [5] had secured protection for coating plates with a collodion emulsion, Archer [6] filed his patent. Later in the same year J. Clive [7] and J. and D. Day [8] received only provisional protection on their composite photographic processes. The next year J. Johnston [9] patented the first collodion ferrotype method; C. Langlois [10] constructed a "collodion" camera; J. Cheetham [11] described the use of collodion in photo-mechanical printing; R. Norris [12] transferred collodion prints from glass to fabrics, while W. Newton [13] communicated collodion printing methods and T. de Beauregard [14] developed a chromo-gelatin process assisted by collodionized negatives.

Archer's process speedily attracted considerable attention as being far superior to the daguerreotype and albumen processes which it was destined so soon to supersede. In 1854 Millet first made collodion positive pictures on enamel, which were exhibited before the French Academy of Sciences.[15] Two years later appeared the work of Norris on the influence of the quality of pyroxylin used on the porosity and sensitiveness of the collodion dry plate.[16] It was not until 1861 [17]

1. Not Legray. He first used "a solution of collodion wool." In his pamphlet, which appeared in June, 1850, entitled "Traite pratique de photographie sur papier et sur verre, Paris," he states on p. 42, "I discovered a treatment of collodion on glass with hydrochloric acid, methyl ether, potassium and sodium fluorides dissolved in alcohol 40%, made sensitive with acetate of nitric silver and obtained pictures in 20 seconds in the shade." Le Gray's formula is practically impossible, because the fluorides produce no photographic image, and hydrofluoric acid was at that time but little known.

2. Archer and Le Gray struggled for several years for priority over the discovery of the collodion treatment, and Archer's contentions (Snelling's Photog. Jour., 1857, p. 256; Kreutzer, Jahrb. f. Phot., 1857, p. 506) in which Fannie Archer (his wife) lent support (Liverpool and Manchester Photog. Jour., 1857, p. 121; Revue Photog., 1857, **2**, 207; Kreutzer, Jahrb. f. Photog., 1857, p. 506) are generally accepted.

3. "The Chemist," New Series, Vol. 2, No. 19, p. 257, Mar., 1851.

4. E.P. 309, 1855. 5. E.P. 770, 1855. 6. E.P. 1914, 1855.
7. E.P. 2139, 1855. 8. E.P. 2808, 1855. 9. E.P. 2072, 1856.
10. E.P. 2254, 1856. 11. E.P. 2871, 1856.
12. E.P. 2029, 1856. See L. Angamarre, E.P. 1159, 1856.
13. E.P. 624, 1857. 14. E.P. 3066, 1858.

15. "Cosmos," Mar., 1854; Ding. Poly., 1854, **131**, 467; 1858, **147**, 157. See Bingham, Horn's Phot. Jour., 1854, **1**, 43; C.R., **36**, May; Ding. Poly., 1852, **125**, 28.

16. He first called attention to the increased sensitiveness of plates prepared with a combination of collodion and gelatin.

17. Although the collodion paper process was proposed by Gaudin, G. W. Simpson made the first detailed experiments with it, and read before the London Phot. Soc., Mar. 14, 1865, a description of his process. He took 30 gm. wood alcohol and 1 gm. silver nitrate, and dissolved this in the collodion of 3% pyroxylin strength. Then a 3.5% solution calcium chloride in alcohol was prepared and this added in

that Gaudin published his results on collodion emulsion, which, however, was not made practicable until 1865, in which year Sayce and Bolton described the usefulness of silver bromide, and established the collodio-bromide emulsion as an important branch of photographic work. W. Clark,[1] R. Brooman,[2] H. Dixon,[3] T. Hooman and J. Maliszewski,[4] J. LaFarge,[5] M. Risler,[6] A. Rollason,[7] A. Worthley,[8] L. Crozat,[9] F. and L. Kossuth,[10] and E. Pettit [11] made minor improvements. Provisional protection was granted in England to D. Reed,[12] A. Marion [13] and F. Grüne,[14] the first two for sensitized films and the latter for photographing on ivory with collodion.

By "collodion" is to be understood in this connection an ether-alcohol solution of a cellulose nitrate. It soon became evident that the cellulose nitrate exerted great influence on the working qualities of the collodion prepared therefrom. This led Eder (whose work is mentioned in Chapter II) Pelouze and Maurey,[15] Schneider and Rettenbacher,[16] Abel,[17] Livonius,[18] Soubeiron [19] and others [20] to experiment as to the most feasible methods of preparing the pyroxylin, preserve its neutrality and increase the stability. This contributed incidentally to expansion of the entire cellulose nitrate field from combined investigation of solvents and methods of pyroxylin manufacture.

Collodion Emulsion. Certain inconveniences having arisen in attempting to adapt the collodion film in its wet state to various branches, led to many attempts in the earlier days of collodion photography to prepare the film for use in the dry state. The excess of silver nitrate unacted upon was removed from the surface by washing, but as this greatly impaired the sensitiveness of the plate, it was found necessary to coat the film surface with some material which would partially restore the sensitiveness—the so-called "preservatives,"

10% amount to the silver nitrate solution, thus precipitating silver chloride, which formed the suspended emulsion.

1. E.P. 3024, 1860. 2. E.P. 955, 1861. 3. E.P. 1074, 1861.
4. E.P. 1089, 1861. 5. E.P. 2598, 1862. 6. E.P. 2954, 1863.
7. E.P. 2143, 1864. 8. E.P. 2347, 1864. 9. E.P. 2953, 1864.
10. E.P. 449, 1865. 11. E.P. 72, 1865.
12. E.P. 3542, 1867; J. Lémary, E.P. 5223, 1879. 13. E.P. 1206, 1868.
14. E.P. 2022, 1869; Cf. W. McCaw, E.P. 941, 1870.
15. C.R., 1864, **59**, 363; Chem. Centralb., 1865, 457.
16. Jahrsb. Chem., 1864, 798; Ding. Poly., 1864, **174**, 209.
17. Phil. Mag., 1866, (4), **32**, 185; J. pr. Chem. 1867 (1), 101, 488; Ber., 1867, **9**, 1939; Jahrsb. rein. Chem., 1876, 156.
18. N. J. Pharm., **16**, 122. For replacement of collodion in photography by nitrosaccharose, see J. Bonneville, E.P. 814, 1881.
19. Jour. Pharm., 1848, 263; Ding. Poly., 1848, **110**, 415.
20. See Weingartshofer, Kreutzer's Jahrsb. Phot., 1857, 246; Sourisseau, Horn's Phot. Jour., 1854, **1**, 94; Beloc, Ibid., 1856, **7**, 12; Béchamp, Heinlein's Photographicon, 1869, p. 6; C.R., 1852, No. 14; Ding. Poly., 1852, **126**, 114; Claudet, Horn's Phot. Jour., 1855, **3**, 60; 1855, **4**, 6; 1855, **4**, 61.

as they preserve the sensitive surface from direct atmospheric contact, very similar to a lacquer or varnish. This coating also maintains the collodion in a sufficiently permeable condition, so that it responds to developers and the various baths to which it is subjected in the processes subsequent to exposure. These so-called preservatives were tea, coffee, beer and other gallic and tannic acid-containing products, and it appears that aside from simple protection, the tannin exerted another function, that of imparting an organic element to the sensitive film, forming an "organic sensitizer" whose sensitive action is apparently to form an organic silver combination, increasing the sensitiveness of the plate, which in consequence aids in increasing density. The word "emulsion" is, strictly speaking, incorrect, there being no oily or fatty matter in permanent suspension, a photographic emulsion in reality being an extremely finely divided precipitate of silver halide (chloride, bromide, iodide, but never fluoride) held in temporary suspension in the collodion medium, but being in so minute a state of subdivision as to cause the film to appear structureless and entirely homogeneous to the unaided eye. There is therefore this clear-cut distinction between "wet collodion" and "collodion emulsion," for whereas in the former the silver halide is precipitated on the surface of the collodion only, in the latter the silver precipitate is disseminated uniformly throughout the entire collodion mass. A collodion emulsion in its plain state (i.e., without the presence of dyestuffs) is seldom as sensitive as wet collodion, and never as sensitive as gelatin dry plates, but where extreme sensitiveness is not required, there are other qualities present which give to collodion emulsion advantages possessed neither by gelatin or wet collodion.

Methods for the preparation of nitrocellulose [1] are given in Chapter III, and collodion therefrom in Chapter XV, the latter being but a pyroxylin lacquer with ether-alcohol as the menstruum. Collodion emulsion may be prepared "unwashed" or "washed," depending on whether the nitrate [2] formed as the result of the interaction

1. A great deal has been written as to the physical state of the pyroxylin most suitable for photographic work, as regards porosity, purity, etc. It is conceded, however, that best results are obtained by purifying the pyroxylin by precipitating a solution in water as described in Chapter XVI. In other methods, the pyroxylin is purified by pouring a collodion solution in a fine stream on the surface of water, and drying. By "plain collodion" is to be understood the Pharmacopeal collodion. For theoretical discussion of photographic emulsions, see W. Bancroft, J. Phys. Chem., 1910, **14**, 12, 97, 201.

2. While ammonium and zinc bromides and silver nitrate are readily soluble in ethyl alcohol and less so in acetone, potassium bromide is insoluble in alcohol and acetone, and for this reason is inapplicable for collodion emulsion in silver bromide formation. Chlorides have also another function in collodion emulsions, where they tend to eliminate free silver, but at the expense of decreased sensi-

between the alcoholic silver nitrate and ammonium, zinc or cadmium bromide (in this instance zinc nitrate) solution, is left in the emulsion or removed by washing with distilled water.[1] As previously stated,

tiveness. Cobaltous chloride has been used for this purpose, von Hübl considering the less expensive zinc chloride equally efficient. It has been found that uncombined silver in a collodion emulsion causes it to be less resistant to strong developers, bromides and other chemicals being added to the developer to prevent blackening ("veiling"). However, exposure of the emulsion to actinic light is also a common source of veiling, for a silver bromide emulsion, containing an excess of either silver, or bromide, even when prepared in actinic light, will become instantly developed in the presence of a weak developer, while the diffused silver bromide is apparently unattacked. Formerly, pyrogallic acid was the universal developer for collodion negatives, but at the present time it has been superseded by "iron" (a ferrous salt), pyrogallic acid being used only as an intensifier after the image has been fully brought out by the developer.

1. In the unwashed process, a "plain collodion" may be prepared either of the strength and in the manner given by the U. S. or British Pharmacopœias, or by dissolving pyroxylin 1 part by weight in a mixture of alcohol 15, ether 30 (parts by volume), filtering if necessary (see Chapter IX). $2\frac{2}{3}$ parts of zinc bromide is weighed out, dissolved in the smallest quantity of ethyl alcohol, 4 or 5 drops of nitric acid being added to dissolve any zinc oxide or carbonate present. The solution should be filtered through a small tuft of cotton if solid particles appear apparently insoluble in alcohol. This solution is then slowly added to one-half the above collodion with vigorous shaking after each addition. Two molecules silver nitrate to each molecule of zinc bromide used is the equivalent combining proportions (zinc bromide 225, silver nitrate 336); in practice 4 parts silver nitrate (allowing the excess practice has shown is necessary) is dissolved in $1\frac{1}{2}$ parts hot distilled water to a clear solution, 9 parts hot alcohol added to the aqueous silver nitrate, and the whole added in portions to the second half of the above collodion. The bromized collodion is then incorporated with the silver collodion, either by adding drop by drop and shaking vigorously, or by adding the bromized collodion by means of a burette in fine drops, meanwhile stirring the silver collodion continually, that the precipitated silver bromide may form in as small particles as possible. When properly carried out, the collodion when interposed between the observer's eye and a candle flame causes the latter to appear a deep orange and approaching a ruby tint. The shade of yellow of the pyroxylin used will modify somewhat the appearance of the tint, being partially masked by a straw-colored pyroxylin solution. The silver nitrate must be in excess, which may be qualitatively determined by adding a drop of either potassium iodide or potassium bichromate solution to the collodion, when a yellow or brick-red precipitate of silver iodide or chromate will appear. After laying aside for 16–24 hours, the preparation is ready for coating purposes. The reason for allowing to stand for some hours before using, apparently has to do with the size of the individual precipitated silver bromide particles. When the emulsion contains an excess of bromides, according to H. O. Klein (Collodion Emulsion, 1905, p. 16) the solution has about one-fifth the speed of wet collodion, whereas emulsions prepared with ammoniacal silver oxide, or with silver nitrate in excess is considerably faster. The process of standing or "ripening" also materially hastens the rapidity, in which the silver bromide particles increase in size by coalescence, (about five times according to Hübl). Klein also has determined that emulsions containing finely divided silver bromide transmit orange-red light, resist development better, and have less tendency to produce veil than those of coarser-grained silver bromide. This may be demonstrated by allowing the emulsion to stand for some time and decanting the supernatant layer containing the finer particles. This will produce clearer negatives and is less sensitive to light. In the washed emulsion process, the silver nitrate, zinc nitrate, ammonium nitrate, and the water introduced with the silver nitrate is removed in the following manner: The pyroxylin may be precipitated by introducing in a small stream into hot or cold water with vigorous shaking, the pyroxylin being thrown out of solution as a bulky amorphous pellicle, which being of a colloidal nature, tenaciously holds a portion of the water. The sensitiveness of the emulsion is somewhat diminished by this

the silver haloid must apparently be precipitated in the collodion mass itself, rather than to precipitate a silver haloid and add the precipitate as such to plain collodion. The interaction resulting in the precipitation of the silver haloid must occur in the collodion substance.[1] The sensitiveness is dependent, in a measure, apparently, upon the size of the individual silver bromide particles, although the sensitiveness may be increased, as stated, either by the addition of tannin-containing compounds, or by the introduction of certain synthetic dyestuffs [2] or alkaloids as narcotine, codeine or apomorphine.[3]

Collodion emulsion may be conveniently divided into two classes—those which do and which do not require color sensitizers, the former finding their use in the production of monochromes, isochromatic collodion emulsion, line and half-tone work, trichromatic and four-color Metzograph screen.

treatment, but may be minimized by using small portions of water, which should always be distilled and as free from organic matter as possible. As there is always a trace of free silver left in the emulsion which acts as an extra sensitizer, the sensitiveness is sufficient for ordinary photographic work. Collodio-chloride emulsion in which chlorides substitute the bromides, and collodio-chlorobromide containing both silver chloride and bromide, are used for transparency work at the present time or for the coating of collodio-chloride papers, mentioned elsewhere in this chapter. For formation of collodion diapositives, see Phot. News, 1899, **43**, 630; Phot. Rundsch., 1899, **13**, 7.

1. Silver nitrate is a bromide absorber from its ability to combine with bromine to an insoluble form, and in this respect is a chemical sensitizer of considerable importance.

2. According to Klein, l.c., p. 16, the active agent in most cases was found to be the alkali "which these substances contained." The organic sensitizers are of value mainly in those collodion emulsions used for opals, transparencies and lantern slides, in distinction to the chemical and color sensitizers, used in process and tricolor portrait and landscape work, where great rapidity and orthochromatism are the desirable requisites.

3. Collodion emulsion may be sensitized for nearly all the spectral colors without losing its general sensitiveness, which may be materially increased by the addition of synthetic dyestuffs. Collodion emulsion may be sensitized with greater accuracy than gelatin dry plates, and von Hübl, who has investigated the phenomenon, finds that the screening defect of gelatin plates is so profound that a complete shifting of the region of sensitiveness occurs, so that the accurate adjustment of the color-sensitiveness of a dry plate is a difficult if not impossible operation. Collodion emulsion, however, is almost free from this defect; the silver bromide particles which are to be colored, is not imbedded in a deeply colored medium, as with gelatin. In orthochromatizing collodion the dyestuffs generally employed are eosine, erythrosine, rose bengal, acridine, uranine, cyanine, nigrosine, chlorophyl, ethyl violet, pinaverdol, homocol, sodium monobromfluorescin, canary II, and the patented sensitizers. For their individual characteristics consult some work like Collodion Emulsion, H. O. Klein. The selection of aniline dyestuffs for sensitizing purposes is delicate and time-consuming work, because ocular spectroscopic tests must be supplemented by spectrographic tests. In general, a dyestuff sensitizes that portion of the spectrum which the dye absorbs, but many dyes showing absorption bands produce no sensitizing action when mixed with emulsions. The sensitized surface for photographic films patented by W. Caldwell (U.S.P. 956567, 1910) comprises a silver halogen salt as the bromide, and an ammonia derivative as formyl hydrazine or hydrazine phosphite or sulphite, in ether-alcohol.

Printing-out Silver Emulsion, may, according to A. Valenta, be prepared by adding to 500 cc. 3% collodion, 10 gm. citric acid in 40 cc. alcohol, 4 cc. 40% aqueous strontium bromide solution, glycerol-alcohol (1:1) 4 cc., silver nitrate 10 gm. in 95% alcohol 40 cc., and ether 80 cc. The citric acid is dissolved in the alcohol, bromide and glycerol next added, and the silver in a deep yellow light. The ether is finally added and the mixture shaken until homogeneous. A harder working emulsion results by adding 0.8 gm. calcium bichromate to the above quantity. Excellent results are said to be obtained by adding 0.4–0.5 gm. calcium chloride. The papers are said to tone well and uniformly in the various baths, print several times as fast as commercial P.O.P., and with but little loss in fixing and toning, except with the emulsion containing chromate.

Collodion Emulsion without Color or Alkaloidal Sensitizers.[1] Although the method of manipulation differs according to the purpose to which it is applied, collodion emulsion may be used for the same general classes of photographic work for which wet collodion or gelatin plates are indicated. The glass plate having been properly cleaned,[2] as a preliminary, a gelatin or rubber substratum may be applied, although some writers prefer to apply the collodion directly to the polished glass plate, using only a rubber solution around the margin to cause the collodion to better adhere to the glass.[3] The plate must be thoroughly dry and perfectly cold, or the collodion emulsion will

1. See "Photographic Sensitive Surfaces," E. Donisthorpe, E.P. 5641, 1908; for making collodion films especially suited to Röntgen photography, see M. Levy, E.P. 10098, 1897; also Phot. Mitth., 1899, **36**, 23; Phot. Rundsch., 1899, **13**, 192. For "Collodion Papers" see Eder and Valenta, Chem. Indus., 1899, **22**, 197; At. Phot., 1902, **9**, 207; Gaedicke, Phot. Mitth., 1893, **30**, 202.

2. Taking sheet glass as received from the dealers, it should be washed with soap to remove dust, then immersed in a hot nascent chromic acid solution, prepared by dissolving 3 parts commercial potassium bichromate in 8 parts hot water and adding 3 volumes sulphuric acid 66° Bé. previously diluted by slowly adding it to an equal volume of cold water and with stirring. Never dilute the acid by adding water to it, but always the reverse. The plates are soaked in this solution for 1 to 3 days, washed and immersed in a 10% caustic soda solution from 1 to 3 hours, rinsed, washed with alcohol and dried. Cleaning pastes should be used with caution on account of liability of scratching the glass. This is especially so with plate glass, whose surface is much softer than that of ordinary sheet glass, due to the fact that the harder exterior portion of the glass has been partially removed as the result of the various operations of polishing. The effect of unclean glass in collodion emulsion is much more apparent than with wet collodion plates.

3. If a substratum is to be placed on the glass to give better adhesion to the collodion, a 1% solution of Para rubber in benzene flowed over the glass and in 5% strength for edging is satisfactory, or albumen 2% with a trace of ammonia. Klein (l.c. 37) finds most reliable, gelatin 50 gr., acetic acid 3 oz., warmed until dissolved and one-tenth of the following added: water ½ oz., chrome alum 10 gr., to which is added 70 parts methylated spirit, when the substratum is ready for use. It is stated that the presence of the acetic acid causes considerable decrease in sensitiveness, especially noticeable in emulsions sensitized with ethyl violet. The coated plates are placed with their faces together with bibulous paper between until ready to be collodion coated.

either evaporate unevenly or too rapidly, or fog due to partial precipitation of the pyroxylin by the moisture present.[1]

Preliminary to coating the plates, the emulsion is well shaken for several minutes in the dark room in order to disseminate uniformly the silver halide in the collodion mass. After shaking, the solution should stand for five to ten minutes in order to allow the entangled air bubbles to rise. On the assumption that the reader is unacquainted with a method of coating the plate with collodion, it may be said that one satisfactory way is to hold the plate in a horizontal position by means of a pneumatic plate-holder, dust the surface carefully with a camel-hair brush to remove all organic particles, then pour the emulsion in the center of the plate, tilting the plate backward and forward until the whole surface has been uniformly covered, when the excess of emulsion is preferably run into another bottle.[2] As soon as a film has formed over the surface of the emulsion (the glazed surface of which can readily be seen by reflected light) the plate is ready for color sensitizing, or if in monochrome, it is placed in the dark slide, and is ready for exposure.[3] Commercial collodion emulsion in its plain state, without color sensitizers, will keep several years without serious impairment, even when sensitizing dyestuffs are present. If, however, certain silver dyestuff combinations such as silver eoside are present, the emulsion will keep but a few days or hours, depending on the atmospheric temperature, and to a less degree upon the humidity.[4]

1. As the addition of certain dyestuffs has a tendency to cause the film to detach itself from the glass support, a substratum is especially desirable in those emulsions containing dyestuffs. With E. Albert's emulsions, the presence of picric acid in the sensitizer obviates this tendency. Where plates are developed with hydrochinon (hydroquinone), a substratum is indicated on account of the hydrochinon causing specks, scratches and other imperfections in the glass to be much more conspicuous. Klein recommends a mixture of hydrochinon and glycin for ordinary polished glass, and for half-tone, hydrochinon alone, but with a substratum.

2. The plate should be tilted slowly and evenly so as to produce a film of uniform thickness over the entire plate surface. The "pouring on" and "pouring back" bottles should be neither cork-stoppered on account of liability of cork dust entering the solution, nor of rubber on account of the solvent action of the ether thereon.

3. The dark slide should be kept scrupulously clean, and especial care should be taken to keep it free from emulsion drainings. Dark slides which have been used in wet collodion work should not be used for emulsion slides, on account of the danger of contamination from the dry silver nitrate forming silver iodide spots.

4. Collodion emulsion retains its sensitiveness unimpaired much longer when kept at a low temperature, whereas the newer sensitizers, pinacyanol, pinaverdol, homocol, ethyl violet and diamant black when mixed with emulsion materially aid in the keeping qualities of the latter, and at the same time the emulsion gives clear working qualities. E. Albert has introduced a developer which produces greater density and extremely brilliant negatives, but the solution does not keep very well. It is best prepared in a concentrated stock solution which is mixed afterward and diluted with nine volumes of water before using. The solutions are: sodium sulphite 10, potassium carbonate 8 in distilled water 20; hydroquinone 1 in water 4; and ammonium bromide 1 in water 4 (all parts by weight). By increasing or decreasing the quantity of hydroquinon the density may be

The usual developer is glycin in the proportions and order here stated. Sodium sulphite 5 is dissolved in hot distilled water 8, glycin 2 added and finely dry potassium carbonate 10 (all parts by weight). This stock solution, which will keep indefinitely when well stoppered, is diluted with 10–12 parts of distilled water before use.[1] The plates may also be fixed with sodium hyposulphite (thiosulphate) and potassium cyanide, and by a number of other combinations if desired, but irrespective of the developer used, the plates should always be washed before development, because the alcohol-containing surface acts as a repellent to the aqueous developer solution, and may cause the appearance of streaks. After development, fixing and washing, the collodion plate is dried, and finally coated with a protective resin varnish.[2 3]

varied within wide limits. Edinol and hydroquinon produce a satisfactory developer in the following combination: acetone sulphite 4, potassium carbonate 16, water 40, hydroquinon 3, edinol 2, ethyl alcohol 20, and water 20. The edinol is dissolved separately in the alcohol and added to the other ingredients previously dissolved, the potassium carbonate being dissolved first. The third solution is 50% aqueous potassium bromide, which, however, may be dispensed with, and still produce clear results. In practice 10 parts of the first, 1 of second and ½–1 part of the last solution are mixed with 125–150 parts of water.

1. The image on a properly exposed plate will appear in about forty seconds with the hydroquinon developer and in about half that time in the glycin developer. Intensifiers, accelerators, or restrainers are of but little value in collodion emulsion work in a correctly exposed plate. The excellent and clear negatives produced by hydroquinon and so desirable in process work, are objectionable in other work, as for instance in the tone reproduction of pastel or an oil painting. Glycin yields softer and more subdued negatives, especially when highly diluted and allowed to act for a correspondingly longer period. H. Klein feels that "the complaint often made that emulsion negatives are hard and devoid of detail in the shadows is not justified, because the softest and best-graduated negatives have been made with emulsion by proper choice of developer and sensitizer."

2. The solvent of the resin must be a fluid that is a non-solvent of pyroxylin. A fusel oil solution of shellac, the latter having been purified from wax according to Field's process previously described, makes a transparent, hard, and lustrous coating and one that wears well.

3. **Defects and Remedies in the Foregoing Processes.** The defects in collodion emulsion plates and wet collodion photography are usually traceable to well-defined causes, and the result of lack of attention to detail or uncleanliness. Fog on the plate may be caused by improper screening of the lens during exposure, the admission of extraneous light by other means, or dust on the lens. These defects are more apparent, the longer the exposure, especially in warm weather, when a portion of the plate may become dry. When this occurs, there are apt to appear certain places more transparent on development than those portions where the film has been kept wet. Where the silver bath has accumulated considerable alcohol through long or continued use, this effect becomes more apparent. The tendency of the film to dry may be inhibited by placing at the back of the plates a few pieces of red blotting paper during the exposure period. Where the exposure has been long it probably is best to place the plate again in the bath for one-half to one minute just before development. If the coating solution has not been uniformly flowed over the plate, lines or streaks may appear, and the film become repellant from alcohol in the film solution. A larger amount of developing solution should then be taken, to which a small amount of alcohol has been added. The developing solution should not be poured on the plate in a stream, on account of danger of washing the silver nitrate away at the point where the developer strikes. Where an excess of developer is used, and is rocked over the

Collodio-Chloride Process, perhaps more properly called "Collodio-Citro-Chloride Process," which was introduced by G. W. Simpson in 1864, and which in works published ten years ago was referred to as obsolete, is at the present time quite extensively used. The points of advantage where the emulsion is applied to paper are: the paper may be blotted off when taken from the washing tank, which is quite an unsafe procedure with the gelatino-chloride process; the paper may be dried without danger at a low heat; does not crack when dried carefully and kept under pressure, and gives dependable results. An improvement on Simpson's earlier formula is as follows: silver nitrate 28 gm., ethyl alcohol 100 cc., collodion 800 cc., strontium chloride 4 gm., lithium chloride 2 gm., citric acid 7 gm., ether 100 cc.,

plate, it will dissolve a portion of the silver and result in a thinner negative. If the image is slow in appearing and when finished appears thin, the plate is probably under-exposed. Conversely, if the image appears quickly and is hazy, over-exposure has been made. Peculiar "horseshoe" markings appearing on the finished negative are usually attributable to drops of the developing solution having been allowed to dry on the plate, or the sensitive solution on the back of the plate during exposure. If the film is insufficiently washed "intensification fog" may appear. A red stain forming upon prolonged intensification is usually removable by the application of dilute acetic acid. Imperfect fixation and incomplete washing always result in fading or staining. In intensifying with acid pyrogallol and silver nitrate the latter should be carefully adjusted in amount, an excess of silver causing more rapid intensification, and a greater final density, This causes a variation in the negative as regards relative contrasts, i.e., where a large amount of silver nitrate is used at once, the negative contrasts when intensified will be less than where small quantities are employed, or where the operation takes place more slowly. Blisters in the film may be due to imperfect substratum coating, the presence of a preservative, especially of those containing saccharine or mucilaginous matter, or those preservatives, which like coffee or gallic acid solutions, are high in tannin compounds. In negatives properly fixed with "hypo," defects are seldom. Where potassium cyanide is used, a reduction in density often occurs, due to the solvent action of the cyanide on the silver. Black spots forming on development are usually the result of organic particles (dust), incompletely filtered pyroxylin or substratum media, pin holes or bubbles in the glass, or uneven and irregular deposition of silver halide. Crape markings in the film are often the result of a too aqueous emulsion solvent, and incipient gelatinization of the pyroxylin, or to the fact that the emulsion has been recently disturbed, and large granules of silver halide poured onto the plate. If the emulsion refuses to flow properly, the viscosity is too high. This is due either to the employment of a pyroxylin of too high viscosity, incomplete solubility, or the solvent portion is so high in non-solvent that the pyroxylin has begun to gelatinize. Concentration of the emulsion through solvent evaporation must be distinguished from a too viscous pyroxylin. The sensitizing bath should always be acid (with nitric) in order to guard against fogging from precipitation of silver oxide from alkaline soluble silver combinations. In hot weather circular insensitive patches sometimes occur in the center of the negative traceable to the pneumatic holder used. Fog may also be caused by insufficient free iodine in solution in the collodion, which should be of a deep sherry color, to give the most satisfactory results. To correct this deficiency a small amount of an alcoholic solution of iodine may be added. Excess of acid results in negatives deficient in detail and in insensitiveness. Excess of iodine causes acidity by withdrawing silver by precipitation, thus leaving free nitric acid. If too long a period intervenes between withdrawing the plate from the sensitizing bath and development, due either to too long exposure or delay in development after exposure, the plate after exposure should be momentarily immersed in the sensitizing bath, then withdrawn and immediately developed.

glycerol (to prevent cracking upon drying) 10–15 cc. The emulsion is flowed over paper, observing the precautions previously stated in plate coating. The enameled paper such as is used for heliotype or lithography is satisfactory. A paper somewhat larger than the print required is taken, the edges turned to form a tray with a spout at one corner, and the paper put on a glass plate before pouring on the collodion. After the emulsified collodion has been uniformly distributed over the paper surface, the excess is poured off, and the paper allowed to dry—still (of course) in the dark room. To impart additional brilliancy to the resulting print, it is recommended to blow ammonia fumes over the surface of the paper. The print may be toned in the regular manner, the following bath, made in two solutions imparting dense, opaque, inky tones. No. 1. Ammonium sulphocyanide 2, sodium thiosulphate (hypo) 1.5, sodium carbonate (dry) 0.5, water to 700 (all parts by weight). No. 2. Gold trichloride 1, chalk 20, water to 700 (parts by weight). Equal quantities of 1 and 2 are mixed and the print toned from three to ten minutes, the bath being used but once. By mixing unwashed collodio-bromide emulsion 2 parts, and unwashed collodio-chloride emulsion 1 part, a "collodio-bromo-chloride emulsion" results, which combines many of the advantages of bromine and chlorine in emulsion combinations.[1]

1. Y. Schwartz (E.P. 9992, 1902; U.S.P. 710019, 1902; 962788, 1910; F.P. 320451, 1902; 378305, 1907) uses a solution of pyroxylin in acetone or amyl acetate to prepare a collodion which penetrates into the paper. The solution recommended is composed of pyroxylin 19 gm., 99% acetone 1000 cc., amyl acetate 875 cc., and benzene 875 cc. The paper is coated with this solution in such a manner that for each square meter of paper, about 70 cc. solution is used. The resulting paper is said to be very strong and somewhat transparent, being thus especially adapted for the manufacture of silver bromide paper. See J. Wellington, E.P. 14274, 1893; 11821, 1895.

The Vollenbruch process of preparing collodion paper consists in combining strontium chloride 2 gm., citric acid 4 gm., lithium chloride 1 gm., glycerol 6 cc., silver nitrate 14 gm., ether and alcohol each 50 cc., 3% collodion 400 cc. The silver nitrate is dissolved in 4 cc. water, added to 25 cc. alcohol, and then this to half the collodion. The strontium and lithium chlorides are dissolved in the smallest amount of water and added to 12 cc. alcohol. The citric acid is dissolved in the remaining 13 cc. alcohol. The silver and acid-containing collodion are mixed with continual shaking, finally adding the ether and glycerol. After being allowed to stand for some hours, the emulsion is filtered. E. Vogel's process consists in dissolving 1 gm. lithium chloride, 0.6 gm. strontium chloride and 1.5 gm. citric acid in 2 gm. warm distilled water, adding 50 cc. alcohol, filtering, and pouring into 500 cc. 4% collodion. In Heiderstadt's method 0.2 gm. lithium chloride and 1.5 gm. citric acid are dissolved by gentle heat in 50 cc. alcohol, 500 cc. 4% collodion added, and this shaken together with 15 gm. silver acetate previously dissolved in 7 cc. water and 150 cc. alcohol added. According to Brit. Jour. Phot., 1902, 49, 101, ordinary collodio-chloride paper, prepared with the chlorides of calcium, strontium and lithium give brownish colored prints bearing the strongest resemblance to English "cold bath" platinum paper. A method of preparing collodio-chloride paper for platinum toning is given, in which the calcium chloride in the emulsion is reduced to a very small amount (quantity not stated), its place being taken by an alcoholic solution of hydrochloric acid. As the latter com-

Collodion Dry Plates for Acid and Alkaline Development which were in common use previous to the introduction of the collodio-bromide and collodio-bromo-iodide processes, are of especial value in copying line work and in the preparation of lantern slides. It is less useful in process work. These dry plates are about one-fourth as fast as bromo-iodized collodion with the ferrous sulphate developer, but the results obtained are uniform, the method is clean, and if the image is developed by an acid developer so that the silver is deposited upon the surface rather than in the interior of the film, the quality of film produced is favorably comparable with that produced by the wet collodion process, which it much resembles. By so-called "chemical development" of the image with an alkaline developer, the latter is formed within the film substance, similar to collodio-bromide emulsion or gelatino-bromide plates. Alkaline development possesses the advantage of allowing of the conversion of a negative image into a positive, so that a half-tone transparency positive may be obtained directly from the "copy." This is especially valuable in the preparation of intaglio printing plates.

On account of the ease with which these plates may be formed, lantern slides may be prepared upon glass of the desired size and developed up to the edge of the plate. The plates are prepared by flowing on iodized negative collodion containing 0.2 gm. cadmium bromide per ounce of iodized collodion, the latter having been aged to a light amber color. Iodized collodion so old as to be useless for wet plates gives satisfactory results. If the ordinary wet plate silver bath is used, it should be made distinctly acid with nitric or acetic acids. The plates are to be sensitized by immersion in the silver bath from five (in summer) to ten (in winter) minutes, depending on the temperature of the room.[1] After draining, the plates are thoroughly washed with

bines with silver to liberate nitric acid, the usual free nitric acid present is partly replaced by ammonium nitrate. In emulsions containing 18–20 gm. silver nitrate per l., 60% of which exists in the form of "ammonio-nitrate" produces a very sensitive paper of good graduation and keeping qualities. As compared with gelatin paper, it is claimed that collodion-coated paper gives purer whites and as fine a surface as with albumen. G. Moss has recommended zinc chloride instead of strontium chloride on account of its ready solubility in alcohol, no water being necessary to effect its solution. See G. Macaire, E.P.22152, 1899. For collodio-chloride emulsion see Sci. Am. Suppl., 1900, 50, 20808; Jour. of Phot., 1900, 47, 599.

1. A silver bath may be made from 7% silver nitrate in distilled water to which 1 drop conc. nitric acid per ounce of solution is added. The bath should be kept the full strength of silver by frequent additions of silver nitrate. With increase of neutrality, there is a corresponding increase in sensitiveness. The sensitized film will appear more opaque from the silver halide precipitated therein, and must be washed in distilled water until all uncombined silver has been removed. Traces of soluble salts cause stains from reduction by the tannin, when the subsequent preservative solution is added.

distilled water, in at least five changes of five minutes' immersion in each, and are then covered with distilled water, in which they are immersed until used. The films are thus like those of a collodio-bromide emulsion and are manipulated similarly.

Manufacture of Collodion Photographic Films is conveniently divided into (*a*) preparation of the collodion film, and (*b*) deposition of the sensitive emulsion thereon. As has been stated in Chapter XIV under "Celluloid Sheets and Films," the first photographic pellicles were formed by pouring a pyroxylin solution upon a hard polished surface—usually glass—and after solidification through evaporation of the fluid portion, the film was peeled off and served as the support upon which the sensitive layer was imposed. But the early difficulties in the art of film making are traceable to the central thought in the advancement of the nitrocellulose industry—the inapplicability of the solvents used—the result being that the films were irregular, warped, buckled and were uneven in thickness and ragged in contour. Henry Reichenbach in his U.S.P., issued in Dec., 1889, made the first application of the use of a solvent of pyroxylin that was not highly hygroscopic to the production of a photographic film, in which the speed of evaporation was inhibited by the presence of fusel oil. This formula of wood alcohol, camphor, amyl acetate and fusel oil may be regarded as the most satisfactory solvent combination which had been proposed up to that time. Reichenbach evidently recognized that by a suitable combination of solvents, solutions could be produced that would flow fast or slow, set rapidly or slowly, and impart distinct properties to the resulting film, and the industry was given its first modern impetus, when it was placed on a substantial footing soon after, by the utilization of the discovery of the value of amyl acetate by its use in film production by Hannibal Goodwin. Through his employer, G. Eastman, the patent of Reichenbach was extended to England,[1] in which both formulæ and processes are described, and by means of which immense quantities of satisfactory photographic films are said to have been produced. The apparatus consists of a long bed-plate of polished plate glass over which travels in a longitudinal direction the spreading apparatus, consisting of a hopper holding the solution, and a transverse spreading blade made in sections and fitted with automatic adjusting mechanism to compensate for any deviation of the bed-plate from a true level. Over the plate slides a light cover which protects the film from dust during evaporation and also enables part of the solvent to be recov-

1. E.P. 19896, 19897, 1889; 19658, 1890; 7501, 1892; abst. J.S.C.I., 1890, **9**, 547, 651; 1891, **10**, 159; 1893, **12**, 464.

ered, the vapors being withdrawn from under the hood by means of an exhaust fan placed at one end. The machine is also provided with an apparatus for cutting the film into narrower strips and reeling the latter off on spools. When the film is to be used as a support for gelatino bromide or similar emulsion, it is coated while still on the bedplate, to which it adheres quite firmly. After the emulsion has set and dried, the coated film is cut and reeled off. The formula for film manufacture published by Crane that same year [1] consisted of methyl alcohol 40, amyl acetate 20, amyl alcohol 40 (all gal.), pyroxylin 50 lb., or for a viscous solution 55, 25, 20 gal. and 100 lb. of the above-named constituents together with 50 lb. camphor. His method was to spread a viscous solution over the carrier by means of a knife or straightedge, the thickness of the film being regulated by the spreader. J. Swan and J. Leslie [2] prefer to spread the collodion on a gelatin surface, from which the film is stripped very readily when dry.

The method of preparing films perfected by E. Todd [3] is essen-

1. E.P. 10393, 1889; abst. J.S.C.I., 1890, **9**, 892. According to Dr. E. D. Williams (Sabin's Technology of Paint and Varnish, p. 113) "the Eastman Kodak Company is said to use a formula for film manufacture consisting of 97% methyl alcohol 65%, fusel oil 25%, and amyl acetate 10%, with pyroxylin 16 oz. per gal., the lacquer being spread on glass plates previously coated with a thin film of paraffin." Under the name Quinone A, a formula consisting of amyl acetate 20 gal., amyl alcohol 11 gal., benzine 71° 4 gal., and pyroxylin 24 oz. per gal. has found extensive use as a lacquer for the preparation of films. The ready volatility of the benzine 71° Bé. gives a preponderance of pyroxylin solvent at all stages of the evaporative process. Meister, Lucius and Brüning (E.P.15355, 1899) dissolve 1.8 parts pyroxylin in 16 parts by weight of glacial acetic acid by heat and stirring and add gelatin 5 parts. After this has swelled, 7.5 parts by weight of 96% ethyl alcohol is added with stirring. The syrupy product is then poured on glass plates to form films. To render the film opaque to X-rays (U.S.P. 753310) red lead 10, glue and glycerol 1 each and rubber 0.1 part may be incorporated. In the author's experience amyl acetate 30, refined fusel oil 12 and pyroxylin 2.5 (all by weight) produces a rather expensive but very satisfactory composition for plate coating or film formation. Patat (F.P. 361954, 1908) prepares a transparent composition for making films composed of amyl acetate 45 cc., denatured alcohol 50 cc., castor oil 5cc., celluloid 5–6 gm. To enamel paper, coat it until a gloss is obtained, dry, and dip the enameled paper into a solution of amyl acetate 30 cc., denatured alcohol 65 cc., castor oil 5 cc., resin 90 gm., celluloid 30 gm. To apply metallic powder use amyl acetate 50 cc., denatured alcohol 50 cc., sandarac 40 gm. According to Y. Schwartz (F.P. 320452, 1902) the paper is treated with a solution composed of 19 gm. of nitrocellulose, 1 l. of 99% acetone, 875 cc. of amyl acetate, and 875 cc. of benzene, which is applied to the extent of 70 or 80 cc. per square meter. This composition is said to protect the paper itself from the photographic reagents and to cause the sensitive emulsion to adhere well. For platinum toning of celloidin paper see Phot. Rundsch., 1903, **17**, 26; Phot. Mitth., 1893, **30**, 351.

2. E.P. 9893, 1890; abst. J.S.C.I., 1891, **10**, 792. See also Kuhn, E.P. 6921, 1891; abst. J.S.C.I., 1891, **10**, 787; Balagny, E.P. 4178, 1890; abst. J.S.C.I., 1891, **10**, 572. Berlin Aniline Co., E.P. 925, 1904. As an aid in distributing the pyroxylin solution uniformly, see the device of E. Mertens, E.P. 17199, 1904; D.R.P. 125917.

3. U.S.P. 428654, 1890; E.P. 9315, 1890; abst. J.S.C.I., 1890, **9**, 1060. Pefer (F.P. 359768, 1905) produces photographic proofs positive as to light and shade and also, if desired, with respect to the position of the subject, on a single special

tially different from the foregoing. Instead of flowing collodion over a horizontal rigid support, use is made of the apparatus shown in Fig. 260, in which *a* is the tank or receptacle containing the collodion,

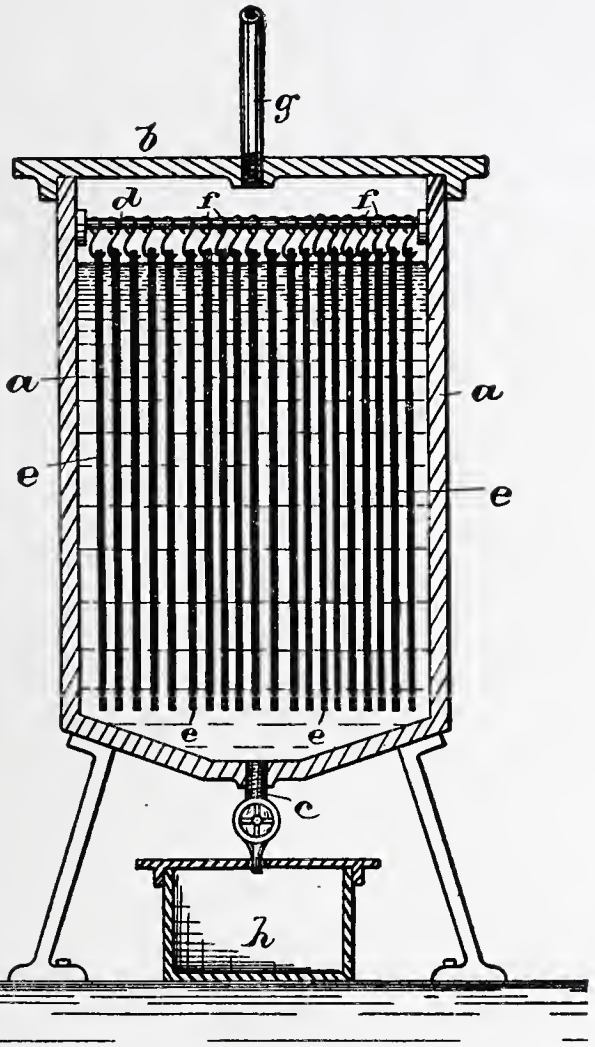

Fig. 260.—Preparing Collodion Films according to Todd.

provided with a removable cover *b* at the top to prevent evaporation. Within the receptacle is arranged one or more bars upon which

sensitized surface in one operation, consisting in coating celluloid with a substance relatively opaque by reflected light and transparent to transmitted light. W. H. Caldwell (E.P. 1689, 1908) forms sensitive surfaces on which images can be produced either by long exposure only, or by short exposure and subsequent development. To attain this result, a substance must be present which is not reduced by light after its oxidation by the liberated halogen; which will not reduce the silver salt used, in the dark; and which will absorb the halogen as rapidly as it is set free by light. Certain salts of hydrazine and hydroxylamine, or their derivatives, fulfill these conditions, such as hydrazine sulphate, sulphite, or phosphate, or a

are suspended glass plates. The collodion is gently poured into the coating receptacle until the plates of glass are entirely immersed, the solution allowed to remain at rest until all air bubbles have arisen, when it is withdrawn by opening the spigot *c*. The speed with which the collodion flows out governs the thickness of film deposited on the glass plates, it being obvious that the faster the collodion flows into the receptacle *h* the more attenuated the deposit on the glass will be. The plates are also effectually protected from the deposition of dust while in the moist state. After the solution has been run out and the plates dried, the collodion is peeled off in any convenient manner.

In the more recent process of J. H. Smith [1] two component films are prepared by coating upon an appropriate smooth support a gelatin solution, and after drying coating again with a solution of nitrocellulose; when the double films are dry they are stripped from their support, the gelatin surfaces brought together in a slightly moist condition, squeezed together, and thus brought into intimate combination. The process, therefore, produces films composed of an inner double gelatin film with a protecting coating of nitrocellulose on either side, which will withstand the action of developing baths with little tendency to curl. The inner gelatin layer reduces the cost of the film, the total diameter of which is about 0.005 inch. A sensitive photographic emulsion, as described in a subsequent patent,[2] may be

salt of a fatty hydrazine or hydroxylamine; when a collodion emulsion is used, formylhydrazine may be employed. The substances named may be added to the emulsion before its application to the support, or an ordinary plate, film, or paper may be immersed in a solution of the substance. T. Bolas (U.S.P. 964483, 1910) makes pyroxylin films for carrying photographic emulsions by treating a thin sheet with a spray of solvent, supporting until dry, subjecting the dried sheet to a gelatinous solution to smooth it and reversing it upon the support to smooth the face of the sheet.

1. U.S.P. 886883, 1908; E.P. 10372, 1905; abst. J.S.C.I., 1905, **24**, 1083. To use the minimum of collodion, J. Bourdeaux (F.P. 401912, 1909) first coats with gelatin, then with collodion, the gelatin having previously been rendered insoluble by treatment with formaldehyde. For F. Rowell's method of coating celluloid plates see U.S.P. 415566, 1889. For applying carbon prints to metallic surfaces, see L. Favré, E.P.18016, 1889.

2. J. H. Smith, F.P. 273906, 1907; E.P. 1454, 1907; U.S.P. 923589, 1909; E.P. 10372, 1905; abst. J.S.C.I., 1905, **24**, 1083; 1907, **26**, 779; 1908, **27**, 592*r*. The film process of F. Crane is described in E.P. 10393, 1889; that of G. Eastman, E.P. 19896, 19897, 1889. According to the method of J. Findlay (E.P. 5948, 1904) a non-inflammable base or support for use in preparing "flat" or "roll" films for photographic purposes may be prepared as follows: 7¾ k. of glacial acetic acid containing 90 gm. of chloral hydrate are warmed with 1 k. of mono- or di-nitrocellulose and 2.5 k. of clear, hard gelatin or glue until solution is complete. Eight l. of a 2% solution of equal parts of gum dammar and gum storax in 70% alcohol are then incoporated with the solution, and the mixture is poured into suitable molds or onto slabs. When the sheets or films are dry, they are rendered non-inflammable by immersion in an alkaline solution of shellac, prepared, for example, by dissolving one part of borax and one part of shellac in 10 parts of water.

applied to the finished film, and the triple film then stripped from its support.

In removing a negative film from a collodion support, it has been found [1] that the ordinary nitrocellulose solvents when diluted with water to a certain point have no solvent action, but cause the nitrocellulose to swell and become soft. For instance, if a " film negative " be immersed in a mixture of alcohol and ether each 50, and water 15 parts, the film after a short time can be readily and safely peeled from the support. Fatty alcohols, ethers and acetone are suitable also for this process, provided the solvent is miscible with water. To separate photographic gelatin films from celluloid supports [2] the celluloid negative is soaked in a solution of one part of amyl acetate or acetone in six parts of water, which penetrates the gelatin film and attacks the celluloid support, thereby loosening the film, which may then be stripped or floated off onto a glass plate and dried. If " enlargement " of the film be desired, an acid, preferably citric, tartaric, or acetic, may be mixed with the above solution, or, the stripped film may be treated with the acid in a second operation, suitable chemicals being employed to preserve the density of the image.

Of the various processes for reducing the inflammability of photographic films, in addition to those mentioned in Chapter XIV are the methods of C. King and R. Jellicoe [3] which depend upon the incorporation of sodium tungstate or alum, the method of G. Fry [4] in which formaldehyde-gelatin forms the support, and the more recent patents of L. Labbe and V. Pauthonier.[5] In the latter, waxed paper is coated with collodion and a film of gelatin is applied to it. One half of the resulting composite film is washed with water to remove the alcohol and ether from the collodion, when it is fixed to the other part of the film and the whole hardened with formaldehyde. The complete film is then passed through an aqueous solution of albumin and glycerol (which produces a coating only on the washed side of the film), dried, and coated with a sensitive emulsion. The denitrated pyroxylin films have not given general satisfaction in the trade, due to their brittleness and lack of strength and suppleness. This is especially

1. F.P. 233266, 1903.
2. A. Barratt, Esher and A. Hull, E.P. 19810, 1893.
3. E.P. 24695, 1893; see also O. Fulton and M. Gillard, E.P. 23059, 1899; M. Jolles and L. Lilienfeld, E.P.11053, 1897; M. Bry, E.P. 24774, 1904; M. Bauer, E.P. 28284, 1902.
4. E.P. 12818, 1902. H. Lüttke (E.P. 24955, 1902) renders pyroxylin films pliable by the addition of 15–30% of trinitroglycerol.
5. F.P. 381637, 1907, and First Addition thereto dated Nov. 5, 1907. To prevent halation (Bremer Trockenplatten Fabrik B. Klatte, F.P. 390572, 1908) the emulsion is applied to a sheet of glass, celluloid, etc., deeply colored, e.g., green, by means of chromium salts.

noticeable in continuous films, the "life" of rolls prepared from denitrated nitrocellulose being much shorter than if the nitrogen had not been abstracted. The processes of G. Wood,[1] G. Balagny,[2] E. Foxlee,[3] J. Acworth,[4] H. Kuhn,[5] J. McDonough,[6] A. Huck and L. Fischer,[7] and O. Moh, A. Hesekial and J. Grünewald [8] offer nothing radically novel.

After the sensitized film has been exposed and developed, it is customary to protect the film from staining by contact with silver during printing, by coating with a 5 or 6 oz. pyroxylin lacquer. If the negative has received a collodion coating to prevent frilling, it will be unnecessary to give it another.[9] All collodion films exhibit a tendency to curl and wrinkle, more apparent in the longer lengths (roll films). This may be counteracted by coating the plain or uncoated side with a thin layer of gelatin, which results in producing a film much more tractable. Such films are designated in the trade as "N.C." (non-curling). A photograph produced by the collodion process is called a "collodiotype."

Film Negatives. Perhaps the most important use of film negatives is in connection with the preparation of a collotype printing plate, which requires a reversed negative, such as may be produced by stripping a negative from a rigid support. Printing can thus take place from either side. While this reversal is possible by means of taking a direct negative with a reversal mirror, such negatives are required to be made upon flawless plate glass in order to obtain flatness of field, or a lack of definition is apparent in the finished print. Again, in those instances where a number of impressions are printed

1. E.P. 13191, 1890.
2. E.P. 4178, 1890.
3. E.P. 3393, 1890, Patent Refused. See Foxlee, Brit. Jour. Phot., June 28, July 5, 19, 25, Aug. 2, 1907.
4. E.P. 13836, 1890.
5. E.P. 6921, 1891. For machine for spreading collodion emulsion on paper, see Frenzel, Papier Ztg., 1889, **24**, 903; see also W. Papierf., 1906, **37**, 3330.
6. E.P. 5597, 1892.
7. E.P. 17311, 1902; see Dugour, F.P. 392505, 1907.
8. E.P. 24750, 1898; for manufacture of self-detaching photographic films, see Soc. M. Bry et Cie, F.P. 345535, 1904, and First Addition thereto dated Nov. 2, 1904.
9. "Enamel Collodion" composed of seed lac, pyroxylin, ether and alcohol has been recommended for this purpose. Another formula is: Alcohol (sp.gr. 0.82) 48 oz.; ether (sp.gr. 0.72) 84 oz.; pyroxylin 1 oz.; castor oil 10 minims. For production of ornamental designs on windows, carriage lamps, etc., by means of enamel collodion, see D. Scotellari, E.P. 3753, 1880. M. Frank (Wiener Mitth., 1907, 399; C.A., 1908, **2**, 512) gives five formulas for protective negative varnishes, of which the following "zapon" formula is typical: 70 cc. amyl acetate, 70 cc. benzol, 35 cc. acetone, 2 gm. pyroxylin. "For Varnishing Celluloid Negatives" see Jour. of Phot., 1892, **39**, 115. "Transfer Collodion" consists of alcohol 10, ether 5, pyroxylin $\frac{1}{4}$, castor oil $\frac{1}{4}$ (all oz.). "Leather Collodion" is 2% collodion 100 parts, castor oil, 4 parts.

upon one collotype plate, the varying thickness of glass negatives would render the work difficult if not impossible to obtain "sharpness" and uniformity of outline. Another point in favor of film negatives are their flexibility, ease in storing, and ready transmission from place to place.

A film for collotype printing should be free from brittleness, uniform in thickness, and the quality of the negative must not be affected by the method of removal from the glass. Films may be used in any process where perfect contact between negative and rigid printing surface is possible, and is especially useful in printing upon zinc or copper when the metal is to be etched. Film negatives are best stored in dust-proof boxes in a dry place, laid flat and separated by smooth paper.

Stripping Collodion Negatives. When thoroughly dry, soak with 2% india rubber in benzene, then dry, and flow with a 3% pyroxylin solution in equal volumes ether and alcohol, to which has been added 1% castor oil. The negative is cut around, soaked in 10% aqueous acetic acid until the film can be lifted, when the negative is stripped off and dried without wrinkling. Mawson and Swan have introduced the "Lotos stripping film," for stripping collodion negatives. After the plate has been throughly cleaned and the negative made, a piece of "lotos" film is soaked in a dish of cold water in contact with the collodion negative. After a few minutes, the negative and film may be lifted out together. After draining and warming carefully in order that the gelatin in contact with the collodion film may liquefy sufficiently to become adhesive, the film is dried. Finally coat with plain collodion, cut around the edge and strip. Roy's method of stripping from glass or celluloid is first to harden, for from five to fifteen minutes, the negative in a 4% formaldehyde solution containing 2% glycerol. Rinse thoroughly, dry, cut through the gelatin all around and soak in 20% crystallized sodium carbonate for fifteen to twenty minutes. Next immerse in 1% hydrochloric acid until the film commences to detach, the latter being then transferred to a clean glass plate and cautiously dried.

Continuous Photographic Films. These do not differ from sheet films prepared in the manner just described, except in the mechanical arrangements, and since roll-film photography, and the growth of chronophotography ("moving pictures") has recently developed into such prominence, the various meritorious methods which have been proposed from time to time will be described somewhat in detail. As in other branches of the nitrocellulose industry, development was hampered by a lack of suitable solvents, and this

was conspicuously apparent in attempts at producing continuous pyroxylin films. When Stevens patented amyl acetate in December, 1882, this opened new possibilities in the pyroxylin lacquer and imitation leather industries, as has been noted, and rendered their advancement swift and sure. The Celluloid Company in Newark formed a Krystalline Company to exploit the possibilities opened up by the recognition of the value of amyl acetate in conjunction with cellulose nitrate, and it is not surprising, therefore, that probably the first person to make and patent a satisfactory continuous photographic film, should be a citizen of Newark, Rev. Hannibal Goodwin. Many patents had been issued [1] to Goodwin for the formation of photographic plates and surfaces, from which it appears that Goodwin's knowledge of photographic processes and technique was extensive. He filed in the U.S. Patent Office on May 2, 1887, an application for a "Photographic Pellicle and Process of Producing Same," which was held up until September 13, 1898, and was then granted as U.S.P. 610861. The object of Goodwin's invention is clearly set forth as intending to primarily provide a transparent sensitive pellicle better adapted for photographic purposes, especially in connection with roller cameras, and he claims to be the first to produce a continuous cellulose nitrate film, basing his assertion on claims 9 and 10 of the patent above referred to,[2] his process admitting "of its being made in lengths of indefinite extension . . . and of length sufficient to receive a multiplicity of impressions."[3] No mechanical method for preparing such plurality of coats and in continuous lengths is given.

Two years after Goodwin had filed his application, and nine years before his patent was granted—and hence nine years before Good-

1. U.S.P. 444951, 444952, 459136, 459137, 1892; 509124, 1893; 600688, 610398, 1898; 670277, 1901; 700140, 1902; 517275, 1894; 570728, 574147, 1896. Being a resident of Newark, presumably Goodwin soon heard of the value of amyl acetate as a solvent. Important connecting point. The discovery of amyl acetate rendered possible the manufacture of an acceptable continuous photographic support, and Goodwin patented a photo support which utilized the valuable properties of amyl acetate.

2. Legally, it has yet to be decided finally as to the priority of Goodwin's patents, applied for May 2, 1887, granted Sept. 13, 1898, Serial No. 236780, or H. Reichenbach's patent, applied for April 9, 1889, granted Dec. 10, 1889, Serial No. 396575, but the art would be unaffected, irrespective of the outcome of any litigation. Goodwin mentions the use of amyl acetate and apparently realizes the immense importance which water plays in the formulas for making the films. He combines the solvents and non-solvents in such a manner that upon evaporation of those solvents (methyl and ethyl alcohol with ether or acetone) of lower boiling-points than water, with those of higher (amyl acetate, nitrobenzene) there is sufficient of the non-hydrous and non-hygroscopic elements present to remain until all traces of water have been expelled from the hardening film. He distinguishes between "eventual" and "final" solvents, as those still remaining after the evaporation of the water, as distinguished from the "hydrous" solvents which escape, leaving the water behind.

3. U.S.P. 610861, 1898, lines 205, 206, 209, 210.

win's process became public, Henry M. Reichenbach of Rochester patented a process for the manufacture of flexible photographic films and continuous lengths, and apparently so far as Reichenbach was aware, he was the first in the United States in this field. He discovered that the addition of a small amount of fusel oil to ether-alcohol and other light-boiling solvent mixtures, would prevent the opalescence and pitting of the films during the dry process, which

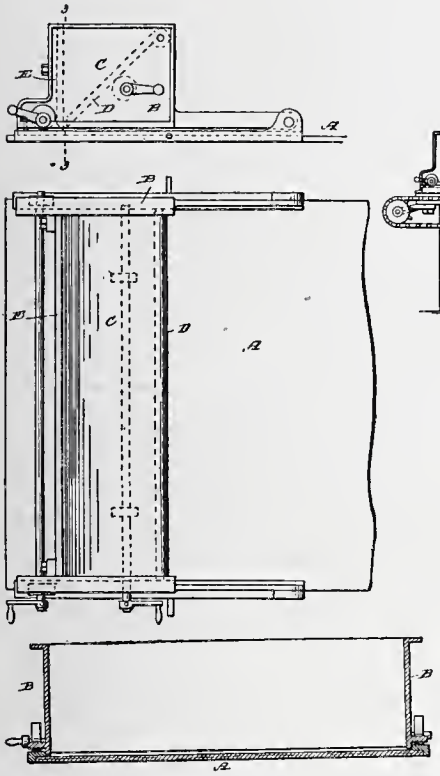

Fig. 261.

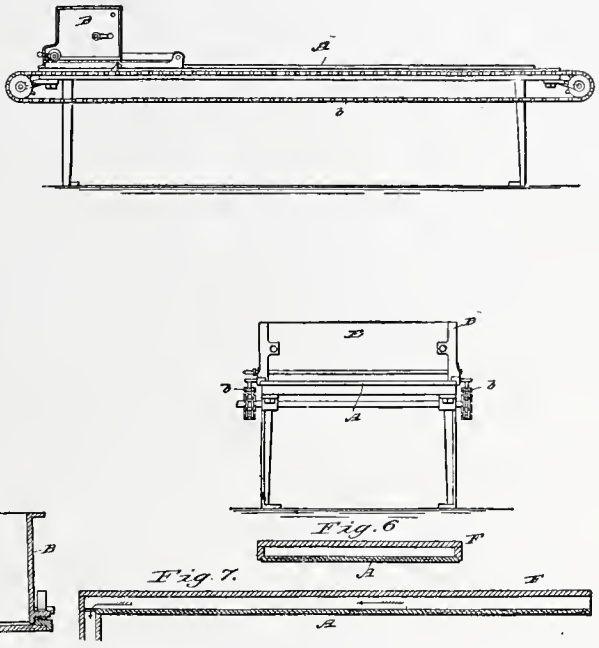

Fig. 262.

The Reichenbach Method of Manufacturing Flexible Photographic Films.

is due to the presence of water, either from an accumulation in the solvents, or precipitation from the atmosphere.[1] The spreading

1. U.S.P. 417202, 1889; the best results were obtained when the film solution was prepared in about the following proportions: 9000 grains nitrocellulose and 5400 grains camphor is dissolved in 112 oz. methyl alcohol, and to the solution is added 28 oz. fusel oil and 7 oz. amyl acetate. He found that if the fluid solution is applied directly to the perfectly clean surface of a glass plate, then dried while still upon such surface, then coated with gelatino-argentic emulsion and again dried, the photographic film will, when dried, be found to adhere so firmly to the rigid supporting-surface that it can be removed only by the application of considerable force, sometimes resulting in the tearing of the photographic film, or stretching it unequally, so that it will buckle and be unfitted for use in roll-holders and for negative-making.

To facilitate the subsequent removal or stripping of the completed photographic film, the surface of the rigid supporting-surface is rubbed with a very weak solution

of the fluid solution is shown in Figs. 261, and 262,[1] embodied a glass or other rigid supporting surface with a traveling carriage carrying a hopper for the fluid solution and a spreader. Reichenbach made

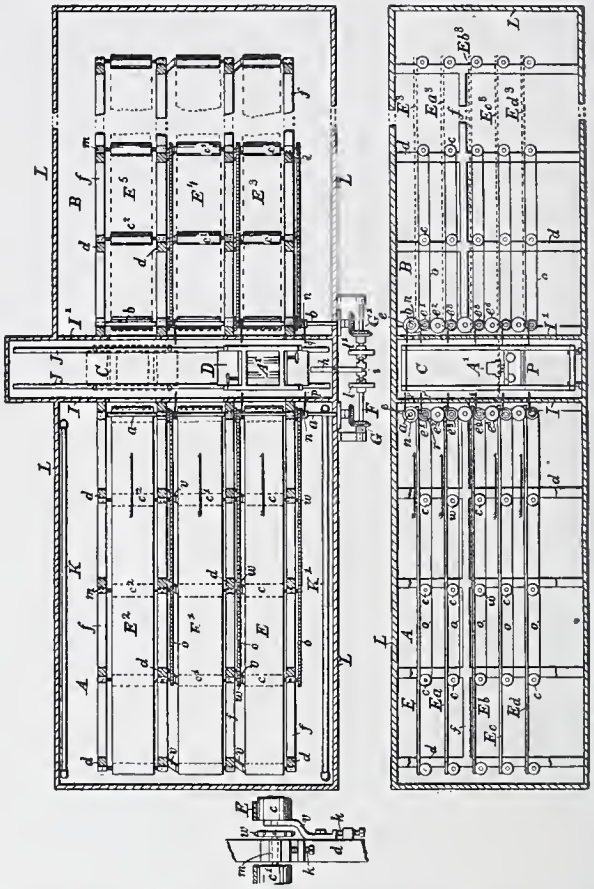

Fig. 263.—The Reichenbach Method of Manufacturing Flexible Photographic Films.

distinct advances in preparing continuous films, as revealed in his U.S.P. 599631, 1898, and 619617, 1899, the latter being specially

of mineral wax in benzine or other suitable solvent, or a weak solution of beeswax, or with any other equivalent agent to produce the same result, before spreading the fluid solution upon the supporting surface. In endeavoring to overcome the tendency to "pitting" or the formation of minute holes in the film during drying, Reichenbach and S. Pasavant (U.S.P. 458663, 1891) have patented the use of the distillate obtained from rectifying fusel oil in the presence of zinc chloride and hence containing amyl chloride. Their preferred formula for films is obtained by dissolving 22 parts by weight of nitrocellulose and 13 parts by weight of camphor in 94 parts by weight of wood alcohol and 34 parts of the distillate obtained as above described. The solution, which is of flowable viscosity, is spread upon the film support as described in U.S.P. 417202.

1. In the drawings, 1 is a side elevation of the spreading device, 2 a plan view of the same, 3 a section on the line 33 of 1, 4 a side elevation showing the means for moving it, 7 a longitudinal vertical section of a casing with conduit leading therefrom, and 6 a transverse section of 7. Reichenbach divides a complete photographic film into the "film support" and the "emulsion" applied to the film

adapted to the coating of paper. In 599631, he reverses the method described in his previous patent, in that instead of maintaining the sheets in a stationary position and causing the hopper to travel over them, the hopper is made rigid, the sheet, in circular form, passing under the spreader, thus preparing films of any length.[1] The aluminum sheets being continuous from end to end obviated the difficulty

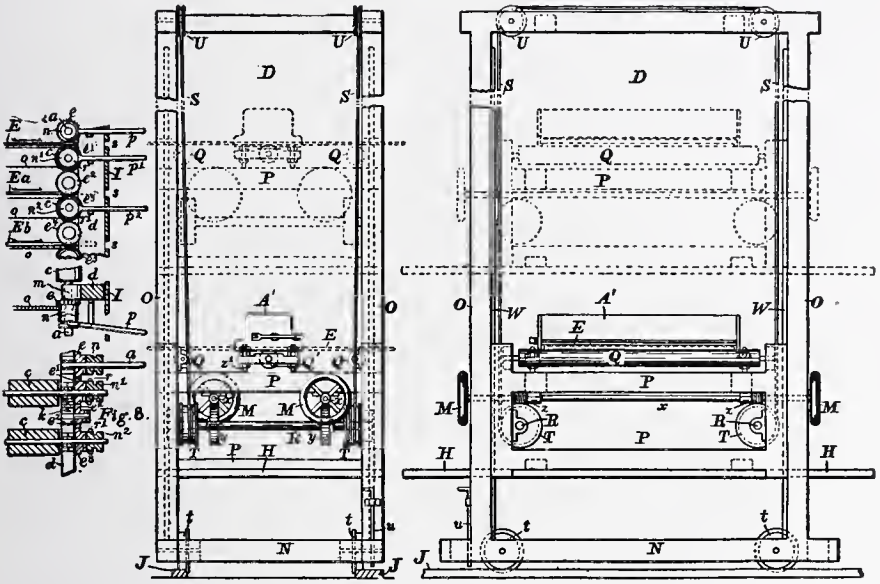

FIG. 264.—The Reichenbach Apparatus for Manufacturing Photographic Films.

formed by the joints at the ends of glass plates. The apparatus is shown in Figs. 263, 264, and 265.[2] In 619617, shown in Fig. 266, a method

support. *A* designates in the drawings a rigid supporting surface (a sheet of plate glass) across and above which is a carriage *B*, mounted upon guides or upon the opposite edges of *A*, and is caused to traverse longitudinally the polished surface by means of the chains or belts *b*. *B* is provided with the hopper *C* carrying the pyroxylin solution, the adjustable gate or valve *D* controlling the volume of solution deposited upon the plate in a given time, by means of the spreader *E*. The subsequent sensitive gelatino-bromide emulsion may be spread on the film surface afterward in the same manner, thus making the photographic film complete.

1. U.S.P. 599631 is also E.P. 4445, 1898. The film was deposited upon aluminum sheets of 200–250 feet in length. In the method of J. Swan and J. Leslie (E.P. 9893, 1890) the nitrocellulose solution is distributed onto paper by means of a machine, the paper having previously been coated with a layer of gelatin or other substance unaffected by nitrocellulose. It is then calendered in order to give a high polish. After coating, the flexible support must be kept level until the solution sets, when it may be hung up to dry. The film is then stripped from the support, the emulsion being placed on the film either before or after stripping. For "Film Drying Machine" see F. Thompson, U.S.P. 939350, 970972, 1910.

2. 1 is a plan view, 2 a side elevation of 1, 3 a detail view representing the bracket for the carrying rolls, 4 a side elevation of the carriage, 5 an end elevation of same, 6 a side elevation of a portion of the gears employed for feeding the sheets, 7 is a plan view of portion of 6, 8 is vertical section of same, 9 is plan view of carriage, 10 is side view of the polishing and preliminary coating device, 11 is partial

of coating paper in continuous lengths is described which substantially is the preferred method of the present time. The usual experience with coating machines demonstrates that it is desirable to subject the coated paper to as little tension as possible until it becomes set, whether the solution deposited is nitrocellulose, which hardens by solvent evaporation, or gelatin, which solidifies upon cooling, for any longitudinal strain has a tendency to form wrinkles or flutes in it. This is especially so where, as in manufacturing photographic papers,

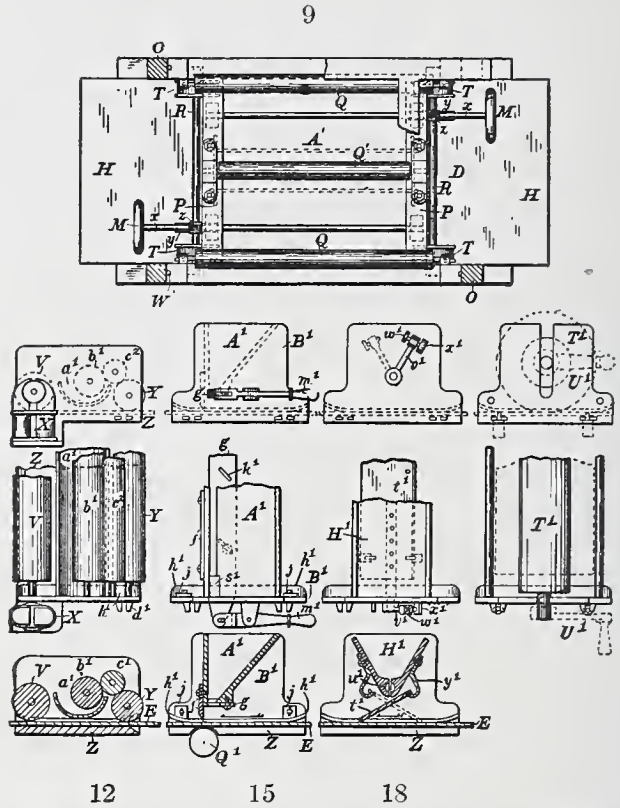

Fig. 265.—The Reichenbach Apparatus for Manufacturing Photographic Films.

it is desired to secure the maximum uniformity of coating. In the operation as usually practiced, the strain of feeding the paper produces wrinkles or flutes which extend in various directions along or across the paper, forming hollows into which the fluid coatings run

plan view of 10, 12 is a transverse section of same, 13 is a side view of the celluloid coating device, 14 is partial plan view of 13, 15 is transverse section of same, 16 is a side view of the emulsion coating device, 17 is a partial plan view of 16, 18 is transverse section of same, 19 is side view of stripper, 20 is partial plan view of same. From the above illustrated mechanism, it follows that the apparatus comprises two chambers arranged to form a central passage between them, suitable sheet-feeding devices arranged one above the other in the chambers, corresponding series of clutches or disconnecting devices, and a suitable vertically-adjustable coating device in the passage.

and produce irregularities in thickness. In order, therefore, to advance the paper while under as little tension as possible, Reichenbach has constructed his machine so that the paper is fed forward by its own gravity while on its way from the coating mechanism to the looping-slat of the hang-up. For this purpose the coating mechanism and carrying holder above it, are located at an elevation relative to the hang-up so that the descending paper from the carrying roller overbalances the paper traveling up from the coating mechanism and draws it along until delivered to the looping-slat, as shown in the drawing mentioned above. The mechanism is arranged to operate with the minimum

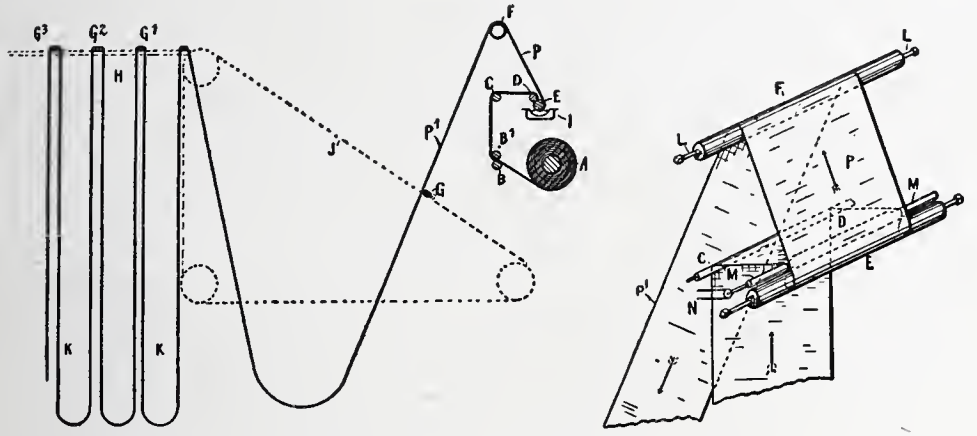

Fig. 266.—Pyroxylin Coating of Paper (Reichenbach).

friction, the paper being unwound from the stock-roll and fed to the coating mechanism by feeding rollers.[1] The stock-roll of uncoated

1. In the drawings 1 is a central longitudinal section, framework omitted, 2 being a partial perspective. The inventor found in practice that a few ounces preponderance in the descending paper will pull the ascending paper along and with such a gentle continuous strain that it remains practically smooth and flat, thus making the coatings more regular and uniform.

The machine patented by G. Pifer (E.P. 28756, 1907) for coating paper with photographic emulsions, is constructed in such a way that the paper itself forms the constantly moving bottom of a trough containing the coating medium. The web of paper passes over a feed-drum, and a delivery drum, so that the loop of paper between the two drums forms a trough. The ends of the trough are closed by rotating discs, against which the edges of the paper are pressed by endless guide-bands. The quantity of coating applied to the paper depends on the fluidity of the composition, and the speed of the paper. The movement of the paper provides a constant agitation of the coating material, and this is kept at a uniform temperature either by means of a hot-water box immersed in the emulsion, or by an external hot-water box on the under side of the paper. If the coating is to be applied in strips, intermediate discs or cylinders are arranged between the two end discs.

A process for glazing paper for use as a temporary support for photographic films during the manufacture of the latter has been patented (F.P. 393627, 1908) by L. Labbe and H. Perret. Strips of paper or linen are treated with a solution containing 5 gm. of celluloid in 100 gm. of acetone; the strips are then dried and coated with a varnish consisting of a mixture of 50 cc. of petroleum spirit and

paper 4, passes through the pulling rollers *BB'*, which unwind it, over the guide roller *C*, and driven feed roller *D*, which delivers it to the coating roller *E*, partially submerged in the nitrocellulose solution placed in *I*. After coating the paper passes over the upper idle, non-driven carrying-roller *F*, and thence to the looping chain device shown in the drawing.

An important apparatus for producing pyroxylin sheets in continuous form is that devised by J. H. Stevens and M. C. Lefferts[1]

50 gm. of a paste prepared by grinding together white copal and boiled linseed oil. When the varnish has dried, a coating of gelatin is applied; this is prepared by dissolving 10 gm. of gelatin in 100 cc. of hot water, adding 4 cc. of glycerol, and then, immediately before use, 0.5 gm. of either formaldehyde, potassium bichromate, or aluminum acetate. Finally, a coating of a solution of 10 gm. wax in 100 cc. of alcohol is applied.

1. U.S.P. 573928, 1896. With unimportant refinements, this method is used at the present time to produce large quantities of nitrocellulose and cellulose acetate films in the United States. The diameter of the large wheel is about 12 ft., the width of its periphery about 36 in. These drums are constructed with steam connection like a hollow calender roll. First a heavy iron cylinder is taken and machined as round and smooth as possible. This is then electrolytically copper plated on the exterior surface. The surface is again machined to make it true, after which it is nickel- or German silver-plated of the maximum thickness (about 0.004 in.). Finally it is polished as smooth as possible. In the preparation of modern continuous photographic films, the points taken into consideration are as follows: (1) The cellulose nitrate or acetate should be carefully paper filtered, preferably through filter presses, in order to remove all traces of insoluble matter, which would appear conspicuous upon magnifying the film when thrown on the screen. It is customary to make up the solution and allow it to settle for from one to three weeks before filtration, in order for the finer particles to coalesce and thus render clarification by filtration more nearly absolute. The clarification devices mentioned in Chapter IX are applicable in this instance. After filtration, the solution should be left undisturbed for another week in order to eliminate air bubbles by gravity. This is an important step in guarding against the appearance of pin holes not due to rapid evaporation of solvent. (2) The solvents and non-solvent liquids in the pyroxylin formula should be so adjusted that at all periods of the evaporative process there is the proper preponderance of high-boiling cellulose nitrate solvents, to guard against the partial precipitation of the pyroxylin from an accumulation of moisture, and to sustain the proper equilibria between water, non-solvent and solvent, so that the temperature of evaporation and the speed of volatilization will be such as to produce a smooth integument, free from blurs, pin holes, excrescences or bubbles. (3) The viscosity of the pyroxylin solution should be so adjusted that taking into consideration the diameter and speed of revolution of the coating wheel, the collodion, while still sufficiently flowable, shall set or jellify before it runs or distorts from the force of gravity. Variations from this normal viscosity can be partially adjusted by the speed of the coating wheel, but not from adjusting the width of the aperture through which the collodion flows onto the wheel. Any disturbance of the latter changes the weight of pyroxylin deposited on a unit area of the wheel, and hence the thickness of the finished film. (4) The width of the aperture admitting the collodion to the wheel may be so adjusted as to produce a pellicle of any desired diameter, from one almost intangible to several hundredths of an inch in thickness. The aperture is usually regulated by a fine wheel, which may have a micrometer gauge attached, when with a given speed of coating wheel, the diameter of the finished film may be determined in advance. (5) The hardness of the film at the time when stripped off from the wheel, is modified by the speed of revolution of the latter, and the temperature of the interior steam chest. By intelligent manipulation of the above five-named factors, modern continuous nitrate and acetate films are produced. Where cellulose acetate films with acetylene tetrachloride

and patented in 1896. They realized the fact that the great advantage of using glass plates for the preparation of photographic films, was the fact that the smoothness of the glass coupled with the fact that it was unacted upon by acidity in the pyroxylin, caused the film to be as smooth when peeled from it, as the surface of the glass to which it adhered. By special methods of neutralization and the use of antacids as described in Chapter XIV, entirely neutral films were possible. They substituted for the surface of the glass a smooth metallic surface and as an additional novelty, the surface of metal was in the form of an endless band or belt, upon which the pyroxylin solution is spread

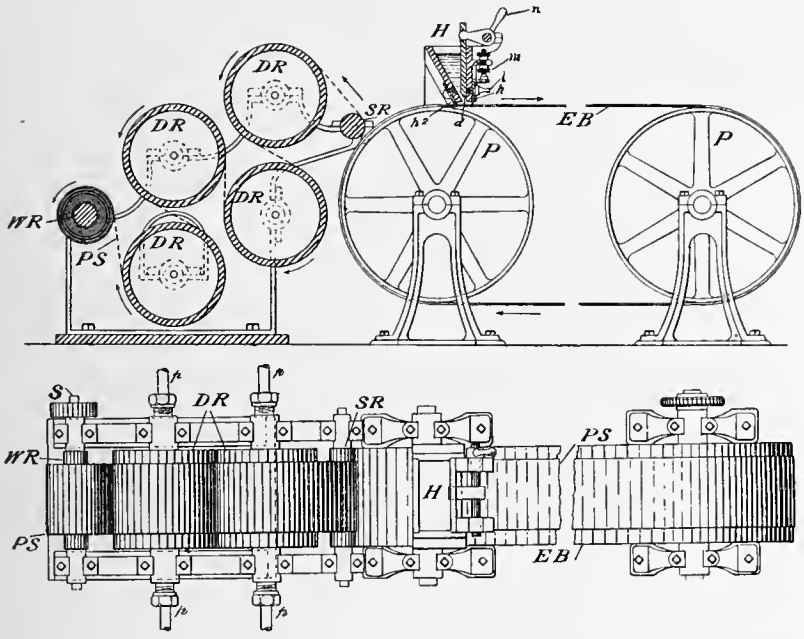

Fig. 267.—The Stevens & Lefferts Apparatus for Producing Pyroxylin Sheets.

and dried while the belt is in motion, and then stripped from the belt before it has made a complete revolution, thus furnishing a means of producing continuous sheets of great regularity and rapidity, and of practically unlimited length. They also attempted the recovery of the evaporated solvents with a commercial degree of success. The apparatus employed in carrying out the process is shown in Figs. 267 and 268.[1] The endless belt *EB* or the wheel *A* is set in motion

is used as the solvent and plastic, the revolutions of the coating wheel and temperature of same are so adjusted that a predetermined amount of tetrachloride is left in the film, to the presenee of which the latter owes its flexibility and plasticity. The eellit films (Chapter XIX) are treated in an analogous manner to celluloid films already deseribed.

1. 1 is a longitudinal seetional view of the apparatus, 2 a plan view of the same, 3 shows a modification, and 4, 5, 6 show enlarged detail views of the hopper *H*. The endless belt *EB* is made preferably of German silver or niekel-plated cop-

in the direction indicated by the arrows in the drawings, and the hopper *H* kept filled with the pyroxylin solution, the diameter of the slit at the bottom of the hopper, being regulated so as to produce a film

per, placed around the pulleys *PP*, from which it receives its motion. The belt is supported and prevented from sagging by the use of idlers. In 3 a modification of the apparatus, *s* is shown by passing the endless belt around a large pulley or wheel *A*, or using the surface of such wheel itself. *H* is a hopper containing the

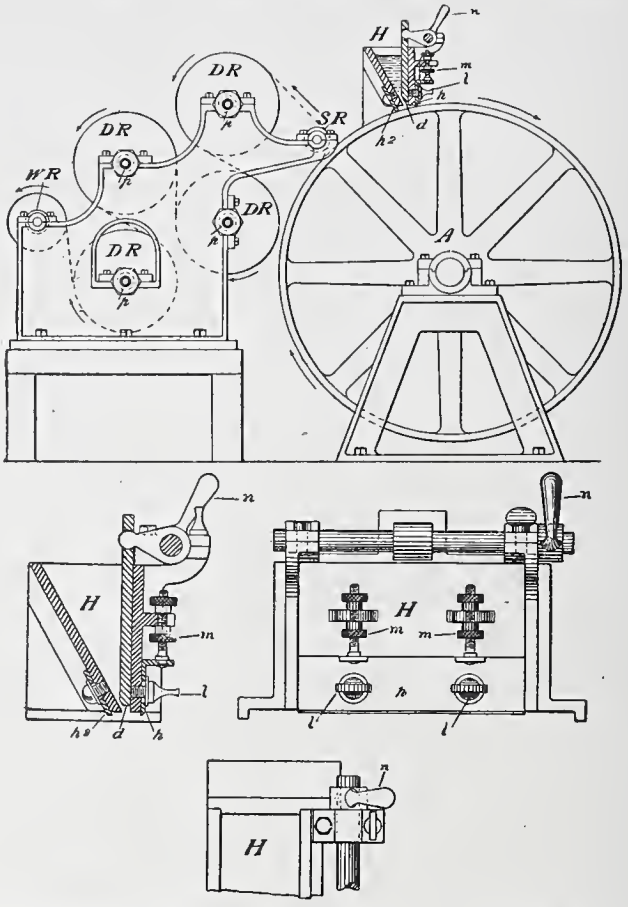

Fig. 268.—The Stevens & Lefferts Apparatus for Producing Pyroxylin Sheets.

pyroxylin solution, and open at its bottom at a point directly over the belt or wheel, the size of the opening being varied as desired by raising or lowering a plate *d* within the hopper by means of the handle *n*. The thickness of the strip of the solution which is flowed upon the wheel or belt is varied by means of a scraper *h*, which is moved to and from the belt by finger-screws *m* and clamped in position by thumb-screws *l*. Scraper h^2 is composed of rigid material softer than the surface of the belt or wheel to avoid abrasion, and is in contact with the belt or wheel, so as to prevent the spread of solution in that direction. 4, 5, and 6 show enlarged views of hopper *H*, with the plate *d* and scrapers *h* and h^2. *SR* is a stripping-roll for stripping the pyroxylin sheet from the belt or wheel, whence it passes over the drying-rolls *D R*.

DR is a series of rolls of smooth or polished metal, capable of being heated or cooled by steam or water-pipe attachments, *p* 2 and 3. These rolls can be replaced by any curved surfaces, such as half-rolls, or cloth- or paper-covered rolls can be

of any given diameter. The thickness of the film formed is governed by (*a*) total solids and viscosity of pyroxylin solution; (*b*) diameter of slit in *H*; and (*c*) speed of revolution of the wheels *P* governing the speeds of the belt being coated. The belt is preferably of such length and travels only with such speed as to permit the solution to part with sufficient of the solvent to become set or too stiff to flow before it has left the horizontal position and begun to pass over the first pulley to which it comes. The employment of the wheel is limited to those cases where the solvents are sufficiently volatile to permit the spreading surface to set quickly, so that the absence of horizontal positions

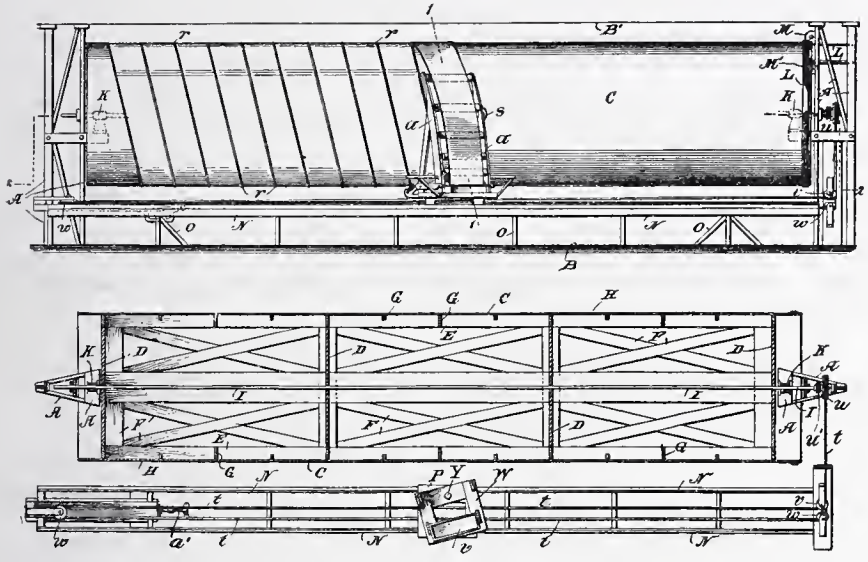

Fig. 269.—Process of Making Nitrocellulose Sheets (F. A. Anthony).

will not cause irregularities in the dried sheet by the flow of the pyroxylin solution.[1]

used and furnish excellent means for drying. Provided the half-rolls do not offer too much friction for the passage of the film they will do fair work, but the revolvings rolls or wheels are preferred.

WR is a winding-roll upon which the sheet of dry pyroxylin compound can be wound. This winding-roll may consist of a simple spool of wood or other suitable material arranged so that it can be detached from the shaft *S*, carrying with it the pyroxylin sheet *PS* wound upon it, thus furnishing a convenient core. See Henry Parkes, E.P. 1866, 1879.

1. The speed of the belt or wheel, and also the flow from the hopper, should be so regulated that the sheet will have become sufficiently dry to be stripped and passed over the drying-rolls before it has made a complete revolution with the belt or wheel and before the portion of the belt to which it adheres reaches the hopper.

The stripping-roll *SR* ought to be of small diameter, preferably about eight inches, of straight face and smooth surface, and to be parallel with the face of the belt or wheel. This stripping-roll performs the important function of pulling the film from the wheel with an even tension, and is preferably placed very close to it, so that the film will be stripped immediately after passing under the stripping roll, and on a line with the centers of the roll and the nearest pulley or the wheel.

In the later process of F. A. Anthony[1] and shown in Figs. 269 and 270, the nitrocellulose ("paroxylin," "nitrated tissue," "cellulotrinitrin") having been dissolved and reduced to the desired state of limpidity, is placed within the coating trough v of the machine and the upper frame of the traveling carriage is swiveled to such angle

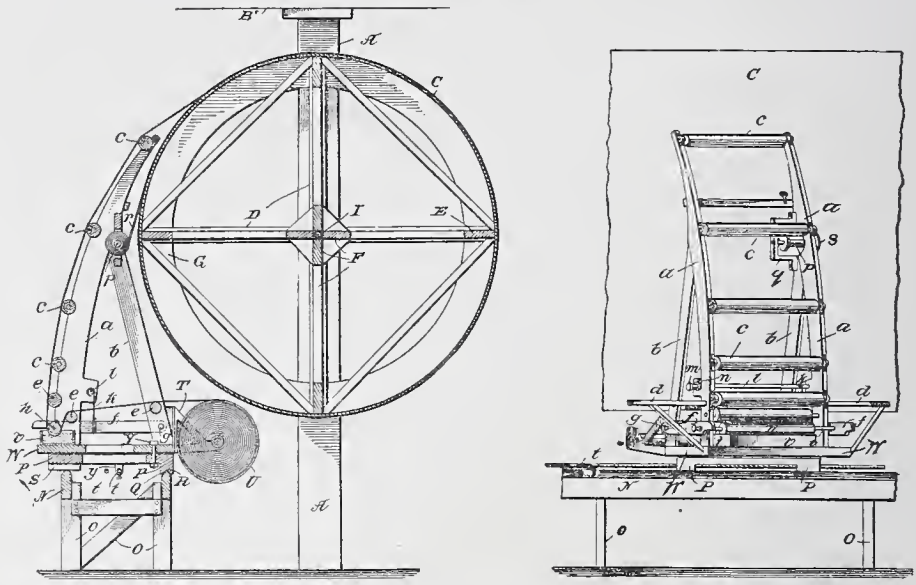

FIG. 270.—Process of Making Nitrocellulose Sheets (F. A. Anthony).

relative to the plane of the surface of the drum as is requisite to wind the successive convolutions of the fabric smoothly and spirally upon

This prevents stretching or distorting the film by reason of its tendency to leave the wheel or belt irregularly and not on a line parallel with its face. This stripping-roll is preferably arranged so as to revolve with the stripped film, in order to keep the sheet straight, but it would perform the same function if fixed, but with more friction and danger of stretching the film. In the latter case any curved surface would answer in place of the roll.

By heating the drying-rolls *DR* in such a manner that the freshly stripped sheet is brought successively in contact with rolls of constantly increasing temperature the residues of volatile solvent are driven off very rapidly, and economy in time is effected, and the capacity of the driving-belt or wheel also greatly increased, for it has been found that by maintaining a tension upon the sheets, while they are in contact with heated rolls the evaporation of the solvent from the compound on the wheel need only to be carried to a point where the solution will have become set in the condition of a moderately soft sheet, which can then be stripped and passed over the drying-rolls. In all cases it is preferable to attach a sufficient length of cloth to the ends of the sheet, so that it can be held taut and led around or held back while passing around the rolls or while being wound upon the spool or winding-roll *WR*. The last one or more drying-rolls over which the sheet passes are preferably of a lower temperature than the others, in order to chill the sheet before it is reeled upon the winding-roll *WR*.

In using cloth-covered rolls the drying may be done in the air at ordinary temperatures or in specially dry or slightly heated air.

1. U.S.P. 726614, 1903. In the drawings, 1 illustrates a side elevetion of the mechanism, 2 a horizontal sectional view of 1, taken on the lines 2, 2; 3 a tranverse sectional view of the same, and 4 a perspective view of the coating mechanism and adjacent guiding frame which coacts with it.

the drum so that they will not overlap, but will lie properly adjacent to one another. The roll of the web or fabric of such size—i.e., width and length—as desired is then supported upon the axis of the brackets *T'* of the carriage. The web may be of paper, cloth, or composition fabric, or it may be a coil of thin metal. The arms *ff*, which carry the coating-roller *h*, are then by the proper manipulation of the little shaft *l* lifted, so that the coating-roller does not touch the surface of the solution in the trough *v*. The end of the web is drawn off from the coil *U* and passed over the guide-rollers *ee*, thence under the guide-rollers *cc*, and attached in any suitable manner to the drum, preferably near its left-hand end, all as shown in 1. By the turning of the little shaft *l*, so as to permit the descent of the arms *ff*, the coating-roller is lowered until its under arc engages with the solution in the trough *v*. The cord *r* is also drawn off from the spool *p* and its end attached to the surface of the drum close against the forward edge of the web or strip of fabric. The drum is slowly rotated by the movement of the power-conveying belt *L*. The revolution of the drum pulls off the web from the roll *U*, thence over the guide-rolls *ee*, under the coating-roll *h*, where it is coated with the solution in the trough, thence up over the guide-rolls *cc*, and, finally, it is wound upon the surface of the drum in a spiral manner, as shown in 1, the cord *r* being simultaneously wound spirally around the drum between the adjacent edges of the several convolutions of the web.[1]

1. In order that the sheet or film of nitrocellulose may be stripped from the fabric upon which it was made, the end of the web should be conducted from the machine to a device for stripping the film so that the operation will be, in effect, a continuous one, and the product with the nitrocellulose film or sheet separated from the web effectively preserved, so that it will not be liable to injury. The end of the cord *r* should be disconnected from the spool *p*, which supports it during the secondary operation of the machine, after the drying of the film, and after the removal of the coated web from the drum. The cord may be again wound upon the spool after the second operation by the use of the hand-wheel *s*.

The surface of the web may be treated with starch, paraffin, wax, or other materials used for the purpose of regulating the adhesion between the nitrocellulose solution and the web.

After the film of nitrocellulose has been stripped from the web it may be passed through the machine for the purpose of having a photographically-sensitive coating applied to its surface.

The following features pertain to this process: When the dissolved nitrocellulose is spread upon the web and commences to dry, it has a decided tendency to contract laterally, thus tending to curl up the edges. The presence of the series of guide rollers *cc* on the traveling rack and their disposition in such manner that the web makes an angle or bend at each one of them, as illustrated in 1, and particularly at the upper ones, by which time the drying operation has advanced, tends to hold the web down flat and properly guide it upon the drum, upon which the strain due to friction causes it to be drawn snugly in place. By the employment of the cord *r* between the adjacent edges of the convolutions of the web when upon the drum, uniformity in the thickness of the coating is secured, which cannot run off sidewise, thus tending to thin the coating at the edges, because the cord acts as a dam, preventing such lateral flowing. This cord also prevents the smearing of the face of the drum and the sticking together of the adjacent edges of the

web, which might result in rupture of the coating during the act of removing the coated fabric from the drum.

The process of R. A. (not F. A.) Anthony (U.S.P. 735436, 1903) consists in applying a flexible photographic film embodying a sensitive layer applied to one side of a nitrocellulose support and a protective layer of colored, insoluble gelatin or similar opaque material, detachably attached to the opposite side of the mount. In the patented process of T. H. Blair (E.P. 5504, 1893; abst. J.S.C.I., 1894, **13**, 659; 1895, **14**, 298) a slowly revolving drum with a slightly roughened surface is used to receive the substance forming the substratum of the film. This substance is applied by means of a hopper with a narrow opening of about the ultimate breadth of the film. From the drum the material is carried over bands, rollers, etc., until sufficiently dry. After that it enters a dark chamber, where it is dipped in the sensitive emulsion, then cooled by a blast of cold air, and finally wound on a reeling apparatus consisting of a shaft provided with an apron, upon which slats or bars with projecting portions at the ends are fixed in such a way as to prevent the second layer of film and apron from touching the former, and

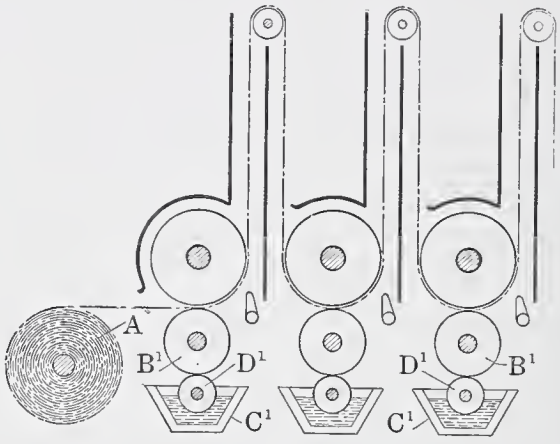

Fig. 271.—The Thornton Film Coating Apparatus in which the sensitive emulsion is deposited in a plurality of thin coats, so as to obtain more uniform deposition. To obviate wrinkling and curling the back of the film has a thin layer of gelatin attached. In order that a subsequent coat may not cut into the next previous one, the film is subjected to a blast of hot air after depositing each emulsion layer.

allow sufficient air space. The film is thus held under suitable tension until it is dry and ready for use.

In the method of J. Acworth (E.P. 3836, 1890; abst. J.S.C.I., 1891, **10**, 793) a band of American cloth or other suitable material is coated with a strong solution of gelatin or isinglass, containing glycerol or some similar compound to make it pliable. When the film of gelatin is dry it is stripped off the support and wound on a roller. The film is then passed through a solution of pyroxylin, which makes it waterproof or nearly so on both sides. The pyroxylin solution contains from 3–6% pyroxylin dissolved in a mixture of amyl alcohol and amyl acetate. The film is afterward dried up by passing dry air over the surface, or by placing it in a room kept at a suitable temperature, or by passing it through a specially constructed chamber containing air heated to about 200° F.

The process of J. E. Thornton (E.P. 5793, 1899; abst. J.S.C.I., 1900, **19**, 559; also Thornton and Rothwell, abst. J.S.C.I., 1900, **19**, 71, 274, 157, 689; 1901, **20**, 68; 1904, **23**, 680) relates to a method of coating plates and films with sensitive emulsion, in which the emulsion is applied in a succession of thin layers, each of which is rapidly dried by a blast of hot air. In the apparatus shown in Fig. 271,

The F. M. Cossitt method of coating nitrocellulose films [1] and shown the paper or other support is drawn from a reel A over a coating-roller B^1, and then up a funnel through which a blast of hot air is passed. The paper then passes down to another coating-roller, and so on. The coating-rollers B^1 are supplied by doctor rollers D^1 which dip in the troughs C^1 containing the liquid emulsion. For coating glass plates, an endless band is used to carry the plates. The emulsion is applied in a thin layer by an air blast. In the machine for forming nitrocellulose patented by F. Bayer & Co. (E.P. 17009, 1909), a band of metal or other suitable material, somewhat broader than the film to be made, is formed into a circular ring, and guards are fixed at either edge of this ring, preferably made of bar-metal of I-section. These guards rest on two bearing rollers, one of which can be rotated. A feeding device is fixed inside the ring, at its lowest part, and a stripping roller and reel are provided to remove the film when a nearly complete revolution of the ring has been made. The upper part of the apparatus is inclosed in a suitable casing, provided with a heating coil or other drying device. The solution of celluloid is fed onto the inner surface of the ring, which is rotated at such a speed that the film is dry when it reaches the stripping roller.

1. U.S.P. 864123, 1907. In the drawings, 1 illustrates a side elevation of one form, and 2, same as 1 except that the nitrocellulose film is made upon a large revolving drum. In 1, A is the frame, B a movable and preferably flexible apron of suitable material, supported upon a roller C, thence over a guide roller D, thence over another E, and under a hopper F, which contains the pyroxylin solution. G is a table beneath the apron, which supports it opposite the opening in the hopper F so that the apron may receive the nitrocellulose solution H smoothly, evenly and of uniform thickness. The apron and solution deposited thereon travel together in the direction shown by the arrow. The apron passes around the roller I, by which time the pyroxylin has attained such a degree of cohesion that it may be stripped from the apron, but is still "green" (somewhat soft and tacky). At the roller I where the stripping is effected, the apron B passes upwardly in the direction of the arrow around another roller K upon which it is wound up. Meantime the stripped nitrocellulose film passes around the drum L, over the small guide roller M, and thence downwardly into the tank N, containing gelatin or sensitizing solution, O being a submerging roller beneath which the pyroxylin film is conducted, so that while passing downwardly and also upwardly through the solution, both sides of the film are coated. After passing through a series of deflecting bars PP, of glass to remove excess of gelatinous or other solution, the coated film passes around the guide roller Q and over and under a series of rotating drums RR, and finally at the end of the machine it passes around measuring rollers SS', and finally wound upon the roller T as a completed article ready for storage or use. It is desirable that both surfaces of the nitrocellulose film shall have substantially the same degree of dryness before its submergence in the gelatinous coating. Therefore, since the under side of the film which was next to the apron before stripping has not been subjected to the drying influence of the air as the exposed surface has been, it is passed around the drum L before it reaches the submerging tank N, and during its passage around this drum, is subjected to a current of air heated to about 65°, the temperature being regulated so that the outer side of the film shall attain substantially the same degree of dryness and hardness as the other or heretofore exposed surface. The usual precautions in regard to the presence of dust and excessive humidity should be carried out in this as well as all other film-forming operations.

The patent of B. J. Edwards (E.P. 19437, 1902) relates to apparatus for the manufacture of long lengths of celluloid film to be coated with emulsion, or for coating long lengths of celluloid paper, etc., with gelatin emulsion. The film to be coated is fed from a supply spool to a roller, from which it passes over a series of parallel transverse rollers mounted in adjustable bearings in a curved frame. An endless metallic or other supporting band passes over the rollers, and is pressed into contact with the film by a roller. The emulsion is fed onto the film from the reservoir, and is cooled by iced water, etc., cisterns. Cold water also being allowed to pass over the surface; some of the rollers may also run in iced water. The film is received on a take-up drum provided on each side with slotted radial guides, in which the enlarged ends of rollers can engage. The

in Fig. 272, is designed primarily to coat a large number of lineal feet in a given time.

In a more recent French process [1] a very thick collodion, prepared

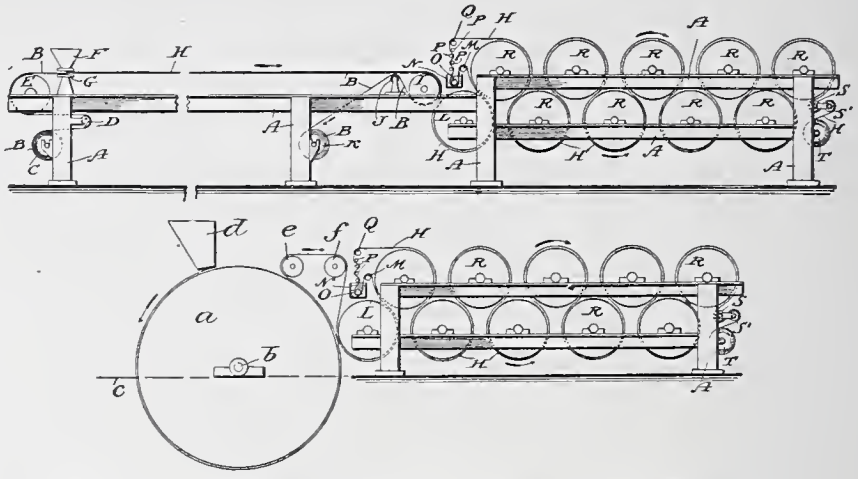

FIG. 272.—Coating Nitrocellulose Films (Cossitt's Method).

rollers are placed on an inclined table having a terminating lip, the guides being arranged to take one roller at a time from the table so as to separate the coils of the film. The parts are driven by belting, a tension roller being applied to the belt of the take-up drum. When making the celluloid film, the celluloid solution is supplied from the reservoir onto the endless band, the cisterns being heated to drive off the solvent. When celluloid, etc., is being coated, the endless band may be omitted.

1. Soc. Civile des Pellicules Nouvelles pour Cinématographes et autres usages, F.P. 384111, 1907; First, Second and Third Additions thereto dated Jan. 28 and Feb. 1, 1907; Fourth Addition thereto dated Aug. 31, 1907; F.P. 384112, 1907; First Addition thereto dated July 6, 1907; abst. J.S.C.I., 1908, **27**, 471, 1081, 1220. (1) In the original specification, F P. 384111, provision was made for glazing the films of cellulose by means of a calender with heated rolls. According to this addition, such glazing may be effected by placing the films in alternate layers between polished metal plates, and pressing a number of such films and plates in a powerful press at a temperature of about 100°. (2) The head of the apparatus, containing the orifice for delivery a continuous film of a solution of cellulose, consists of two portions with accurately planed surfaces. The lower portion is attached to the vessel containing the cellulose solution, and the delivery orifice may be made by interposing strips of metal of suitable thickness around three sides of the joint between the two portions of the head, which are then clamped together. Or else the orifice may be made by cutting smooth rectangular grooves in one or other of the surfaces of the head-pieces. (3) The continuous films of cellulose made by the process specified, may be coated superficially with pyroxylin or celluloid by passing them through a bath containing a solution of pyroxylin, which may be either plain or mixed with a substance, such as camphor, castor-oil, acetanilide, etc. A cellulose film so coated is capable of receiving impressions with inks designed for celluloid films and made with a medium which has no affinity for that substance. The Etablissement Gaumont (F.P. 391897, 1907) preserve cinematographic films, by applying to the image side of the film a solution of 33 parts of 9% nitrocellulose in amyl acetate, diluted with alcohol 67 and drying oil 5 (all gm.).

In Fourth Addition to 384111, the proneness of films to "cockle" during drying is prevented by clamping the edges of the moist sheet on a frame or table. A method of joining films together by stitching is described, the stitches being cemented by a suitable varnish. In 384112, a thick solution of celluloid,

by increasing the usual ratio of alcohol to ether by about 15%, is caused to flow very slowly, under a pressure of 3–10 atmospheres, from a rectangular orifice, which may be from several centimeters up to 1 meter in length and up to 0.8 mm. in width. The sheet of fluid collodion thus discharged does not coagulate immediately, and the rate of flow must be such that is it exposed to the air without any support for one to two minutes before it is caught and carried away as a continuous ribbon by a slowly moving endless band of cloth This band carries the film through a chamber in which it is dried by a current of heated air. The film is denitrated by any of the known processes, and is then bleached and partially dried to such a point that it does not curl up. Finally the moist film is fully dried and polished under pressure by means of a calender with heated rolls.

In the G. E. Hüe process [1] pure nitrocellulose 8 k. is dissolved in acetone 30 k., amyl acetate 20 k., and methyl alcohol 40 k. are then added successively, the solution being well stirred to keep it homogeneous. A small quantity of sodium ricinoleate, e.g., 1 k., is then added to give the film the necessary flexibility, and a little ultramarine or similar substance, to correct the yellow tint. The solution is dried off as usual, after pouring on plates, and after washing with dilute ammonia is coated with the emulsion.

M. Ratignier and H. Pervilhac & Co.,[2] claim that any of the solutions employed in the manufacture of artificial silk may be used for making films by this process, which is characterized by the fact that

containing about 100 k. of pyroxylin in 400 l. of alcohol and ether, together with sufficient camphor or other agent to impart the desired flexibility, is discharged from an orifice in the form of a continuous film in the manner described in the preceding abstract. The film, after drying in hot air, is subjected to a calendering and drawing-out process. For this purpose it is passed through a calender with polished metal rolls, which not only flattens and smooths the surface but also rolls out the celluloid film so that the resulting increase in length may amount to as much as 20%. G. C. de Brialles (F.P. 386845, 1907; and First Addition thereto dated Mar. 30, 1908; abst. J.S.C.I., 1908, **27**, 834) has devised a non-inflammable cinematographic film in which gelatin—preferably chondrin—is bleached with dry chlorine, the residual hydrochloric acid being removed by means of ammonia. The gelatin is then liquefied, filtered under pressure, formed into ribbons, and rendered impervious to moisture by placing it between two helical electrodes in a bath of alcohol, water, and tannic acid or analogous substances, at a low temperature. It is then dried *in vacuo* to prevent deposition of dust and moisture, and steeped in a solution of collodion in acetone oil and vaseline oil, after which it is again dried *in vacuo*, the acetone being recovered. The steeping operation may be repeated as often as thought desirable. The bands of gelatin may be joined end to end by a solution of gelatin in hydrochloric acid, but this should be done before the deposition of the collodion layers.

1. F.P. 387791, 1907, abst. J.S.C.I., 1908, **27**, 877.

2. F.P. 391785, 395665, 1908; abst. J.S.C.I., 1908, **27**, 73,444*r*. See also W. H. Walker, E.P. 4214, 1893; Sandell Films and Plates, Ltd., and W. H. Smalley, E.P. 25243, 1902; and O. Moh, D.R.P. 204868, 1906; U.S.P. 953175, 1910, for other methods of continuous pyroxylin film formation.

the film is kept in a stretched condition throughout its manufacture, thus avoiding shrinkage and yielding a product having a very smooth surface and a high degree of transparency. From a reservoir, in which the level of the liquid is maintained constant, the solution flows out onto the surface of a slowly revolving drum. The flow and the width of the film are regulated by means of an adjustable slide in the wall of the reservoir, which is set to leave a space of a desired dimension between its lower edge and the surface of the drum. The lower part of the drum is surrounded by a mantle in which the coagulating liquid is circulated. The film after passing through this liquid is detached from the drum and, its edges engaging with two parallel endless bands which serve to keep it in position, is led around a number of perforated drums upon which the operations necessary to ensure complete coagulation, washing, etc., are carried out, after which the film is dried upon a cylinder.

According to the continuous production of films by coagulation, of the Soc. Gen. des Films and C. Gonon [1] a collodion of 20–25% concentration, prepared by dissolving a very soluble, hot-nitrated pyroxylin in methyl alcohol containing 15–18% of ether, is delivered through a slit onto an endless band traveling beneath the surface of a coagulating liquid. This liquid must be miscible with methyl alcohol, but must not dissolve the pyroxylin; for instance, 80% alcohol, or benzene, or petroleum hydrocarbons, may be used. The film is carried on the endless band through the coagulating bath and is then still sufficiently plastic to be smoothed or further flattened by pressure between rollers; it is finally dried in a current of air.

The support of the cinematograph film may be emulsified only on the central or working portion, leaving the borders uncoated, which may be perforated or otherwise treated before or after emulsifying. An apparatus is described for coating a film in the above manner.[2]

In another process [3] a number of plates with plane surfaces, mounted

1. F.P. 388755, 1908; abst. J.S.C.I., 1908, **27**, 959. See J. Chaubet, E.P. 14525, 1899, for manufacture of photographic films from cellulose in ammoniacal copper oxide. H. Danzer (E.P. 3603, 1910), waterproofs cellulose cinematograph films by superficially nitrating or acetylating them.

2. Process of Comp. Générale de Phonographes, Cinématographes et Appareils de Précision, F.P. 410986, 1909; E.P. 14039, 1909. J. R. France (U.S.P. 498257, 1893) has patented a complicated mechanical arrangement for cutting films from a pyroxylin plastic block in continuous lengths, in a manner similar to the manufacture of veneer from logs, the plastic block being rotated against a rigid knife-edge. A. Lumière & Sons (F.P. 400739, 1908; abst. J.S.C.I., 1908, **27**, 83r) describe a method for treating cinematograph films which have become dull or scratched, by repolishing them after a coat of collodion or celluloid has been applied to one to both sides of the film. For utilization of waste from collodion films see A. Lumière & Sons, F.P. 350187, 1904; abst. J.S.C.I., 1904, **23**, 1256; also E.P. 16114, 1908, for their non-inflammable collodio-gelatin film.

3. Soc. Civile des Pellicules Nouvelles pour Cinématographes et autres usages,

on wheels, are joined together to form an endless band, which passes over a vacuum chamber containing water-cooled tubes: each plate is perforated with a number of holes. A band of celluloid is led onto the chain of plates, and is given a velocity equal to that of the plates; just after it passes over the vacuum chamber, where it is held in close contact with the plates, a stream of emulsion is made to flow onto it; it then passes beneath hoods containing cold water, and finally to the drying apparatus.

Drying Continuous Films. It is usually commercially more profitable in continuous film manufacture to solidify the fluid stream into a sufficiently solid mass to admit of working with, and then to transfer this endless band to another series of dryers connected with the film-forming machine where the final solvent is expelled. J. Hyatt embodied the modern ideas in his U.S.P. 254439, 1882, in which is described and illustrated a method of drying pyroxylin plastic sheets, by moving them along surfaces of artificially heated drums, with sufficient tension so that the sheet would dry completely before the tension is discontinued, and hence obviate tendency to buckle and wrinkle. The recent process of drying films as worked out by F. B. Thompson [1] illustrates the actual methods of drying large quantities of films continuously at the present time. The mechanism is shown in Figs. 273, 274 and 275 details being given in the note below.[2] The machine is to be used in conjunction with one of the film-

F.P. 393224, 1907. For process for reutilizing the band supports of cinematograph films, see E.P. 14039, 14407, 14950, 1909.

1. U.S.P. 939350, 1909; 970972, 1910. W. A. Daniels (E.P. 24556, 1909) describes machines for coating with pyroxylin the gelatin surface of perforated cinematograph and like films, which are provided with means for projecting an air blast on the side of the web opposite to that which receives the coating, the object being to prevent the pyroxylin from flowing through the apertures in the web and thus closing them.

2. In the drawings 1 is a detail vertical longitudinal section of the machine on the line 1–1 of 2, some of the parts being broken away; 2 is a detail plan on a comparatively small scale; 3 is a detail plan of the machine on a larger scale, some of the parts being broken away and others being omitted for the sake of clearness; 4 is a detail sectional view on the line 4–4 of 3; and 5 and 6 are transverse vertical sections on the line 5–5 and 6–6 respectively of 3.

The machine is provided with a frame, consisting of corner uprights, as 10, 11, side sills 12, 13, and top rails 14, 15. The two sides of the frame are united by cross rods, as 16, 17. Mounted upon this frame are two sets of rollers, one designated by the numerals 18, 19, and 20, being arranged along the top of the frame and journaled in its side upright bars 14 and 15. The other set, designated by the numerals 21, 22, and 23, is journaled in the uprights and sills, 12, 13. The members of the two sets of rollers are preferably in vertical alignment. A sprocket wheel 24 is mounted on the end of one of the rollers, as shown the end roller 18 of the upper set, for the purpose of receiving power for operating the machine. In order to drive all of the rollers, those of one set, as shown the upper set, are connected together by a sprocket chain 25 engaging sprocket teeth 26 formed on the several rollers of this set. An endless band 27 runs upon all of the rollers of the two sets and is given many turns about each pair of rollers, one member of each pair being in each of the two sets.

forming machines just described, the film (represented by the dotted line 37) being delivered to the tape 27, adjacent to the tightening roller 28. The end of the film may be secured to the tape by means of a pin, cement or otherwise. The machine being set in motion the

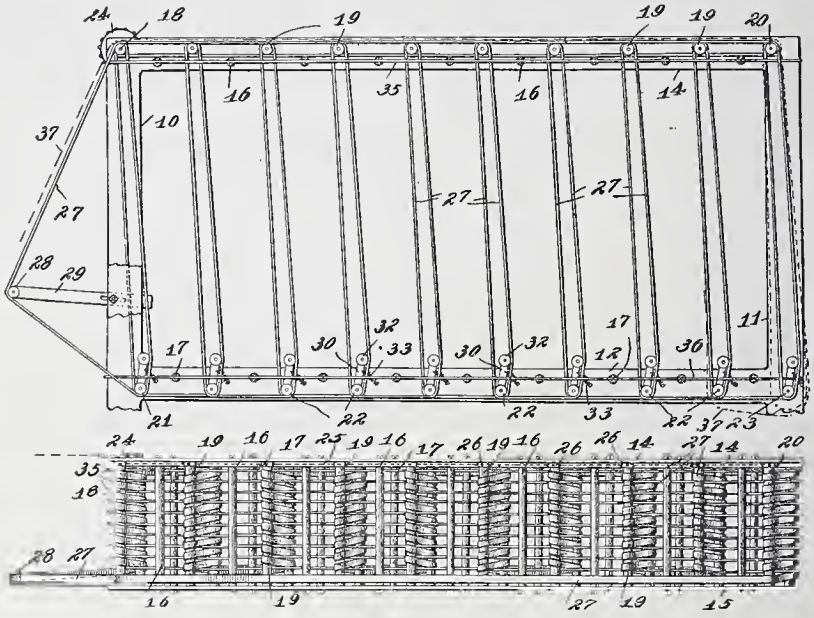

FIG. 273.—The Thompson Film Drying Machine

film follows the tape in its many turns about the several sets of rollers and by the time it reaches the end of the machine at which it was

A tightening device is provided for the tape 27, and comprises a roller 28 carried by an arm 29 adjustably fixed and projecting from one of the uprights 10. Tracing this tape from the tightening device as a starting point, it leads first over the end roller 18 and to the opposite end of the machine, turning downwardly about the roller 20, as shown most plainly in 2. Leading thence to the roller 23 and making repeated turns about these two rollers 20, 23, being wound spirally thereon. Reaching the opposite side of the machine, the tape 27 leads to the next lower roller 22 and is then wound spirally about this roller and its companion 19 of the upper set. Reaching the opposite side of the machine, the tape is now led to the next adjacent lower roller 22 and in similar manner spirally wound about this roller and the corresponding roller 19 of the upper set. Thus the tape is led from pair to pair of the rollers, the transfer from one pair to the next being made alternately at opposite sides of the machine, and the number of rollers in each set is such that the tape leaves the lowest roller at the same end at which it started from the tightening device.

Supplemental tightening devices are provided for taking up the slack in connection with each pair of rollers, all being alike, and consisting of a pair of arms 30, 31, pivoted upon the trunnions of the lower roller as 22, and projecting upwardly, a roller 32 being journaled in the upper ends of such pair of arms and adapted to bear against the inner face of the several turns of the tape about the pair of rollers with which this particular supplemental tightening device co-operates. Retractile springs 33, 34 are attached to the frame of the machine and to the arms 30 and 31, and drawing them away from the perpendicular, forcing the roller 32 against the tape and consequently drawing its several turns taut.

received, its coating will have become completely dried so that it is ready for use. It is separated from the tape below the tightening roller 28, and wound up for use. In another device, an endless band [1] of sufficient length to permit the drying of the films, and running edgwise, carries at equal intervals a number of suspenders, provided with guide bars and pins to catch the perforations of the film. The wet band of film is fed at a uniform speed over a fixed roller, and hooks on one of the suspenders; a loop is then formed, the length depending on the speed of the traveling belt and of the film, until the second suspender is reached, when it is again caught. After passing over the last suspender the film is run off onto a suitable winding roller,

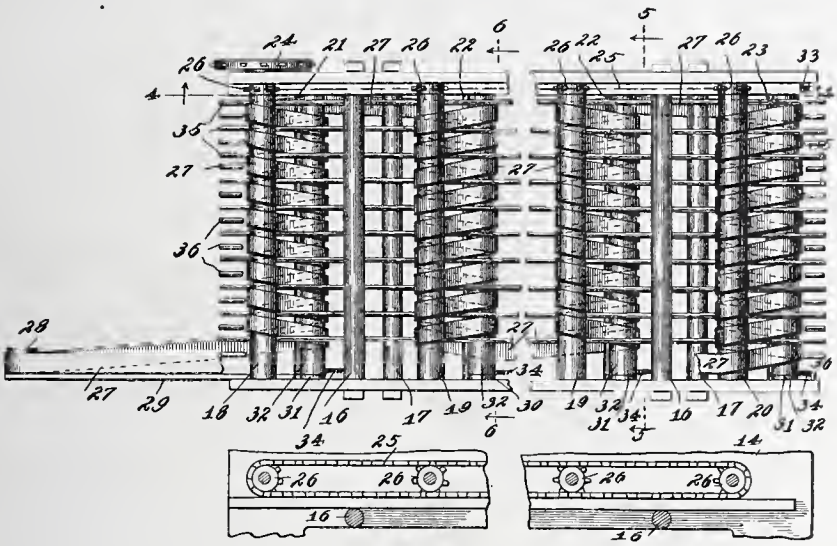

FIG. 274.—The Thompson Film Drying Machine.

rotating at the same speed as the feeding roller. Rollers fixed at suitable points near the feed roller and the winding roller effect the hooking and unhooking of the film.

Sensitizing Continuous Films. Irrespective of whether the "film support" in entirely nitrocellulose, gelatin or a combination, the sensitizing solution, prepared as described elsewhere, is deposited in the same way, and in a similar manner to the manufacture of the original film, such necessary precautions being taken to exclude daylight in order to preserve the sensitiveness of the photographic emulsion. The formation of film support, drying and application of emulsion may be arranged as a continuous process from fluid pyroxylin solution to marketable sensitized film. This requires a coating device and drying attachment as previously described, and from the drying

1. Comp. Gén. de Phonographes, Cinématographes et Appareils de Précision, E.P. 21099, 1909.

rollers the film is led through a fine slit into a dark room containing non-actinic light, in which is a continuous emulsion-depositing machine. The endless band of pyroxylin is led through baths of sensitive emulsion, over rollers for drying, and finally cut up into widths of $1\frac{3}{8}$ in. wide, which is the width taken by all moving-picture cameras. Convenient lengths are 500 and 1000 lineal feet. After the individual bands are wound on rollers or spools, the product is known in the trade as "raw film."[1]

Chronophotography, Motography, or more usually "Motion" or "Moving Pictures," as commercially employed at the present day for the entertainment of audiences, comprises a process whereby

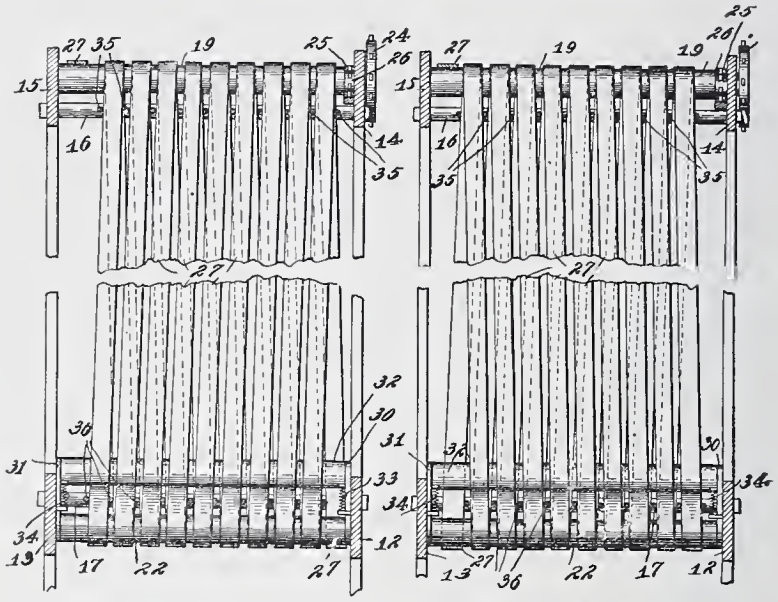

Fig. 275.—The Thompson Film Drying Machine.

a succession of photographic images pass before the observer, one being succeeded by another with such rapidity as to convey the delusion of motion. This deception is intensified by the fact that the objects in each succeeding picture remain stationary as compared with the immediate prior one, except some actor or object, the movement of one picture to another involving such a slight change that when a series of such pictures are flashed before the observer with sufficient rapidity, the graduation from one to the other becomes indistinguishable, each picture imperceptibly blending into the next succeeding one in the formation of the illusion of continuous motion. This illusion is heightened by the fact that the major portion of the picture remains stationary on the screen, the moving objects thus

1. For method of drying films of B. J. Edwards, see E.P. 11945, 1890.

appearing in greater contrast, which renders more realistic the deception of actual movement. The standard picture film measures $1\frac{3}{8}$ in in width, although a slight variation from this width is unimportant, because the edges of the film do not appear in the picture. The length of the film is immaterial, as two or more sections may be cemented together. The thickness is about 0.006 in., comprising about 0.005 in. of celluloid or pyroxylin film support, the depth of sensitive emulsion being 0.001 in. When the picture occupies all of the film, so that it fills the screen when projected, the individual pictures are 1 in. by $\frac{3}{4}$ in. in size, being 1 in. wide and $\frac{3}{4}$ in. high, and hence 16 to the lineal foot. The first picture on a strip of film in a series has its head at the end of the film and its foot toward the second picture in the series, from which it follows that the picture film is fed head-first through the projecting mechanism. The holes on each side of the professional film and designed to aid in feeding it through the projecting machine, are along each edge, outside the pictures, the pictures forming a long row 1 in. wide, and having as a border on each side a row of perforations, four holes per picture on a $\frac{3}{16}$ in. margin. The shape of the holes vary, but the number per picture is the same with all makers. The pictures in the strip are not necessarily $1 \times \frac{3}{4}$ in., but they must occupy that much space, irrespective of their size.

The usual length of standard film roll as placed in the projecting machine for a public exhibition is 1000 feet, containing 16,000 distinct and separate images, which are flashed upon the screen at the rate of about 16 per second, a 1000 foot reel giving an entertainment lasting twenty minutes, which is the usual length of time of a nickel entertainment. It is immaterial whether the 1000 foot length reel be composed of one or several continuous scenes. The standard unit of exhibition film has therefore been made as 1000 feet—technically called a reel—moving-picture theaters basing their entertainment on that size film, while film-renting exchanges compute their prices on the basis of reels of this standard length. The manufacturers furnish films perforated or unperforated as desired.[1] The roll as received from the manufacturer is covered with tinfoil and black paper and inclosed in a metal box hermetically sealed. In November, 1910, it was conservatively estimated that in the United States alone there were in active operation over twenty-three thousand separate moving-picture theaters.

The motion-picture camera must have a good, fast lens, of a focal

1. A reel containing 1000 feet of film forms a roll approximately 10 in. (25 cm.) in diameter, and weighs about 5 lb. (2.2 k.). In a one-hour entertainment nearly 4000 feet of film passes before the audience weighing 20 lb., and containing about 646,000 views.

length of 2–4 in., and arranged to take a picture 1 in. wide by ¾ high. Outside of the camera-box is a crank operating two mechanisms on the inside, the first being the film-shift mechanism by which a toothed roller is propelled with an intermittent motion. The unexposed film is placed in the camera, carried over this roller, the teeth of which catch the holes in the edge of the film strip. As the crank revolves, and intermittently jerks the toothed roller, the film is jerked down ¾ in., or just the height of a single picture, the action being the same as with the projection machine previously described. The second camera mechanism is the shutter, the function of which is to exclude all light from the film when the handle is not turned, but to admit the light through the lens during that brief period when the film, between jerks, is at rest. The shutter and film mechanism work in juxtaposition, thus exposing the film to the light from the lens and then jerking the exposed film to darkness, while the immediately lying unexposed film is jerked into line for exposure. This alternate exposure and light protection is continued at the rate of about 16 complete cycles per second, until a sufficient number of impressions have been obtained, except that being undeveloped, they are still negatives. The speed of taking the pictures is varied to some extent, depending somewhat upon the effect desired upon the projection screen, and the nature and extent of animation of the subject being photographed. Usually the pictures appear on the screen faster than they were taken from nature.

The methods of development applicable for moving pictures are dependent primarily upon the length of the individual films. The average camera has a reel box of capacity seldom in excess of two hundred lineal feet of film, and for such lengths, the so-called "drum development" method is extensively used. In this method the exposed strip is wound from the camera onto a drum, the drum being hung upon supports, and the sensitive film wound spirally, sensitive face outward. The drum is then turned toward the developer with its under surface immersed in the solution, then lifted to a tank of water and similarly turned; then to a tank of fixing solution, several tanks of water and finally through a weak glycerol solution to preserve its flexibility. The film is finally dried and the negative is complete.

The making of the print from the negative is comprised in the processes of printing, developing, drying and inspecting. As in making a photographic print, the sensitive surface of the material for the positive must be placed in contact with the film side of the negative and the proper quantity of light admitted through the negative to the material which is to become the positive print. As the motion-

picture negatives are 200–400 feet in length, special types of photographic printing frames are required, the machines used which print a portion at a time, either by the "step-by-step" or "continuous" processes until the entire strip is printed. The raw film stock on which the positive is to be printed is of comparatively slow emulsion. The development of the print is substantially the same as with the development of the negative, the final printing being done in a sectional machine.[1] [2]

Lantern Slides, Opals, and Transparencies.[3] The production of collodion lantern slides and transparencies is a rapid and inexpensive process, and one in which the operator may exercise considerable control over the character of results produced, and is especially rec-

1. In purchasing toy kinetoscopes, buy only such as take the standard film size previously mentioned. They are no more expensive, at any time you may desire to purchase a print of a film seen at some entertainment, or upon purchasing a larger instrument, the prints on hand will all be utilizable.

2. The mechanics of picture film formation, machine development, etc., are without the province of this work. The following chronological list of U. S. Patents indicate the development of the subject in the United States: 27572, 31357, 64117, 93594, 132676, 171986, 174206, 183550, 184847, 212864, 212865, 237389, 258164, 259950, 376247, 452966, 459140, 493426, 495822, 503927, 514707, 520030, 521705, 525991, 528140, 536569, 540545, 544480, 546093, 547066, 547775, 549309, 553369, 560367, 560424, 560425, 560800, 569875, 571496, 574851, 575153, 575761, 576542, 578185, 579882, 580749, 582311, 584228, 584305, 584311, 586953, 587526, 587527, 587729, 588014, 588916, 589168, 590766, 590837, 591452, 591858, 593376, 594094, 595620, 596687, 597759, 600113, 601951, 603771, 604733, 606993, 607761, 607783, 610560, 611231, 611590, 611591, 614366, 614367, 617435, 617643, 620357, 622451, 623410, 627526, 627952, 628413, 629063, 629582, 632472, 634560, 635466, 635500, 636642, 636715, 636716, 636717, 641717, 642163, 643718, 645477, 645949, 647529, 648019, 649730, 651494, 651691, 652714, 654585, 656762, 660006, 661119, 661516, 661795, 663153, 663785, 666495, 667436, 667618, 667635, 671111, 671498, 672710, 672711, 673329, 673992, 675962, 676532, 683910, 684343, 687624, 688648, 688652, 689857, 690815, 691411, 691493, 693856, 695003, 695916, 696869, 698125, 700709, 704449, 706113, 707934, 708148, 708303, 708813, 709342, 710339, 711440, 712462, 713312, 713876, 714845, 720931, 721261, 721718, 721954, 722382, 722393, 727948, 729375, 730964, 731282, 734136, 734242, 740318, 742632, 743419, 744251, 745956, 747684, 752394, 759693, 762519, 762948, 764788, 765580, 765621, 770100, 770705, 770937, 771280, 772647, 773981, 774632, 775000, 776723, 777381, 779364, 779954, 785205, 785237, 786683, 792245, 809981, 811341, 812537, 812845, 813633, 813860, 814406, 814662, 814663, 815584, 819514, 820441, 822438, 822730, 823913, 826112, 826446, 826524, 832112, 835209, 838610, 839152, 845551, 849499, 850567, 851387, 853699, 854199, 857069, 857697, 861169, 861832, 862559, 863517, 864314, 865106, 865593, 867185, 867682, 870504, 908560, 909404, 909534, 911070, 911710, 912137, 912365, 913328, 913530, 914729, 915359, 916325, 916346, 916410, 916751, 916788, 917078, 917310, 917697, 918883, 918884, 919324, 920263, 920901, 921273, 921537, 922302, 922743, 923432, 923511, 924147, 925326, 925697, 926662, 934242, 934894, 935167, 937174, 937367, 937746, 938629, 939135, 939274, 939337, 939634, 940479, 946031.

3. Instead of using glass already cut to the desired size for the production of the wet collodion slides, it is preferable to use larger pieces, and then cut them down to the desired size after they are finished. The additional trouble and expense involved in doing so is more than counterbalanced by the greater ease in manipulation gained by the presence of the margin around the slide. The difficulty in insuring even coating, even development and smoothness in varnishing at the edges, is obviated where the slides are cut down at the completion of the operations.

ommended as admitting of the production of good results from poor negatives. That it is at present largely used by large manufacturers is sufficient evidence of its practical utility. Whether the finest lantern slides are those produced by the wet collodion process may, or may not be so, yet it is a fact that collodion lantern slides possess a resplendency, sparkle and clearness often absent in slides made by other processes. In distinction from gelatin, collodion slides do not melt in the lantern. The following instructions applying to the formation of lantern transparencies,[1] are applicable, of course, to the preparation of stereoscopic and other transparencies, a lantern slide being in reality but a small transparency.

The usual method of producing the slides is by copying the negative in the camera, although it is possible to make lantern slides by contact upon a wet collodion plate.[2] The glass, as usual, should be scrupulously clean, edged with a rubber solution, and the usual gelatin substratum first applied as previously described. The plate, dried in a place free from dust, is coated with emulsion in the usual manner.[3] If the plates are to be kept for some time before exposure, they may be preserved by flowing over a mixture of pyrogallic acid 1 part, "bitter ale," 500 parts, the plates being immersed in this solution until all appearance of greasiness disappears, and finally

1 Phot. News, 1890, **43**, 631.

2. Generally by the use of a well-varnished negative which is slightly separated from the wet plate by a well-oiled mask of heavy paper. It is, however, of limited application and much inferior to the preparation of slides by copying the negative in the camera. For "Collodio-Chloride Emulsion for Transparencies," see W. Bolton, Sci. Am., May 22, 1897.

3. Care must be taken to shake the emulsion thoroughly, on account of the liability of deposition of the insoluble silver chloride or bromide on standing, it being insoluble in the alcohol-ether menstruum. Although collodio-chloride emulsion gives a wider range of color, collodio-bromide emulsions are usually satisfactory, and especially so in transparencies or lantern slides which are to be made in the camera. According to E. Foxlee (Brit. Jour. Phot., 1907, p. 578), the points to be kept in view are that the highest lights must be represented by bare glass on account of the appreciable transparency of the shadows. To secure these maximum conditions the silver bath may be made slightly more acid than is desirable for negatives. The collodion should preferably be iodized several months before use, or if newly iodized, tincture of iodine should be added to a deep color. The exposure should be a full one, as any approach to underexposure would lead to hard and inky-looking slides. See also the process of G. Macaire, E.P. 12152, 1899; W. Adams, E.P. 16785, 1888. For the method of producing celluloid magic lantern slides of F. Warlich, see E.P. 376, 1891. To transfer colored pictures on canvas, see J. Schuhmacher and G. Stade, E.P. 748, 1879. F. Rampichini (F.P. 415945, 1910) prepares an adhesive solution for sticking films together, in which nitrocellulose alone or with the addition of camphor or soluble coloring materials, or insoluble powders, is agitated in a solvent consisting of acetone alone or with the addition of methyl alcohol, ethyl acetate, benzene, nitrobenzene, glacial acetic acid, etc. A viscous liquid is the result, the proportions of the components being varied according to the porosity of the materials to be treated. After the application of the adhesive to the surfaces to be joined, pressure is applied, perfect adhesion being obtained after several hours' drying.

dried in the air without the aid of artificial heat.[1] The development with iron (ferrous sulphate) is arrested as soon as full detail appears in the heavy shadows, and the plate washed, fixed and again thoroughly washed. If intensification is necessary, it is applied as soon as the fixed slide is washed, the following solution being satisfactory:

Ferrous sulphate crystals (green vitrol)	50 gr.
Citric acid	100 gr.
Distilled water[2]	10 fl.oz.

1. A small portion of this solution is poured into a clean beaker, and then flowed over the plate as uniformly as possible, a few minims of silver nitrate solution added, the solution poured back again from the plate, the two allowed to thoroughly mix and then flowed over the film again. When the desired opacity has been obtained, the slide is well washed under the tap and placed in a dish of distilled water. In the case of subjects in pure line, as diagrams, blue prints, etc., intensification may be carried out after fixing and washing, by the use of cupric bromide and silver nitrate, the cupric nitrate formed as the result of precipitation of the silver bromide, being in no way objectionable. (Abney, "Instruction in Photography," 8th ed., p. 82). In intensifying lantern slides it is advisable to flow the intensifier over the plate two or three times before the silver is added to it, as it apparently permeates the film, and yields a warmer, more mellow tone than when the silver is added at first. In a proper exposure, sufficient density will be quickly obtained, but as soon as the solution shows indications of cloudiness, fresh intensifier should be used. See Phot. Mitth., 1897, **34**, 251.

2. According to A. Payne ("The Wet Collodion Process," p. 96), after the positive has been developed and well rinsed in water, it is examined by transmitted light, when the image should appear thin but possess a full range of gradation. If the image apparently lacks density, but possesses sufficient contrast, it may be strengthened by re-developing with pyro and silver, using the following formula:

No. I. Pyrogallic acid 10 gr., citric acid 25 gr., distilled water, 2 fl.oz.
No. II. Silver nitrate 20 gr., distilled water 2 fl.oz.

These solutions keep fairly well, but if a vegetable growth appears in the No. I, solution, it should be filtered before use. A small crystal of thymol will effectually prevent the formation of vegetable growth in aqueous tartaric and citric acid solutions, without otherwise affecting them. The well-washed negative is drained upon clear bibulous paper, after which equal parts of No. I and II solutions, previously mixed, flowed over the drained plate, and then returned to the measure. This operation is repeated until the image has attained the desired density. It is important to note that unequal density may be produced by pouring the re-developer upon the same portion of the plate, and the solution should not be used after it has become thick. If a bluish precipitate is produced during re-development, it may be due to the lack of free acid or the use of old pyro. If the plate becomes stained as the result of prolonged intensification, the application of a 5% aqueous acetic acid will remove it, after which the plate is thoroughly washed. If the image is overintensified, which is recognizable by the shadows being opaque to the light in the optical lantern, it is difficult to remedy it. Therefore, it is advisable to stop re-developing the image while it is apparently too weak, for the slide may be re-developed, if too weak, after it has been fixed. Should the image apparently be wanting in contrast when it is examined after re-development, it is preferable to apply the re-developing solution after the positive is fixed, for re-development before fixing produces a soft result; in contradistinction to the result obtained if the slide is re-developed after it is fixed. It is possible to re-develop the image both before and after it is fixed, if it is desired to still further increase the contrast which was obtained by the re-development before fixing. The slide, of course, should be well washed after each operation, and

If the plain silver image is not of a very good color—and this is often the case—some method of toning is usually resorted to, which may be either of the following:

Palladium chloride	15 gr.
Concentrated nitric acid	3 minims
Distilled water	15 oz.

or

Platinic chloride	15 gr.
Concentrated nitric acid	3 minims
Distilled water [1]	15 oz.

especially after the application of the fixing solution. If the positive appears too dense, it may be reduced by the formula of H. Farmer as follows:

No. I. Sodium thiosulphate (hypo) 4 av.oz., water 20 fl.oz.

No. II. Potassium ferricyanide (red prussiate potash) 1 av.oz., water, 10 fl.oz.

The transparency is immersed in a solution composed of 4 oz. No. I, to 1 dram No. II, and rocked until it is sufficiently reduced. If it is desired to entirely remove a portion of the image, as, for instance, the background from a portrait, or patches in the sky owing to a faulty negative, the transparency is, after fixing and washing, allowed to drain thoroughly until it becomes surface dry. The reducing solution above is then painted on the spots by means of a fine camel-hair brush, taking care that the solution does not flow onto the surroundings. If the subject is a landscape, and it is desired (say) to add clouds to a negative in which they do not appear, the following procedure is applicable, if the sky portion is not clear glass. A suitable cloud negative is taken, and an image made of it to scale on another piece of glass. Then all image portions on the sky transparency are removed by reducing, leaving an amount to correspond with the clear glass portion of the transparency, and the two are then bound together after varnishing. If the sky negative has been made for the landscape negative, it is preferable to copy it with the glass side toward the lens to allow for reversal The slides after drying are carefully spotted and varnished in the usual manner.

1. The above two are stock solutions, and should be diluted with 7–8 parts of water before use. The transparency is placed in a flat dish, the toning solution poured over it, and the slide rocked until a satisfactory color is obtained, the plate being then washed. The platinum formula produces a fine black tone, the palladium more on the brown shade. Bluish-black is produced on the silver image by the use of the following gold toning solution: Ammonium sulphocyanide, 20 gr.; gold chloride, 2 gr.: distilled water, 10 fl.oz.

A brownish-black tone is obtainable by first bleaching the image by flowing over the slide a small quantity of 1% iodine solution containing 4% potassium iodide, flowing this over the plate several times. The bleached image consisting of silver iodide is well washed, the slide slightly reduced by the application of a 1% aqueous potassium cyanide solution, the transparency well washed again and finally blackened by immersion in a 2% aqueous sodium sulphide solution. The slide, after final washing, is dried. As this operation alters the tone of the image as well as intensifying it, this point must be allowed for when the slide is being developed. By the use of a uranium toning solution, it is possible to intensify the slide, and at the same time tone to any color between red and brown. The toning solution is as follows: Uranium nitrate, 2 gr.; potassium ferricyanide, 1 gr.; acetic acid, 30 minims; water, 1 fl. oz. The image turns first brown, and then gradually into the red, the intensification increasing with change of color. The image must be carefully washed during this process and be immediately removed and washed when the desired tone is reached. If the slide is heated in order to dry the varnish, the color may be discharged by the heat, but will usually reappear upon cooling the slide.

Irrespective of the method of toning adopted, the slide is finally well washed and dried, and varnished with a transparent varnish, such as a 4–6% solution of dammar in turpentine or benzol, the dammar being carefully paper-filtered before use. If this does not result in the formation of a clear varnish, some of the clarification methods described in Chapter IX should be resorted to.[1] This process is especially suitable in the preparation of lantern slides of line drawings. These are made in a manner entirely to the similar methods described under "Process Work." It may often be of advantage to use line negatives as the lantern slides, the lines showing in white upon a black ground, which as regards clearness is a decided improvement. If a positive image is desired, it may be obtained by copying the line negative upon a wet collodion plate, the negative being preferably backed with a sheet of opal glass.

The method of producing transparencies patented by G. Schnitzler[2] relates to the preparation of flexible transparent positive photographs. Celluloid, either colorless or tinted and about the thickness of an ordinary sheet of paper, is used for the support of the sensitive film on which photographs are printed from the negative in the usual manner. These photographs can be looked at from either side and do not require to be mounted.

Collodion transfers are usually produced by coating a sheet of talced glass with an iodized collodion, sensitizing, developing, fixing etc., in the usual way. The film is then transferred to a sheet of carbon double transfer paper. This process is more often used in enlarging.

Ferrotypes and Direct Positives on Glass. The direct production of positive pictures by wet collodion is a comparatively simple procedure, and was early exemplified in those curious portraits of our grandparents, which were mounted in a gilt case, leather-backed frame, and erroneously known as "daguerreotypes." In reality they are positive images taken direct from the subject, being unusually thin and underexposed negatives, in which the silver is precipitated

1. The varnish is applied in the eold, it being imperative that it be free from eolor, or nearly so, and eontain no observable suspended matter.

2. E.P. 7867, 1897; in the proeess of producing "eollodion enamels" as patented (E.P. 6501, 1893) by F. Forster and G. Roekwood, the sensitive medium upon whieh the photographie pieture is printed from the negative is surfaeed with a mixture of gelatin and metallie oxide, such as oxide of eopper, iron, or gold. The print is then transferred to a temporary support such as gelatinized paper. It is developed on the temporary support and then transferred to a permanent glass support. The eollodion is then washed away with ether, and the pieture film is rendered insoluble by ehrome alum and dried. A vitreous flux of oxide of lead, borax, and sand is then dusted over the film and fused in a kiln.

in a grayish-white condition, the black background being produced either by means of black velvet, or by pouring a black varnish over the image—usually the former. These so-called "collodion positives" are merely thin negative pictures, which appear as a positive only when viewed against a dark blackground by reflected light. The dense parts of the image, which correspond to the high lights of the subject, reflect the most light and hence appear as the brighter parts of the picture. Less light being reflected in the half tones, they appear darker, the shadows being supplied by the black background.[1] These photographs are very permanent, and are often seen delicately tinted with pigment colors.

Positives upon metal plates or ferrotypes, as they are usually called, are reversed as regards right and left, unless a mirror or prism is used. They are the "tin types" produced by the itinerant photographers at country fairs and seaside resorts, and are very expeditious methods of picture formation, as evidenced by the fact that "you can have your picture taken and finished while you wait." For the production of either ferrotypes or glass positives, the coating and sensitizing is practically the same, and is carried out in a manner similar to that described for negatives. The collodion used is especially iodized for this "positive" work, either by using an old solution which is dark amber in color from liberated iodine, or by adding a small amount of Pharmacopeal tincture of iodine to a freshly iodized collodion. The collodion must produce a thin delicate image, so that the black background (glass positive) will give sufficient reflection to bring out the details with sufficient contrast. Where glass is used as the support, the rigid methods of preliminary cleaning and selection of flawless glass must not be omitted. The glass is preferably coated with substratum, collodionized, sensitized, and developed as previously described. Ferrotypes are cleaned in the following manner: First gently rubbed either with alcoholic iodine solution or old iodized collodion, or if grease is suspected, a linen cloth and a 3% caustic potash, either aqueous or alcoholic, solution should be thoroughly rubbed on the japanned surface. After well rinsing with water, dried, and a small amount of alcohol finally rubbed over the surface and dried gently with a soft cloth, the coating solution is poured over in the following manner:

1. In order to obtain the best possible effect, it is necessary that the exposure be prolonged no longer than necessary, and the development not unduly continued, and that the silver is deposited in as light a form as possible. Where the positive is made upon glass, the black backing has to be supplied, whereas with a ferrotype, it is given by the support itself. It is possible to show the image reversed or not, depending whether the film side is facing the observer, or on the inside. In the first case we have the reversal, in the latter not. For the better protection of the film, it is customary to place the coated side in.

It is best to hold the plate by the thumb and fingers in one corner, rather than by means of the pneumatic holder, for the iron plate is so thin that it bends and buckles under the atmospheric pressure, and hence leads to uneven coating. The coated surface must not show chipped places or scratches in the enamel, preservatives being used if the plates are not immediately wanted, and generally for those intended for lantern slides. Drying of the collodion should be preferably at a temperature not exceeding 45°, and in order to ascertain whether the plates are in proper working order, it is discreet to develop one plate without previous exposure, developing for about one minute, washing and fixing. When properly prepared, the black enamel should not be dulled by the silver deposit, the appearance of the plates being transparent and without bubbles or specks. The coated plate is sensitized in the usual silver bath, as has been described, and then exposed in the camera.[1] Glycin and hydroquinone are suitable developers, the application of which will vary from fifteen to twenty seconds. The ferrotype developing solution of J. Spiller is as follows.

Ferrous sulphate crystals	100 gr.
Potassium nitrate	140 gr.
Glacial acetic acid	5 fl. drams
Nitric acid 42° Bé	20 minims
Water, sufficient to make[2]	10 fl.oz.

As soon as the image has fully appeared the plate is well rinsed, fixed in potassium cyanide solution,[3] dried, when the process is complete. This procedure gives a silvery white deposit of silver, which contrasts strongly with the black enamel background, and hence produces sharp lines and a clear-cut and pleasing effect.[4] In order to protect

1. In placing the sensitized ferrotype plate in the camera, it should rest upon pieces of clean blotting paper placed in the lower corners of the plate holder, and this should be backed up with a rigid support, e.g., a sheet of glass or stiff cardboard, to prevent the springs on the door of the dark slide bulging the center of the plate outward.

2. Upon mixing ferrous sulphate with potassium nitrate and free nitric acid in the quantities above stated, ferrous nitrate and potassium sulphate results from the interaction, this giving a whiter deposit, it is claimed, than when ferrous sulphate alone is used. Alcohol is sometimes added in the proportion of 4–5% by volume, to assist in the reaction and penetration of the collodion by the developer. The color of the silver deposit may be changed by the introduction of various developers and color-sensitizers such as pinaverdol, homocol, etc. the coldness of the white image being toned down to a pink shade, resembling somewhat that of flesh tint. Color sensitizers often make the plates speedier and work more clearly, and are less apt to fog.

3. Prepared by dissolving 1 oz. potassium cyanide in 20 oz. distilled water.

4. Among the preservatives for ferrotypes a 6% solution of rock candy in distilled water has been recommended, care being exercised not to overheat the plate in drying the preservative. Aqueous gallic acid has also been recommended for this purpose. The various preservatives undoubtedly exercise a great influence

from scratching, the ferrotypes are usually carefully varnished with a transparent coating, 5% mastic or sandarac in "benzol 50%" having been found very satisfactory, especially if the resin-benzol solution has been properly clarified by paper filtration previous to use. The ferrotype is not cut down to the edges of the image until after varnishing.

If the plate is developed for too long a period or has been overexposed, the shadows will be indistinct and veiled, while if the exposure has been too short or the plate underdeveloped, the shadows appear too black. In any event, the development is to be stopped as soon as the detail appears in the darker portions. With glass it is possible to examine the image by transmitted light, and it will be observed that the best pictures result when the image is thin and free from any veil, any prolongation of development beyond this stage producing an inferior result from obscuring the definition of the image.[1]

Photographing on Wood. In photography on wood for wood-engraving purposes, collodion emulsion has been found very satisfactory as it produces a photographic film sufficiently thin to permit of subsequent tool work without chipping. The wood block is prepared in the usual manner by a gelatin substratum containing zinc oxide or other white pigment. It is advisable to wax the back and edges of the block to render it waterproof. Ordinary collodion emulsion is preferably diluted with about one volume of alcohol-ether, the block being coated in the usual manner. The development, which is done in the hand, should take less than five minutes. Any alkaline developer may be used, the following being recommended by H. Klein:[2]

Water	10 oz.
Metol	75 gr.
Sodium sulphite	1.25 oz.
Sodium carbonate	1.75 oz.
Potassium bromide	10 gr.

on the speed of the ferrotype process, a suitable preservative being selected according to the requirements of the operator, after experimental trials.

1. According to Lüppo-Cramer (Z. Chem. Ind. Kolloide, 1909, **3**, 135, 170) gelatin plates give a blacker, better negative than collodion plates, because gelatin is a better colloidator and gives a silver more capable of adsorption. The ferrotype may be obtained from gelatin plates, using a developer containing a solvent for silver bromide, or from a collodion plate coated with gum or tannin.

2. "Collodion Emulsion," 1905, p. 46. The metol is dissolved in water before the sulphate is added, subsequently diluting with an equal volume of water. Edinol (patented developer of F. Bayer & Co.) is also recommended. Glycin appears unsuitable because the silver deposit is of a yellowish-gray color, and does not bring out the fine details in reflected light. It is fixed in sodium hyposulphite (thiosulphate) 1–4. If a small quantity of glycerol be mixed with

It is important to wet the block as little as necessary, and to see that nothing remains on the surface which might clog up the engraver's tools, or cause the wood to become friable, which impairs the life of the plate by causing the delicate lines to crumble away and blur.

Isochromatic Collodion Emulsion. E. Albert,[1] who was the first to prepare color-sensitive collodion emulsions of high rapidity, has perfected an emulsion called by him "Eos," which is made isochromatic for three-color photography by dissolving the silver salt of eosine in ammonia, and neutralizing the alkali with picric acid, the preparation containing silver eoside and ammonium picrate. By this treatment the tendency to fog is prevented while the ammonium picrate absorbs the ultraviolet rays.[2] The emulsion is flowed on the

the emulsion it will make it more flexible and also act as a preservative, and so insure quicker development and more brilliant detail.

The patented (E.P. 8578, 1900) process of J. Paterson, W. Dickson and G. F. Kerr, relates to a method of obtaining a printing-surface on a lithographic stone or the like from a photograph. If the subject to be printed in monochrome is a wash drawing, etching, or other picture, a photographic reversed negative is obtained from the picture in the usual way, preferably through a screen. A positive is printed from this on glass. A glass is coated with stripping collodion (collodion and castor oil) stained with a non-actinic dye, over which is coated a layer of bichromated gelatin. This film is exposed under the positive above mentioned, and the negative obtained is developed with water. It may then be treated with dye to render it more visible. A piece of transparent paper is squeezed on the surface, and the negative film with the collodion film is stripped from the glass. A second sheet of transparent paper is squeezed on the collodion film, the first piece of paper being removed. The film is then squeezed on the lithographic stone, the second sheet of paper is stripped off, and the collodion is removed by a solvent. Transfer ink is then applied, and penetrates through the interstices of the negative to the stone, a positive printing-surface being thus produced. The above method may be applied to the three-color process.

1. Phot. Zeit., 1888, **12**, 166; abst. J.S.C.I., 1888, **7**, 690; Phot. Corr., 1897, **34**, 193; D.R.P. 43098, 1887; Sci. Am., 1888, Dec. 8. See also "Orthrochromatic Collodion Emulsion," Eder, Phot. Archiv., 1888, **29**, 177; abst. J.S.C.I., 1888, **7**, 690. For "Photographing of Paintings by Means of Eosine Plates," see v. Hübl, Phot. Rundsch., 1893, **7**, 3.

2. Albert has also shown that a solution of æsculin, although colorless, changes the ultraviolet into fluorescent rays, and that potassium bichromate absorbs the violet immediately and completely, even in quite dilute solutions. An important factor in three-color negatives is to get the plate as sensitive as possible to red. Cyanin was the first dyestuff proposed which did this satisfactorily. Pinacyanol (D.R.P. 172118, 175034, 178688) is a very satisfactory red sensitizer, especially in the length of time which pinacyanol-sensitized plates will keep sensitized. Erythrosine or pinachrome (D.R.P. 154475) are good sensitizers for green. For collodion emulsion sensitive to red, 1 gr. pinacyanol in alcohol 2 oz., and this added to 200–225 oz. collodion produces about the right intensity. After the collodion is flowed on a glass plate, and has hardened from evaporation of the solvent, the excess of dyestuff is removed by washing the surface of the plate, the same as with gelatin plates.

N. Amstutz ("Photo-engraving," 1907, 357) gives the following method for determining if the darkroom is safe for resensitized plates: "Put a cyanin-sensitized plate into a plateholder in absolute darkness, pull the slide of the plateholder half way out, and expose the plate to the light used in the darkroom for from three to five minutes. Develop the plate first in the dark and see if there is not a trace of exposure on the half which was uncovered to the darkroom light." As sensitizers

plate in the dark room, in the same manner as with ordinary collodion, when the plate is ready for exposure. When photographing through the blue-violet screen no sensitizer is required, and when photographing through the green screen, a sensitizer furnished by him and called "A" is used. The exposed plates are developed in the usual manner with hydroquinon. As the emulsion is not as sensitive as gelatin, strong illumination or a relatively longer exposure is necessary.

Collodion in Color Photography. In the method of the Miley Color Photograph Company of New York [1] separate pigment photographs are made on bichromated gelatin films, having inert red, yellow and blue pigments respectively, which have a color value substantially that of the primary color it represents. A layer of collodion is directly superimposed on the pigment layers, between the surface of the film and a thin layer of wax on the surface of the temporary support. G. Selle [2] coats a glass plate with a rim of gelatin and an emulsion of zinc white in collodion is poured over it. When the emulsion has dried it is coated with a solution of pyroxylin in amyl acetate to waterproof it. The plate is then sensitized in the regular way. In another method, [3] colored photographic prints are produced by using as the sensitized material leuco-bodies of organic dyestuffs dissolved in collodion, leuco-malachite green being specified. An alcoholic solution of the color is added to a collodion solution, the image being fixed by dissolving off the unconsumed leuco-body by the aid of cellulose nitrate non-solvent, such as chloroform. The sensitiveness of the preparation may be increased by the addition of certain oxygen carriers such as quinoline or platinic chloride. It is claimed this process is especially suitable for tri-color photography. In producing colored images by bleaching out,[4] the dyestuffs of the group known

for collodion emulsion, pinaverdol 0.2% in alcohol, 1 oz. to 25 oz. collodion emulsion has been found to work satisfactorily. For panchromatic work, above strength of pinaverdol 3 oz.; 0.2% ethyl violet ½ oz.; collodion emulsion 100 oz. For red sensitiveness, pinacyanol 0.2%, 3 oz., in collodion emulsion 100 oz. As a darkroom safe light may be mentioned naphthol yellow in collodion flowed over two ground glasses placed face to face. This is safe for slow plates not overly exposed. Aurantia collodion, auramine collodion and chrysoidin collodion are deeper. A bright red screen may be formed from naphthol yellow and concentrated methyl violet. According to S. Shepherd, a safe light for red-sensitive plates is obtained by coating with collodion stained with brilliant green G., two gelatin plates stained in naphthol yellow and aurantia solution respectively.

1. U.S.P. 711875, 1902; E.P. 17485, 1902.

2. E.P. 12515, 1899; 8498, 1903. F. Bayer & Co., E.P. 23722, 1903. See E. Shepard and O. Bartlett, E.P. 24234, 1902. The Franklin Tarsulat, E.P. 14073, 1903, treat collodion emulsions with di-iodofluorescin to increase their sensitiveness to particular rays.

3. Meister, Lucius & Brüning, E.P. 4994, 1904. See G. Selle, E.P. 12516, 1899; G. Sershall, and J. Kirk, E.P. 17122, 1897.

4. H. Stobbe, D.R.P. 209993, 1907; fulgides are anhydrides of the fulgenic acids obtained by condensing certain aldehydes and ketones with esters of itaconic and teraconic acids. Cf. Ber., 1904, **37**, 2237; 1907, **40**, 3372.

as "fulgides"[1] are decolorized by the action of light, especially in presence of ether, chloroform, gelatin, collodion, etc.; their sensitiveness is further increased by iodine, nitrobenzene, phenol ethers, and essential oils, decolorization being complete in less than one minute in some cases. It is proposed to utilize these "fulgides" for the production of colored prints, for example, a red and a yellow "fulgide" and a dicyanine or pinacyanol may be applied to paper, which is sensitized by phenetol and exposed under a suitable negative. After removing the sensitizers by benzene, the prints are stable in the dark. It is possible to make them stable in light for a short time by treating them with a gum or resin, which delays further bleaching of the dyestuff.

F. E. Ives[2] has patented a method of making a colored photographic print, which is carried out as follows: Clean sheets of glass are leveled and coated with an amyl acetate pyroxylin lacquer, being allowed to dry spontaneously, although last traces of solvent may be driven off by artificial heat. The pyroxylin surface support is flowed with a solution of fish glue[3] and ammonium bichromate, spread with a photoengraver's whirler, and dried by moderate heat while whirling. The collodion film bearing the bichromated fish-glue coating, is stripped from the glass and exposed to daylight or the electric arc to render the glue insoluble, with the collodion side next to the negative. By immersion in running water the print is fully developed in a few seconds, those portions of the sensitized coating which have not been acted upon by the light being dissolved and washed away, leaving a relief print which may at once be immersed in an aqueous dye-bath, such as a solution of "neptune green" for a peacock blue print, a mixture of rhodamine and eosine for a crimson pink print, and brilliant yellow for a yellow print. They are sufficiently colored in not to exceed a few minutes, then rinsed off and hung up to dry. The print is in low relief because of the very thin sensitized coating in which it was produced. The finished film color prints may be superposed in register between glasses to make trichromatic lantern slides or window trans-

1. See Gerard, E.P. 2694, 1887; G. Sershall, E.P. 29261, 1896; J. H. Smith, and W. Merkens (E.P. 2461, 1907) produce a photographic film consisting of one or two layers of bleach out dyes for two or more color photography, the basic dyes resting in the finished film in a layer of nitrocellulose and acid dyes in layers of gelatin.

2. U.S.P. 960939, 1910. Improvement upon a method published in Jour. of the Camera Club, 1894, p. 63. J.S.C.I., 1910, **29**, 542.

3. Celluloid films were found to shrink and buckle from the gradual evaporation of the camphor, while gelatin was unsatisfactory because the small amount of bichromate which may be incorporated with it without crystallation in drying, was found to be too thin to bring out detail in the prints from both ends of the scale of gradation from black to white of the negative.

parencies, or upon paper or other opaque white surface to make composite color prints to be viewed by reflected light. In making trichromatic lantern slides, the number of reflecting surfaces is reduced by cementing two of the film color prints to glass, by laying them down on a wet gelatin-coated glass, and allowing to dry. They are then placed face to face, and the third print on a collodion film held in place between them, with the images all brought into register, after which they are bound together to form the lantern slide. The color prints may be superposed on paper by pasting one face down on the paper, and after it has become dry by evaporation through the paper, the collodion print may be pulled off, leaving the print on the paper. The second print may then be pasted down on the first one and likewise pulled off. The amyl acetate-collodion is made by dissolving pyroxylin in amyl acetate, or the trade-product of suitable consistency known as "albaline" may be used.[1] In a recent invention [2] collodion prints and cinematographic films are first toned to obtain a suitable monochrome ground color, and then colored by hand or otherwise. In preparing color prints on paper by the bleach-out process,[3] it is necessary to use a vehicle which will take the three dyes and at the same time prevent them from penetrating the paper, which limits the available substances to gelatin, collodion, starch, cellulose acetate, and albumen. The first two require a resin coating on the paper to prevent transfusion of the dyes. It is sufficient to employ three acid dyes in gelatin on collodionized paper, or three basic dyes in collodion on gelatin or simple baryta-coated paper.

Collodion Color Screens for Photography.[4] In the production of three-color screens by the process of J. Bamber,[5] separate sheets of gelatin are dyed violet, green, and orange-red, the dyed sheets are dried and treated with 15% formaldehyde solution, and

1. Whatever pyroxylin solvent is used, the product formed should not leave so porous a film as to absorb color in the dye baths and for this reason the ordinary ether-alcohol collodion is said to be unsuitable. For use of "amyl acetate-collodion" in photography see Wilson's Mag., 1907, **44**, 338.

2. Comp. Générale de Phonographes, Cinématographes, et Appareils de Précision, Paris. E.P. 14743, 1909. For the Dufay Dioptichrome Process see F. Limmer, Phot. Rundschau., 1910, **24**, 143. For Askau Prints from Negatives, see J. Rieder, Phot. Rundsch., 1910, **24**, 151, in which transparence is obtained by liberal but careful application of zapon lacquer. See M. Anthes, U.S.P. 959692, 1910.

3. W. Merkens, Brit. Jour. Phot., 1910, **56**, suppl. 1; from Rev. tech. indust.

4. The practical worker should not attempt to make his own color screens, for the makers of colored plates have scientifically worked out the colored filters best adapted to their particular plates. The filters therefore should preferably be purchased from the firm from whom the sensitive plates are obtained. The glass in color filters should be optically flat, and used inside the camera in grooved slides, just behind the rear combination of the lens.

5. E.P. 3252, 1908.

again dried. The sheets are now immersed in water until they are fully expanded, and they are then finely ground, preferably at a temperature of about 200° F. The powdered gelatin is elutriated, for example in petroleum spirit, and the three portions of colored grains mixed in such proportion as to present a neutral gray tint by reflected light. The mixture is spread closely on a celluloid or glass sheet, then coated with a solution of celluloid and a resinous gum, and the whole is dried. If the screens be now exposed to the air, each grain will absorb sufficient moisture to cause it to expand, and thus a continuous film of colored gelatin is formed. Rapid expansion of the grains may also be produced by spraying with a solution of gelatin. The screens are now pressed between rollers, covered with suitable varnish, and again pressed, when they are ready to receive a coating of sensitive emulsion.

According to the description of G. Whitfield [1] a film of collodion or other vehicle is mounted on a suitable support of glass, etc., and dyed with an aqueous or alcoholic solution of one of the required colors. A protective coating of india-rubber, guttapercha, bitumen, or paraffin wax is then applied to cover a portion of the colored film in the form of small spots; this is preferably done by spraying a solution of the protective agent in naphtha, etc., on the film by means of an aerograph spray or similar device. The dyestuff is now removed from the uncovered portions of the film by dissolving or bleaching, and these are then dyed with a second color, and a further series of spots of the protective agent applied to the film. This treatment is repeated with as many colors as required (usually three), and the protective coatings are finally removed, the result being a screen composed of a number of small adjacent areas colored with the different dyestuffs used.

In another recent method [2] sheets of celluloid or other suitable transparent, plastic material are impressed in an etched metal line matrix, when a series of parallel recesses is formed on the sheet. The surface is printed with printer's ink, and the sheet, after the back has been properly insulated, is stained with an alcoholic solution of a suitable dyestuff: the ink is now removed, and the surface of the sheet printed with a second color. If it is desired to make three or more color screens, the sheets are again impressed with an etched matrix, the resulting recesses being at right angles to the first set, and the process repeated.

In the preparation of "Omnicolor" plates,[3] after coating the

1. E.P. 9044, 9693, 1908.
2. Verein. Kunstseide-Fabr. A.-G., Kelsterbach a/M., E.P. 21839, 1908.
3. The "Omnicolor Plates." M. Jougla, Bull. soc. franc. phot., **25**, 199. "Preparation of the Screen of the Omnicolor Plate," F. Limmer, Phot. Rundschau, **23**, 120; Phot. Chronik, **16**, 277.

glass with a gelatin or collodion film, narrow lines are printed on it in fatty violet ink, the spaces between the lines being twice as wide as the lines. The plate is then bathed in a yellow dye (aqueous solution?) which dyes the film between the violet lines, but does not penetrate the fatty ink. A second printing is made, crosswise, in light-blue fatty ink. This does not show upon the violet lines already printed, but gives green where it crosses the yellow spaces. The plate is finally bathed in a red dye in aqueous solution, which penetrates only the parts not coated with the inks and gives the red elements. The interesting feature of the process is that neither red nor green is applied primarily as such, the green being a mixture of blue and yellow, and the red a mixture of red and yellow.

The J. Szczepanik method of making a three-color screen depends[1] on the absorption of acid dyes by collodion and basic dyes by gelatin. Three gelatin solutions are dyed with suitable colors, then evaporated to dryness, finely powdered, mixed in proper proportions and dusted over a damp collodion plate. The dyes transfuse into the collodion, and the powder may then be washed away, leaving a three-color mosaic of very fine grain and great transparency.

This differs from the Szczepanik-Hollborn "Veracolor" plate[2] in that with the latter three-gelatin or gum solutions are dyed separately, evaporated to dryness, and pulverized. The powders are mixed and dusted over a moist collodion plate. The color transfuses, the powders are washed off and the silver emulsion coated on the dyed collodion.

R. Berthon has obtained protection for a three-color photographic process[3] in which photographic plates or films are prepared, having on one side a panchromatic emulsion, and on the other side a series of very small transparent spheroidal grains or cylindrical bands, close together; these may be formed by embossing a gelatin or celluloid film. Plates made in this manner are exposed with the emulsion farthest from the lens, behind an objective in which is fixed a screen composed of the three fundamental colors. The resulting negative is reversed, and may then be projected through the objective and screen, giving a colored projection. The grained or embossed screen acts as a series of lenses in front of the emulsion, causing the separation by refraction of the images of the screen projected in microscopic size at points close together on the sensitive film; the

1. F. Limmer, Phot. Korr., **46**, 373.
2. Z. ang. Chem., 1908, **22**, 14. See A. Baumgartner's process, E.P. 22138, 1895.
3. E.P. 10611, 1909. See also O. Witt, D.R.P., W–14564, 1893.

result is similar to that obtained by a grained or lined screen, except that in the present process more light passes to the emulsion.

The United Artificial Silk Company [1] prepare a screen by impressing close parallel lines on a celluloid plate with a grooved roller. The tops of the grooves are covered with printing-black, and the plate dipped in a blue dye. The black is removed, the line-structure printed crosswise, the black applied again, and the plate dipped in green dye. The black is removed once more and the plate again dipped, this time in a red dye.

The invention of F. Dyer [2] relates to the preparation of grains or particles suitable for straining for use in preparing color screen plates. Exceedingly fine filaments of collodion, celluloid, or similar substance are formed by passing their solutions, separated into thin films or other attenuated form, into an "electrically polarized atmospheric field, produced by the convective passage through an atmospheric medium of an electric current of high tension." The volatile solvent is thus evaporated, leaving very fine fibers or filaments, which are now rendered brittle by cooling, e.g., by liquid air. While brittle, the fibers are crushed to powder, and the particles sifted to suitable size and stained in the usual manner.

A. Lumière & Sons [3] provide their plates for color photography with a multicolor filter composed of filter films for the different elementary colors. In place of the heretofore used glass, shellac, gelatin, and the like bits, starch cells, yeast spores, bacteria, and the like, of definite form and size, appropriately colored, are employed, being applied to the plate with a fine brush in as nearly as possible a solid single layer, with a vehicle of preferably a mixture of gelatin with glycerol or sugar, the whole being given a coat of varnish best composed of a solution of scammony resin in amyl acetate or the like. Two layers are built up in this way, and the combination colors, in addition to the red, blue, and yellow colors given to the ultimates used, are produced where the appropriately colored particles are superposed one upon the other. The usual polychromatic silver bromide gelatin sensitive film is formed upon the surface.

Collodion Emulsion and Photospectroscopy. Until recently, but little attention has been paid to the use of collodion emulsion

1. F. Limmer, Phot. Rundschau, 1909, **23**, 297.
2. U.S.P. 947965, 1910; also E. Spitzer, E.P. 249, 1900.
3. D.R.P. 172851, 1904. See Lumière, F.P. 409044, 1909, and First and Second Additions thereto; E.P. 29273, 1909; 4912, 5377, 1910. The author has prepared simple color filters by dissolving a paper-filtered pyroxylin in equal volume of alcohol and ether to a 6% solution to which the desired dyestuff in amounts of 0.1–0.3% is added. The colored collodion is poured over a carefully cleaned glass plate and allowed to dry in a warm place free from dust.

for spectrographic work. In the earlier days of collodion photography it is worthy of note that W. Abney prepared a collodion emulsion sensitive to rays of a wave length of λ=20,000 A. U., photographing the solar spectrum to λ=10,000 A. U. According to Phil. Trans., 1880, Abney prepared an emulsion which was sensitive to the rays emitted from boiling water.

According to H. O. Klein, the great progress in orthochromatic dry plate manufacture—the valuable qualities of the older processes, so eminently suitable for spectroscopic work—were for the time being overlooked. However, the increased interest in collodion emulsion as the result of the rapid expansion of three-color work have greatly simplified the process, and the advent of the *iso*cyanine and other dyestuffs have once more drawn the attention of the spectrographer to the valuable qualities of collodion, chief among which in this connection may be mentioned:

1. Fineness of silver grain.
2. Possibility of sensitizing for almost every wave length without the use of light filters to exclude rays of short wave length.
3. Sensitiveness, including the usually very pronounced minima at λ=4,900 to 5,300 A. U.
4. Collodion emulsion sensitized with pinacyanol or dicyanin will record lines up to λ=8,015 A. U.

A great point in favor of collodion emulsion is the excellent definition of the lines, which permit of considerable amplification without showing the silver particles, and this is important with instruments with limited dispersion—so frequently employed for measurements—where critical accuracy is not called for. The color sentizers recommended by Klein are the fluoresceins, pinachrome, pinacyanol, pinaverdol, dicyanin, homocol, *iso*-ol, and ortho hrome.

The Collodio-Albumen Process combines many of the best points of albumen and collodion films. Many modifications have been published, one of the simplified processes being as follows: The collodion should be old, and the plate washed well after being collodion coated, until apparently all traces of solvent has been removed. After draining, the collodion is coated with iodized albumen prepared by adding 2 drams water containing 40 minims glacial acetic acid to 12 oz. fresh egg albumen, which is filtered, neutralized with ammonia, and iodized with potassium iodide 70 gr., ammonium iodide 15 gr., in water 1 oz. The sensitizing bath consists of silver nitrate 50 gr., glacial acetic acid 45 minims to 1 oz. water. The dry plates are allowed to remain in the bath between forty and sixty seconds, depending on the temperature of the atmosphere. After removal from the

bath they are thoroughly washed, the plate flooded with a 0.3% solution gallic acid, then allowed to dry. Plates so prepared are said to keep good for years. Photographs obtained from such plates have a very clear definition, finely grained surface, and on account of the long time of exposure, overexposure can readily be corrected in the development.[1]

Silver Phosphate Emulsions. According to E. Valenta[2] this is best prepared by diluting 1500 cc. 4% collodion with 250–300 cc. ether, mixing in 25–30 gm. phosphoric acid (sp.gr. 1.265) and 50–60 gm. citric acid previously dissolved in 100 cc. alcohol; 70–75 gm. silver nitrate is dissolved in 75 cc. water and 150 cc. alcohol added, and the two solutions combined in a yellow light. To neutralize the free nitric acid liberated, 4–8 gm., finely powdered lithium carbonate is added in small portions, continuing the addition as long as carbon dioxide is liberated. Finally 20 cc. of a liquid containing equal parts of glycerol and alcohol is added and the whole filtered through cotton. The emulsion is applied to paper as described under "Collodio-chloride Process" and is said to be three to four times as sensitive to light as ordinary collodion paper. From strong negatives it gives prints ranging in color from sepia to black without toning; or it may be toned after washing in the regular gold or platinum baths. In a subsequent communication[3] Valenta advises replacing a portion of the silver nitrate by ammonio-silver nitrate, claiming that the brilliancy observed in collodio-chloride emulsions by the addition of ammonium nitrate is equally apparent in phosphate emulsions. The emulsion is prepared by mixing 1,500 cc. highly viscous collodion of 3–3.5% strength with an alcoholic solution of 60 gm. citric acid and 20 cc. of a 20% phosphoric acid solution. To 60–80 gm. powdered silver nitrate, conc. ammonium hydroxide is added, until the precipitate first formed just redissolves. This is warmed and mixed with 250 cc. absolute alcohol. This ammonio-silver nitrate solution is introduced in small quantities at a time, with agitation, to the first solution. Finally 250 cc. ether is mixed with the liquid, which is then filtered through cotton and eventually 10 cc. each glycerol and alcohol added. Tartaric or oxalic acid cannot satisfactorily replace the citric acid.

Reproduction of Images on Glass, Ceramic, or other Surfaces by Collodion. According to M. Anthés and E. Lloyd Ltd.,[4] the

1. Brit. Jour. Almanac, 1876, 164. Collodion giving a "porous" film is recommended. To make ordinary collodion "porous" add a small quantity water or a small amount of sodium carbonate, after which the pyroxylin solution is filtered.
2. Phot. Corr., 1900, **37**, 313, 449; Jour. of Phot., **47**, 325.
3. Jahrsb. Phot., 1906, 150.
4. E.P. 24214, 1907; abst. J.S.C.I., 1908, **27**, 592.

sensitizing solution consists of ammonium or sodium bichromate, 2 gm., and a soluble carbohydrate, 4 gm., dissolved in 5 cc. of water, mixed with nitrocellulose, 2 gm., dissolved in ether or acetone, 50 cc., and alcohol, 150 cc. The solution is applied to the surface to be provided with an image, dried, and exposed to light under the design, after which a suitable pigment is dusted on the warmed surface, and the image is developed by washing with water, and finally fixed on the surface by firing. The process may be applied to the reproduction of images on wood or other surfaces when firing cannot be resorted to; porous surfaces are enameled previous to sensitizing. A permanent model for the design, on glass, may be produced by the above process from which any number of reproductions can be made.

Subsequently [1] it was found that more even films can be obtained by omitting the water, and using a volatile solvent or solvents for the bichromate and the carbohydrate which are miscible with the nitrocellulose solution. Thus the sensitizing solution consists of a bichromate of lithium, calcium, strontium, ammonium, sodium, potassium, copper, or iron, with a carbohydrate or glycerol, a solvent, which may consist of a mixture of ethyl alcohol or wood spirit with ether or ethyl acetate, and a nitrocellulose soluble in the solvent used. The bichromates may be replaced by polychromates or chromic acid; in the latter case, a difficultly oxidizable hygroscopic substance, such as glycerol, is used in place of a carbohydrate.

They also discovered [2] that images which will withstand washing are obtained on ground glass or similar rough surface by means of a sensitizing solution containing invert sugar, honey, or other carbohydrate, a bichromate, and a volatile solvent for the bichromate and carbohydrate. Suitable solvents are ethyl alcohol, wood spirit, acetone, ether, and ethyl acetate. Glycerol may be used in place of a carbohydrate, in which case acetic acid is used as solvent, and chromic acid as sensitizer. Bichromates of lithium, potassium, ammonium, strontium, calcium, copper, or iron may be used, as also may polychromates. The following is an example of such a sensitizing solution: Lithium bichromate, 2 gm.; honey, invert sugar, or other carbohydrate, 4 gm.; ethyl alcohol or wood spirit, 100 cc.

In the manufacture of metallized papers and films [3] a mixture is made composed of 3 parts of powdered metal, e.g., aluminum, 100 parts of collodion, containing about 3% of nitrocellulose, and 2–3 parts of glycerol or castor or other vegetable oil. This emulsion is

1. A. Ling, T. Rendle and E. Colbrook, E.P. 17433, 1908. Six examples of sensitizing solutions are given.
2. A. Ling, T. Rendle and E. Colbrook, E.P. 17432, 1908.
3. J. and G. Galay, E.P., 1715, 1909.

contained in a trough and the paper to be proofed is drawn through it and then dried. Films are made by pouring the emulsion on a polished plate and evaporating the solvent.[1]

Line Production and Half-Tone Work. Collodion is not adapted for fine line-work on account of a tendency to spread and blur due to refrangibility of light in the film and no corresponding reflection from the glass surface. In ordinary line work, however, collodion is applicable, preferably in the unsensitized form. In process work (line negatives) and half-tone work[2] (screen negatives), the conditions are nearly opposite to those which exist in the preparation of ordinary continuous tone negatives, opals or transparencies. Whereas in process work the negatives comprise two tones only, i.e., absolute transparency and entire opacity, in line negatives, gradations between these two extremes are sought for, the absolute transparency being the clear glass, the spaces between the lines being of most pronounced opacity. Of the various satisfactory methods which have been developed for ordinary line work reproduction, all require, in addition to the silver bath, iron developer and potassium cyanide fixing solution,[3] a redeveloping solution[4] and an iodine solution.[5]

1. Meister, Lucius & Brüning (E.P., 6769, 1897) coat leather with a sensitive photographic film by placing the leather on a frame and saturating both sides with a 1% solution of collodion. After twenty-four hours a film of sensitized gelatin is applied over the collodion, the latter protecting the silver salts in the emulsion, and the gold salts in the toning solution, from the reducing action of the leather.

2. The name "half-tone" is in some respects misleading, in that there is no gradation or half-tones in the negatives, the image being composed of opaque dots in a transparent field. The half-tone effect produced is due to the variation in size of the dots which compose the image. It follows, therefore, that a line negative is essentially the same as a half-tone negative in character, the difference being in the method of production only. Therefore so far as the chemical procedure in the coating and treatment of the film is concerned, those processes which are satisfactory in producing line negatives should be equally applicable in half-tone work.

3. A collodion emulsion image differs from that obtained in the wet collodion process, in that the latter is formed *on* the film, and not *in* it. The image-forming silver comes from the reduction of the silver halide, usually the bromide, which the developer reduces. This appears intensified by slight underexposure, addition of yellow stain to the emulsion as ammonium picrate, tartrazine or thiazol yellow. The plate may be backed by attaching a black paper to the back of the plate by means of an adhesive composition, 20% glycerol in equal parts of alcohol and water having been recommended. According to Amstutz ("Handbook of Photo-engraving," 127) for line work or half-tone negatives in which contrast is desired, the most acceptable combination is alcohol 6 oz., ether 10 oz., pyroxylin 80 gr., ammonium iodide 30 gr., cadmium iodide 50 gr., and calcium chloride 10 gr. For regular half-tone work is recommended alcohol, ether and pyroxylin as above, ammonium iodide 48 gr., cadmium iodide 24 gr., cadmium bromide 16 gr.

4. A. Payne ("The Wet Collodion Process," p. 74) recommends pyrogallol 10 gr., citric acid 25 gr., dissolved in distilled water 2 fl. oz. And (Solution No. 2) silver nitrate 10 gr. per ounce of distilled water. Both solutions are said to keep well.

5. A 1% solution of iodine in water and containing 4% potassium iodide has been found the satisfactory strength. The iodine and iodide are triturated

The copy is fixed on the easel and carefully focused in the camera in the usual manner, vibration and stopping down of the lens being guarded against, the copy powerfully and evenly illuminated, the substratumed glass coated with iodized collodion and sensitized in the silver bath as previously described.[1] After exposure the plate is developed in the iron developer just described, care being taken to stop the development as soon as a haze appears over the fine lines, the plate being immediately thoroughly rinsed and fixed with the cyanide solution.[2] Great care must be taken not to overexpose. The negative may be intensified with a 3% solution of potassium bromide, containing 2% crystallized copper sulphate and slightly acidified with nitric acid. When the plate has been fixed, it is well washed [3] and then darkened by flowing over a 3% solution of silver nitrate in water. After the final rinsing, the plate may be varnished as previously described.

together in a mortar with a small portion of the water until solution is complete. The solution should be decanted, not filtered, into the stock bottle and preserved in the dark. The copper bromide solution may be prepared by bringing together a soluble copper salt and bromide in equimolecular proportions and filtering off the cupric bromide precipitated, but it is best to purchase the dry cupric bromide, the stock solution being formed by dissolving 1 part of the salt to 20 parts of water. The solution should be carefully filtered before use. The silver solution which follows the copper bromide treatment is an 8% solution of silver nitrate in water, acidified slightly with nitric acid. A light-flow collodion which has been previously clarified by filtration has been found most satisfactory.

1. The silver bath should be distinctly acid in order to produce a clear plate with no silver reduction other than that produced by the action of the light. After removing the sensitized plate from the silver bath, it should be examined by non-actinic light, both transmitted or reflected, for the presence of flaws, after which it is put in the dark slide and is ready for exposure in the camera.

2. After exposure, the plate is developed with the ferrous sulphate developer already given, the development being stopped as soon as a haze is apparent over the finer lines, the image being then washed and fixed with cyanide in the usual manner. The bluish color which is formed is caused by a combination of the iron and cyanide, resulting in the formation of ferrocyanide. Overexposure results in hazy, veiled lines, and if the veil or deposit is not removed by the reducer it is better to take a new negative rather than endeavor to obtain a good result with the one in hand, remembering to reduce the time of exposure. On the other hand a weak image but with clear lines indicates underexposure. In order to obviate the possibility of a deposit forming on the image, it is considered good procedure to reduce each line negative to dissolve any veil that may have formed, but which would become evident upon intensification. A satisfactory "cutting solution" may be prepared by carefully discharging the dark color from a dilute iodine solution by oxidation with potassium cyanide. This solution is flowed over the image until the lines assume a clear-cut bright appearance, the plate being then immediately well washed in water. The reducer must be spread over the entire surface of the plate and not poured continuously on one spot, or uneven dissolving of the image will occur.

3. After a short rinsing, in which the water should not be allowed to run on one spot on the plate, the silver nitrate solution is applied. Occasionally the plate does not darken on the application of silver, the reason apparently being connected with the amount of copper bromide remaining on the plate. The washing should probably cease as soon as the copper bromide is all removed, but this point cannot be accurately determined. The darkening of the image should be continued until it appears black clear through to the plate, then thoroughly washed.

The method of formation of half-tone negatives does not differ much from the foregoing, the advantage of collodion emulsion being its isochromatic qualities, enabling the reproduction of more intricate objects, as red lettering on a black background, in which instance the wet collodion plate process is practically valueless. However, the character of an isolated half-tone dot from collodion emulsion plates does not differ essentially from that of a wet plate after proper intensification and reduction.[1] [2] After the plate has been prepared, exposed and developed as previously explained, it is washed and fixed with potassium cyanide solution, and the dots examined microscopically.[3] If unsatisfactory the plate is rejected and another exposure made. If satisfactory the plate is washed and intensified in the copper bromide and silver solution previously given. The plate may, if necessary, be redeveloped with pyrogallol and silver, the value of which is questionable. After washing, the plate is darkened by precipitating the silver thereon as silver sulphide with 1–2% aqueous solution of sodium or potassium sulphides, well washed and dried.[4]

1. Spreading of the light in the film necessitates a less screen distance, smaller stops, and more exposure on white paper ("flashing").

2. In order to obviate difficulties caused by deposition of moisture on the screen, the studio should be several degrees warmer than the dark room, so that the half-tone screen will be a degree or two warmer than the wet plate.

3. The time of development should vary between one-half and one and one-half minutes, no accelerator or restrainer being used. Where large plates are to be exposed, the emulsion should be kept cool on account of the fact that the color-sensitized emulsion should be kept below 10–12°. The plate should be carefully protected from light, even excess of dark-room exposure.

4. Collodion emulsion negatives may be intensified either by "physical" or "chemical" means. Von Hübl in his work on collodion emulsion, says: "Collodion emulsion plates may be intensified by physical methods, and whenever possible such methods should be made use of. The chemical intensifier increases the density of the whole negative, but physical intensification deposits considerably more silver in the high lights, increases the brilliancy of the negative, without injuring the fine details. For physical intensification, mixtures of silver nitrate with reducing substances, such as metol, hydroquinone, and pyro are used, and the addition of an acid (acetic, citric, sulphuric) retard the reduction, so as to conveniently control its effect. If a negative is flowed with such a solution, metallic silver in a fine state of division is deposited onto the silver particles of the picture.

The best results in collodion emulsion are obtained with the following metol intensifier:

A. Metol	$3\frac{1}{2}$ drams.
Citric acid	$2\frac{1}{2}$ drams.
Water	40 oz.
B. Silver nitrate	$\frac{1}{2}$ oz.
Water	50 oz.

The negative is well rinsed after the fixing, to remove every trace of hypo. A small quantity of "A" solution is poured over the plate to remove the traces of water. One volume of "A" solution is then mixed with $\frac{1}{10}$ volume of "B" solution, and the negative intensified in the usual way. It is remarkable that negatives take intensification better if they have been dried after fixing and washing than if intensified before drying.

A collodion emulsion that will give a sharp half-tone dot, will, upon the addition of certain synthetic dyestuffs, even with comparatively large apertures,

Collodion in the Manufacture of Balloons. For this purpose a solution of collodion not too thick is poured into a flask of suitable dimensions, which is rotated to spread the liquid about uniformly, and then inverted to allow the excess to run out. The ether is now evaporated from the film which adheres to the glass by blowing into the flask with a pair of bellows, whereby the collodion is left as a thin membrane on the surface of the glass. To withdraw it, the edges of the film are removed from the glass, a glass tube of suitable diameter is introduced into the neck of the flask, so that the balloon may adhere to it and the air is slowly drawn out with the mouth. The balloon then detaches itself from the vessel, contracts, and is easily

show those same dots in an indistinct, blurred appearance, the degree of indistinctness varying in intensity with different dyestuffs. Of the various theories which have been advanced to account for this, O. Klein's appears most reasonable. He believes ("Collodion Emulsion," 1905, 59) the cause "to be due to an evaporation of the water during the somewhat long exposure, which excites vibrations of the atmosphere in immediate vicinity of the image, and causes a blurring of the minute dots. This is confirmed by the facts that an unwashed plate presenting an alcoholic surface gives sharper dots than a washed one, that a collodion emulsion made with solvents containing a high percentage of water shows the same defect, and finally that plates which are exposed in cold rooms are freer from it than plates exposed at high temperatures."

According to von Hübl (Brit. Jour. Phot., 1904, **51**, No. 2281, p. 66) the collodion emulsions generally used for process work are, as a rule, sensitized by means of silver salts which increase the color-sensitizing action of any dyestuff. The silver salts of the eosin group of dyestuffs have been employed for this purpose, either alone or in ammoniacal solution. Emulsions prepared in this way have, however, low sensitiveness. Another method consists in treating the plate with a solution of the dyestuff, and, just before exposure, immersing it in a dilute silver nitrate solution. These methods, however, all produce plates which have a tendency to fog, on account of the presence of soluble silver compounds. The author points out that a dyestuff can only sensitize when it stains the silver bromide of the emulsion, and circumstances which increase or reduce the staining power of the dyestuff will raise or lower the color-sensitizing action. Soluble bromides reduce and finally destroy the staining power of dyestuffs, and consequently are to be avoided, but soluble chlorides have no harmful effects in this direction, therefore it appears that an emulsion containing silver chloride and silver bromide, and made with a slight excess of chloride, will give satisfactory results. In presence of ammonia, fine-grained bromide emulsions are easily obtained; but in presence of acids, coarse-grained silver bromide is formed. The following method of preparation was found to give an emulsion of very fine grain and fairly sensitive, containing excess of soluble chloride: A solution of 50 gm. of silver nitrate in 50 cc. of ammonia solution (sp.gr. 0.91) to which 100 cc. of 95% alcohol has been added, is mixed in the dark with 700 cc. of a 4% solution of "celloidin-collodion" in ether-alcohol (1 : 2). To this is added gradually a solution of 27 gm. of ammonium bromide in 40 cc. of water to which is added 100 cc. of a lithium chloride solution, made by dissolving 10 gm. of lithium chloride in 10 cc. of water, adding 90 cc. of alcohol and filtering. The emulsion is agitated thoroughly and allowed to stand for two or three hours, when it is precipitated by the gradual addition of 300 cc. of water, with constant agitation, poured into 3 l. of water, and, when settled, washed by decantation, dried as far as possible, and dissolved in a mixture of 350–450 cc. of alcohol and 400–550 cc. of ether. The emulsion is about twice as sensitive as a wet collodion plate, and gives gradation similar to that obtained on platinotype paper. Addition of a soluble silver salt does not increase its sensitiveness. Addition of a chromate gives increased contrasts, but reduced sensitiveness. Staining with eosin, however, has the same effect on the contrasts without affecting the speed of the emulsion.

withdrawn through the neck. It must be immediately blown out and tied to the neck, so that it may dry in the distended state. Small and thin balloons do not diminish much in volume as they dry, but larger ones contract strongly. This contraction, however, may be prevented by drying the balloon in dry air which is warm. Collodion balloons may be made much lighter than those of goldbeaters' skin, so that much smaller ones will rise in the air, when filled with detonating gas (2 vol. H, 1 vol. O). They may be made so thin that a balloon containing 100 cc. will weigh only 0.03 gm. when empty, and 0.04 gm. when filled with hydrogen. Now the weight of an equal volume of air being 0.13 gm., consequently such a balloon will rise rapidly in the air. Hydrogen diffuses quickly though their pores. Collodion balloons become strongly electric through strong friction. When very thin they exhibit beautiful interference color. In order to decrease adhesion of the film to the interior of the flask, the latter may be rinsed out with 5% castor oil in alcohol, the oil forming a pellicle on the interior glass surface, to which the pyroxylin will not strongly adhere. These balloons usually appear in commerce 6, 12 and 16 in. high.[1]

Inflammability of Photographic Films. Valuable data as to the inflammability and decomposition products of pyroxylin photographic films have been collected by C. Hall and W. Snelling[2] as the result of an investigation of an explosion which occurred at the Ferguson Building, Pittsburg, Feb. 27, 1909,[3] where 170,000 gm. films in a vault ignited, then exploded, wrecking the building and injuring 50 persons.[4] As the result of heat tests made, at 150° decomposition resulted in 246 seconds; at 155° in 145 seconds; and at 160° in 103 seconds. Portions of the films were decomposed in closed vessels of sufficient strength to retain the gases and gave:

	A (*in vacuo*)	B (*in pleno*)
Water soluble	3.7%	.7%
Nitrogen dioxide (N_2O_2)	28.5%	.....
Carbon dioxide	7.3%	7.7%
Carbon monoxide	26.3%	41.2%
Hydrocarbons	.7%	3.1%
Nitrogen	31.5%	26.3%
Oxygen	....	2.1%
Hydrogen	.....	18.9%

1. See Soc. Michelin et Cie., E.P. 13898, 1910.
2. The Nickelodeon, 1910, **3**, 47, 67; Engineering News, 1910, **62**, 365.
3. See Chem. Abst., 1910, **4**, 383.
4. An employee entered the vault with an extension electric light, which in some manner ignited a reel of film. The employee threw the ignited reel out of the vault into a room containing other films, slammed the vault door shut, when an explosion soon followed.

Mixture "B" was found to readily form explosive mixtures with 1–5 volumes of air. It was established that the type of decomposition of film of maximum danger and explosive gas mixture can only be obtained under confinement at high pressure.

The following suggestions, made by them, have particular reference to the danger of storage of photographic films and similar pyroxylin products in public buildings. The use of an unprotected electric light bulb in vaults used for film storage is inadvisable. As the decomposition of film that produces the most dangerous and explosive gases can only be brought about under conditions of high pressure, and as the latter could not be produced in a vault with an adequate outlet,[1] it is recommended that every film storage vault be provided with an outlet pipe of at least 2 sq.cm. for each k. film to be stored therein, the pipe being so placed as to prevent access of sparks to the interior of the vault. Attention is called to the fact that the burning of pyroxylin is very different in its nature from the burning of wood or other combustible substances in that fire from wood may be readily extinguished by cutting off the supply of air, whereas pyroxylin fires cannot be extinguished by shutting off the air supply, since considerable oxygen is held chemically combined in the film, and this oxygen serves to continue combustion after all excess of air has been stopped. Steam or hot-water heating coils should not be permitted within the vault. For determination of stability of pyroxylin films and plastics, see Chapter XIV.

Photographic Lacquers and Pyroxylin Formulas. *Trichrome Collodion Emulsion* (non-filter). For use without light filters. Mix sodium sulphite 10 oz., potassium carbonate in distilled water 20 oz., hydroquinon 1 oz., in water 4 oz.; ammonium bromide 1 oz., in water 4 oz.

Collodion Transfer Emulsion. "A." Pyroxylin 50 gr., alcohol 4 oz., ether 4 oz., dissolve. "B." Silver nitrate 240 gr., water ½ oz. "C." Strontium chloride 60 gr., alcohol 2 oz. "D." Citric acid 60 gr., alcohol 2 oz. Take 2 oz. "A;" add 30 drops "B" in 1 dram alcohol and shake. Add 1 dram "C." in small portions, shaking. Add 30 drops "D." shake well and filter. Prepare in dark room.

Large Plate Collodion. Ordinary collodion is thinned with 2 parts ether and 1 part alcohol before iodizing.

Ferrotype Collodion (Eder). Pyroxylin 6–8 gm., alcohol 240 cc., ether 240 cc. When dissolved add ammonium iodide 4 gm., cadmium bromide and iodide, each 2 gm. as iodizer.

1. See "Fireproof Magazine for Cinematograph Films," A. Nolan, U.S.P. 921273, 1910.

Dawson's Collodion Emulsion. Pyroxylin 8 gm., cadmium bromide 7 gm., ammonium bromide 2 gm., ether (0.725), alcohol (0.810) of each 120 cc.

Collodion Emulsion Varnish. Acacia, 4 gm., water 40 cc., phenol, 0.1 cc.

Line Plain Collodion. Pyroxylin 7–9 gm., alcohol 135 cc., ether 325 cc. Allow to stand three to four days. Decant.

Half-tone Iodized Collodion. Pyroxylin 12.5 gm., ether 335 cc., alcohol 275 cc., iodizer 55 cc. Iodizer composed of cadmium iodide 43 gm., ammonium iodide 29.5 gm., strontium chloride 8 gm., calcium chloride 8 gm., alcohol 600 cc.

Collodion Emulsion Preservative. Tannin 35 gm., gallic acid 13 gm., glucose 13 gm., conc. acetic acid, 300 cc.

Flexible Collodion Varnish. See Collodion Flexile, U.S.P.

Glossy Paper Emulsion. "A." 4% pyroxylin in alcohol 1, ether 3, 620 cc., ether 100 cc., alcohol 30 cc. "B." Silver nitrate 25 gm., water 25 cc., alcohol 120 cc. "C." Calcium chloride 4 gm., water 4 cc., alcohol 5 cc. "D." Citric acid 5 gm., water 5 cc., alcohol 20 cc. "E." Castor oil 5 cc., alcohol 10 cc., glycerol 5 cc., alcohol 10 cc. "B," "C," "D" and "E" are added to "A," in above order with thorough shaking. Gives (Hanneke) paper especially suitable for separate toning baths.

Matt Paper Emulsion. "A." 4% collodion 600 cc., ether 140 cc., methyl alcohol 30 cc. "B." Silver nitrate 25 gm., water 28 cc., ethyl alcohol 100 cc. "C." Calcium chloride 4 gm., water 4 cc., alcohol 40 cc. "D." Citric acid 5 gm., water 5 cc., ethyl alcohol 50 cc. "E." Castor oil 4 cc., glycerol 4 cc., alcohol 16 cc. For use with a raw matt paper, i.e., Weber's matt baryta paper.

Enamel Collodion Glazing Process. Pyroxylin 3.3 gm., alcohol and ether each 120 cc. Clean glass plate with chalk and coat with above. As soon as set, slide the plate face up in water in which the print to be glazed is floating—face down.

Collodion for Double Transfer from Opal. Enamel collodion 1 oz., ether and alcohol each 1 oz. Flow over opal, allow to just set, wash in water and attach soaked tissue to it.

Lambertype (carbon with resplendent surface). Coat properly polished plate glass with pyroxylin 6.5 gm., ether 300 cc., alcohol 175 cc., castor oil 2 cc. Allow to set, wash thoroughly in cold water, soak, squeegee, strip and develop the tissue in the usual way. After washing, the final support is brought in contact with the print under water. The two are allowed to dry in the air, and when dry the collodion-supported image is detached from the glass, yielding a print with highly polished surface and transparent shadows.

Physical Testing of Collodion Films. In the use of cellulose nitrate films in photography, for lacquers, artificial filaments and as applications to leather in the formation of enamel and patent leathers, the constants of diameter, extensibility, tensile strength, freedom from specks, color and proportion of solvent present are of great importance

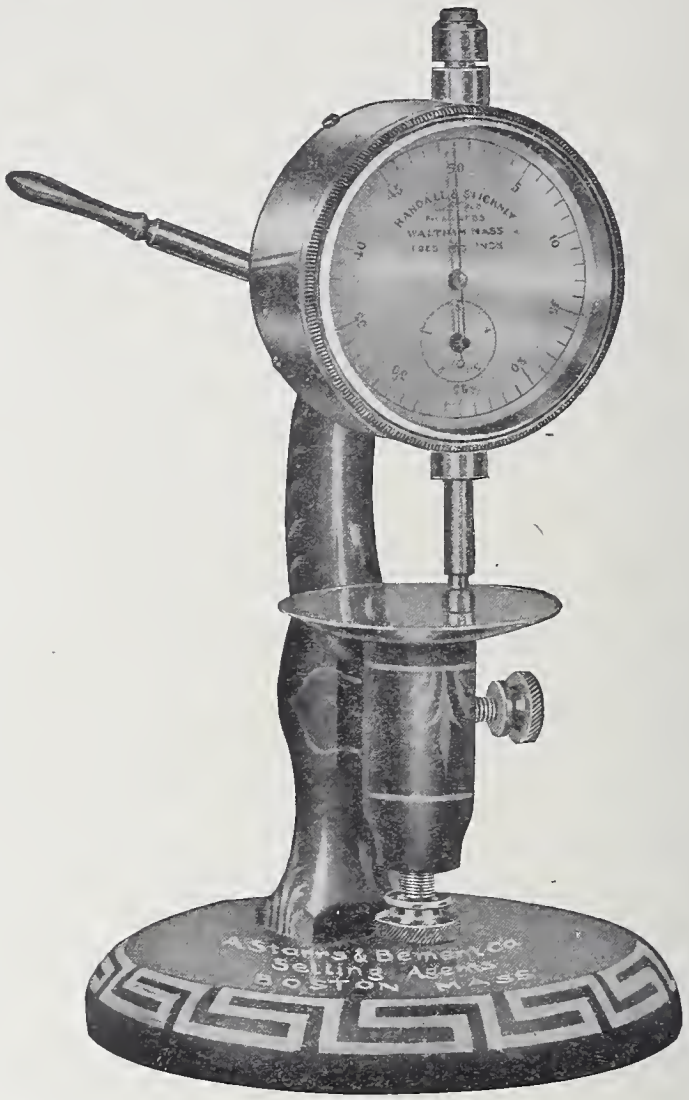

Fig. 276.—The Randall & Stickney Paper Gauge for Determining Film Thickness.

as factors upon which to base the suitability of a particular pyroxylin for a given purpose. It is only recently that the value of physical tests as criteria of the commercial applicability of a pyroxylin for a predetermined use, has, in the author's judgment, been accorded the prominence which it deserves.

Diameter and Uniformity of Thickness are of value in photographic films, especially in continuous films. The Randall & Stickney paper gauge shown in Fig. 276 is useful for this purpose, and consists of a bed-plate and hammer above, the film being interposed. The hammer is lifted clear of the plate by means of the lever shown to allow insertion of the film. The dial is graduated to thousandths of an inch, and determinations to one-five thousandth of an inch are readily made. By ruling off a film in cross-setions of a convenient diameter (say one inch square) and determining the thickness of a number of such squares, the uniformity of diameter as well as the absolute thickness is obtained. If the applicability of a certain pyroxylin solution is under examina-

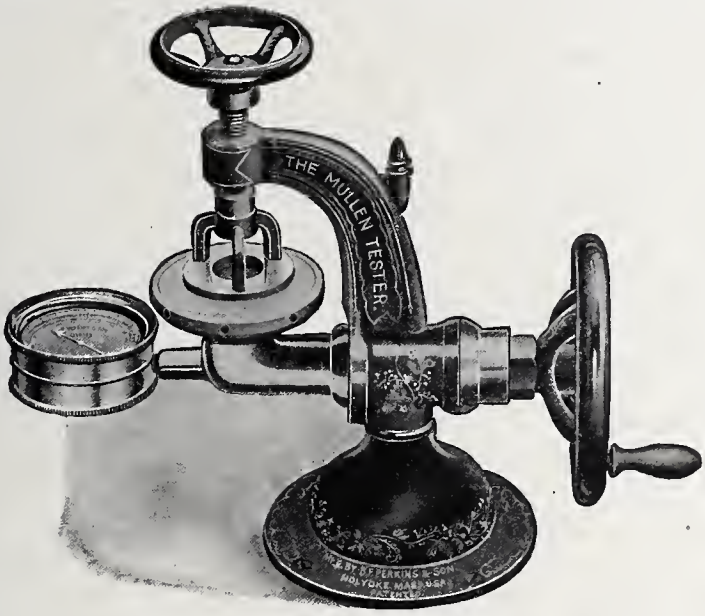

Fig. 277.—The Mullen Film Tester.

tion, a film is first formed from the solution as previously described, and when dry sections subjected to the various tests.

Tensile Strength [1] is of especial importance in pyroxylin intended to be subjected to great wear as when used for cloth and leather covering, and in cinematographic cameras. The Mullen Paper Tester, shown in Fig. 277, is perhaps the most satisfactory of the inexpensive devices, being simply a small hydraulic press with a Crosby Standard Pressure Gauge attached, for registering the pressure exerted to break the film. The film is clamped over one end of a cylinder filled with liquid, as glycerol, with a flexible and thin rubber diaphragm between

1. The statement frequently appears in the literature that cellulose nitrate made at a temperature as high as 60° is not suitable for the manufacture of artificial silk and films because the high temperature of formation decreases the strength of the pyroxylin. In the author's experience this is not so.

the film and liquid, arranged in such a manner as to require no pressure to actuate it, and serving only to keep the liquid from coming in contact with the film. By this method the liquid—which is the rupturing force—must conform perfectly to any irregularity in the film surface, or by reason of its being improperly clamped, and therefore the pressure will be uniformly exerted over the entire surface of the exposed film. By turning a hand wheel at the other end of the cylinder, pressure is brought to bear on the gauge and film simultaneously, and through the same medium—the liquid.[1] When the film ruptures, the gauge hand remains stationary until next reset by a special attachment similar to that of a stopwatch, registering the number of pounds per square inch required to break the film.

Elongation and Recoil, often called the "stretch" and erroneously the "elasticity," is useful in determining the suitability of pyroxylin solutions as applications to skins and hides in the preparation of patent and enamel leather, where in forming the vamp of the shoe the leather is subjected to considerable stretching. There is a wide variation in extensibility, i.e., the ability of certain cellulose nitrates to stretch to maximum without breaking, and then return partially to original length. A film is cut to a strip 1 in. wide and 12 in. long, and fastened on a graduated board. A weight is attached to the end of the strip, 1 lb. for each thousandth in. in thickness having been found convenient. The weight is suspended by the film strip, and the elongation in five and ten hours noted. A 12×1 in. film, 0.005 in. in thickness, when thus suspended with a 5 av. lb. weight, will increase in length from 5-20% in ten hours, and upon release of the weight will retract in length about 30% of the elongation.

Freedom from Insoluble Particles is of interest, especially in photographic continuous films, the presence of which causes streaks and lines when subjected to the high magnification and projected upon a screen. The author is aware of no more satisfactory method of determining the suitability of a film for photographic purposes in so far as freedom from specks is concerned, than to place a portion of the original film, before being sensitized, in the camera and projecting it on a screen with high magnification. Paper filtration of pyroxylin solutions is no criterion of sufficient freedom from insoluble particles to be acceptable for photography or the formation of artificial filaments.

Color of films is best determined in a $\frac{1}{16}$ in. cell of a Lovibond Tintometer in the usual method of working with fluids.

1. There is little chance for variation caused by friction or lost motion, as in a tester where the force is transferred from the point where the paper is broken to an indicator by a more or less complicated system of levers and springs.

Seasoning. Great irregularity in the above tests will result in the use of films incompletely seasoned. It therefore becomes necessary in order to obtain comparable results, that the film be first subjected to thorough drying at 40–45°, before being tested. The above series of tests leave much to be desired in accuracy and control, but with the same instrument in the hands of the same manipulator for comparative tests—in the absence of more accurate methods—admit of considerable information being obtained by one familiar with the industries.

The Chemical Examination of Photographic Films is usually a comparatively simple procedure, where the sensitizing constituents are not to be determined. The following method in the author's hands has been found satisfactory for general work.

From 5–10 gm. of the finely cut film is soaked in 20 volumes of warm water over night, and next morning filtered through a tared Schleicher & Schuell extraction thimble, the residue washed with hot water and the thimble dried to constant weight. The difference between the original weight of sample, and water-insoluble residue is calculated as gelatin. The thimble is next Soxhlet extracted with petroleum ether or benzene, the distillate evaporated to dryness and weighed. If a continuous film is being examined the residue is usually a vegetable oil, as castor, added to impart flexibility to the film. The odor of camphor in the benzene-extract points to the presence of celluloid or similar pyroxylin plastic. If the film from a photographic plate is under examination, the presence of rubber used to edge the plate must be looked for in the benzene-extract. The benzene-insoluble residue in the fat thimble is probably pyroxylin, with or without cellulose acetate. Filtration of hot amyl acetate through the thimble dissolves cellulose nitrate and does not affect cellulose acetate, whereby a separation of these two may be made. The presence of gelatin in the " support " in the film may be determined qualitatively by placing a drop of nitric acid on the film, which coagulates and turns the gelatin yellow, while at the same time dissolving the cellulose nitrate.[1]

1. Aeeording to E. Valenta (Atelier phot., **16**, 3) photographie papers should consist ehiefly of best rag stoek, though most are prineipally purified cellulose; they must eontain praetically no metallic partieles, sinee these are the chief cause of spots. The author's method of testing faulty silver bromide paper is: (1) dot the baek with 5% aniline sulphate, when imperfeetly purified cellulose will turn the dots yellow; (2) expose under negatives, and an additional piece in strips, one to five seeonds, to a 16-c.p. lamp at 1 m.; these will show the general properties of the emulsion and the degree of spotting; (3) exposure of a piece to daylight will sometimes show violet spots, whieh are eaused by dust and turn yellow in fixing; (4) a piece fixed without exposure, treated with 5% aeetic acid, washed, dried, and treated with 5% potassium ferricyanide, will show iron particles in blue, eopper partieles in brown, and whether these are in the paper or the emulsion.

CHAPTER XVIII

GUNCOTTON SMOKELESS POWDERS AND THE EXPLOSIVE CELLULOSE NITRATES

It will be apparent that the material comprising the subject-matter of this chapter is incomplete as compared with the other sections of this work, the object being rather to record the more important of those facts in connection with the cellulose nitrates as concerned with smokeless powders and allied propellants which stand in close relation to those applications of the cellulose nitrates in the peaceful arts, and previously recorded.

Gunpowder. For centuries the only explosive known to the world was a mechanical mixture of approximately 75 parts saltpeter (potassium nitrate), 15 parts charcoal, and 10 parts sulphur, called gunpowder. The date of its discovery and name of the inventor is obscure, and immaterial in this connection, the fact of interest being that in the combustion of this explosive a large amount of solid matter is given off, which not only clogs the bore of the gun, but produces an opaque cloud enveloping the gun and gunner. With advancement in gunnery, the introduction of rifling, by which a higher velocity and greater accuracy of fire was obtained; the appearance of Colt, Hotchkiss and Maxim magazine rifles and machine guns with their automatic arrangements enabling an almost incredible rapidity of discharge; and the extension of rapid-fire large-caliber rifles, and the Gatling gun firing more than 1,200 rounds of small-arm ammunition a minute, made the problem of smoke produced one of great moment. Noble and Abel have calculated that military gunpowder evolves on combustion 57% by weight of ultimately solid matter, which is either thrown into the atmosphere as such or remains behind to foul the bore. Professor Charles E. Munroe[1] has drawn attention to the fact that a 110-ton gun can project at a single discharge 528 lb. of this solid product, from which it is evident that in a general

1 Presidential address "On the Development of Smokeless Powder," delivered before the Washington Section of the Am. Chem. Soc., Feb. 21, 1896; Jour. Am. Chem. Soc., 1896, **18**, 819–846, from which the above and other information has been taken.

engagement at the present time and with modern guns, the force or ship would soon be enveloped in a dense and opaque cloud and entirely at the mercy of an invisible (to them) foe, unless a stiff wind was blowing, or other atmospheric conditions favorable. In fact it is not too much to say that the science of modern rapid fire gunnery would undoubtedly never have reached the present-day perfection in rapidity of action, had not some product been evolved to supplant the smoke-producing gunpowder in military warfare.

Smokeless Powders. Probably the earliest experiments with smokeless powders was made by Howard in 1800, when he tested his newly discovered mercury fulminate, only to find that it produced little smoke with but slight recoil, but gave a low velocity to the projectile, burst the chamber piece and otherwise demonstrated its inferiority in competition with gunpowder. In 1806 Grindel carried out an extended series of experiments in endeavors to substitute ammonium nitrate for potassium nitrate in gunpowder mixtures, which were unsuccessful on account of inability at that time to overcome the deliquescence of the salt. He demonstrated the fact, however, that at the normal atmospheric temperature the products of its combustion are practically gaseous and invisible. It was used by Gaens in 1885 in his " Amide Powder " and extensively subsequently.

Cellulose Nitrate Smokeless Powders. The discovery by Schönbein of cellulose nitrates in 1846 and of glyceryl nitrates by Sobrere the year following, gave to the world two chemical curiosities which lay dormant for some years, chiefly through a lack of appreciation of the detail required in their manufacture and purification, and a wholesome respect for their power. Gradually and cautiously gunpowder was replaced by them for blasting purposes, in the earlier days being used singly, gunpowder by itself, and nitroglycerol, first alone and then combined with a kieselguhr absorbent, forming dynamite. Apparently the first attempt to use a nitrocellulose-containing propellant as a smokeless explosive was made by Lenk, who unsuccessfully tried to utilize guncotton in guns, in 1862. Three years later Captain E. Schultze of the German artillery, published a somewhat ambiguous pamphlet on his " new chemical gunpowder," more accurate details being obtained from contemporaneous German journals. Guttmann[1] describes the early manufacture of " nitroxylin " and " collodin " as prepared by F. Volkmann in 1872–1875. In 1882 W. Reid[2] patented the agglutination of nitrocellulose into grains, which were subsequently hardened by superficially colloiding by immersion in ether and alcohol. The next year O. Wolff and

1. " Twenty Years' Progress in Explosives," 1909, 38. 2. E.P. 619, 1882.

M. Forster [1] published their method of coating small guncotton grains with a solvent for the purpose of rendering them permanently moist. In 1885 Johnston and Borland disclosed a new idea in powder manufacture, in describing the preparation of their J. B. smokeless powder.[2] The next year, and precisely forty years after the discovery of guncotton, the French chemist Vieille produced his smokeless powder for military purposes, which may be said to be the first smokeless powder of the modern class, consisting of cellulose nitrates alone (Poudre B) or mixed with barium or potassium nitrates as oxidizers (Poudre BN). Both powders were thoroughly colloided by means of a solvent like ether-alcohol, whereby the grain was condensed and hardened to a horny, structureless mass.[3] Following Vieille by about two years [4] A. Noble combined both nitrocellulose and nitroglycerol to form ballistite, and the British Government followed the succeeding year with cordite. In the United States C. E. Munroe began his experiments on cellulose nitrate powders in 1889, culminating in the introduction of Indurite, and the adoption of a pure cellulose nitrate as the official powder of the United States Government.[5]

1. E.P. 3866, 1883.

2. They mixed nitrocotton with barium nitrate, producing the so-called "nitrated guncotton," usually adding either charcoal, torrified starch or similar carbonaceous powder. The material was placed in a drum, water admitted in the form of a spray, and after granulation the grains were dried, moistened with an alcoholic solution of camphor in benzine, the solvent being subsequently removed by evaporation. By this treatment the grains were hardened and their inflammability increased.

3. In the first powder of Vieille, picric acid was added, but soon abandoned in favor of Poudre B., named after General Boulanger.

4. E.P. 1471, 1888.

5. The present U. S. Service powder is so poor in oxygen that a grain burned in air leaves a large quantity of unconsumed carbon. Burned in a gun, however, and under service pressures, most of the C combines with O to produce CO instead of CO_2. The products of combustion therefore are nearly all gaseous and hence smokeless, consisting of CO, N and H. The immense volume of the products of combustion of such a powder, owing to the exceeding lightness of the gases evolved, gives it a high ballistic value, while at the same time the temperature is considerably lower and the erosive action less upon the gun than with a smokeless powder rich in nitroglycerol, which owes its higher ballistic value to the great expansive power due to high temperature. Comparing Cordite, as the nitrocellulose-nitroglycerol type of smokeless powder with a pure nitrocellulose propellant, it would require probably about a third more pyrocollodion powder to develop the same energy behind a projectile as that developed by Cordite containing 58% nitroglycerol (the original form). The United States and French smokeless powder costs more per pound, is inferior in ballistics per unit weight, gives a lower temperature of combustion and less erosive action, while nitrocellulose-nitroglycerol powders are less expensive, possess greater energy per unit weight, give a higher temperature of combustion upon firing, and this increased temperature naturally affects the rifling of the arm. The factor of solvent expulsion in nitrocellulose powders is greater than with propellants like Cordite, and in this respect the latter type have an advantage. In the U.S. pyrocollodion powder, the multiperforated grain and the composition necessarily go together, for it would be practically impossible to use such a hard and dense material and one which burns through such a small thickness without its being multiperforated. This is owing to the enormous initial areas presented to the flame with the resultant high pressures developed by full

For all practical purposes nitrocellulose smokeless powders may be divided into but two classes, i.e., those which consist of nitrocellulose only, as Troisdorf, Rifleite, B. Powder, Walsrode, Cooppal No. 2, Müllerite, the Russian powders, including the pyrocollodion powder of Mendeléeff used in the Russian navy, the Belgian powder of Wetteren, German flake powder, the Austrian Schwab powder, and the Service powders of the United States and France, and the nitrocellulose-nitroglycerol powders typified by cordite, and used by England and in more limited amounts by some other countries, as the Austrian gunpowder model 1893, composed of insoluble nitrocellulose and nitroglycerol. Some authors make a distinction in classification between those nitrocellulose powders which contain metallic nitrates, and in a less degree metallic chlorates, but the present tendency in explosive manufacture is toward simplicity, and the introduction of no more variables than is necessary. While a great step in advancement has been made in the change from smoky gunpowder to smokeless cellulose nitrate, yet another opportunity for distinct advancement is still open—the production of a flameless smokeless powder, so as not to disclose the position of the attacking force. On account of the high temperature of explosion of smokeless powder, considerable flame is ejected from the arm, due primarily to the fact that the solid particles expelled are heated to the point of incandescence. This is especially true of the nitroglycerol powders, which have a higher temperature of explosion than those composed entirely of nitrocellulose. C. Duttenhofer [1] proposes to partially overcome this by the addition of sodium bicarbonate to the powder, which upon losing its water of crystallization and carbon dioxide, has the effect of cooling the flame. A. Cocking [2] has patented the use of a combination of barium and potassium tartrates, while vaseline, vegetable oils and soaps have also been proposed for the same purposes, but the subject may properly be regarded at the present time as in the experimental stage.

As compared with gunpowder, modern cellulose nitrate explosives are characterized by greatly increased power, giving an enormously greater range, flatter trajectory and increased penetration to projectiles fired both from rifles and artillery, thus in connection with their smokelessness, altering the conditions and tactics of land and naval warfare.

charges, if granulated sufficiently fine or made thin enough to be burned in the gun without perforations. For able editorial advocating use of nitrocellulose-nitroglycerol powders see Engineering (Lon.), 1910, **89**, 649.

1. E.P. 19408, 1906; 791, 1907; F. P. 364413, 1906; and First Addition thereto dated Aug. 30, 1906; abst. J.S.C.I., 1906, **25**, 911. He gives nitrocellulose 75, nitroglycerol 25, vaseline 5, and sodium bicarbonate 2 (parts by weight) as a satisfactory propellant. In this connection see J. Taffanel, Z. ges. Schiess- und Sprengstoffw., 1910, **5**, 305, 333, 348, 372, 392.

2. E.P. 15564, 1905; U.S.P. 903958, 1908; abst. J.S.C.I., 1906, **25**, 497.

Manufacture of Pyrocollodion Smokeless Powder in the United States.[1] The United States and France have adopted as a powder for the army and navy, a cellulose nitrate of high purity and with no admixture of other ingredients except a small amount of stabilizer, in contradistinction to the official powder of England, which contains nitroglycerol in conjunction with nitrocellulose. This powder, which has a nitrogen content of 12.6–12.8%,[2] and an ether-alcohol solubility of 99–99.5%, is produced both by the government and by private firms under government supervision, for shoulder arms containing a small amount of graphite and for large caliber guns with no admixture of graphite.

The work of the Navy Department on smokeless powder[3] dates back to 1889, when C. E. Munroe produced Indurite, using nitrobenzene. In 1894 the nitrobenzene as a solvent was replaced by ethyl acetate and a small amount of camphor added as a deterrent. The next year Bernadou and Brown[4] began to blend various lots of nitrocotton to obtain a fixed percentage of nitrogen. Acetic ether was soon replaced by acetone, selected lots of cotton were taken with respect to their nitrogen content, and barium and potassium nitrates and a small amount of chalk added to increase the amount of oxygen and to act as an ant-acid. It was noted that while the corresponding French powders were very tough, the acetone powders were decidedly brittle. Acetone was then replaced by the present mixture of alcohol and ether with the result that a much tougher product resulted. The next steps

1. For latest Government practice, see Major Odus C. Horney on the "Manufacture of Smokeless Powder," Jour. U. S. Artil. 1910, **34**, (No. 105), pp. 140–151.

2. According to J. Strauss (Proc. U. S. Naval Inst., 1901, **27**, 733) in the original U. S. Navy smokeless powder it was specified that the nitrogen should closely approximate 12.44%, and that at least 98% should be soluble in ether-alcohol. After Mendeléeff demonstrated that a guncotton containing 12.44% N gave the maximum volume of gas, experiments at Indian Head showed that the nitrogen may be increased to as high as 12.8% without adversely affecting the velocity. G. Patterson showed that owing to the impossibility of expulsion of all the solvent, the nitrogen should never be as low as 12.44%. As in the smaller powder grains the residual solvent is seldom less than 0.5%, and nearly all alcohol. To provide for the oxidation of this, it is advisable to increase the nitrogen, the increase depending upon the amount of alcohol retained and hence the caliber of the powder or the number and size of the perforations, the residual solvent being a direct function of the powder wall thickness. However, the specifications as to solubility limits the maximum percentage of nitrogen introduced to about 12.80. Increase in nitration of smokeless powder increases its erosive power, and the increased degree of erosion is greater than can be compensated for by the decreased weight of the charge of the higher nitrated powder.

3. R. Henderson, Proc. U. S. Naval Inst., 1904, **30**, 353. A. Ames (Jour. U. S. Artil., Oct., 1904) describes the various stages in the development of U. S. smokeless powders.

4. See International Smokeless Powder & Chemical Co., E.P. 13457, 1903, in which highly nitrated (13.75% N) nitrocellulose is dissolved in acetone, while a lower nitrate (12.75% N) is dissolved in ether-alcohol. These are then mixed in proportions to produce a powder of any nitrogen content between the extremes.

were in the line of experimentation with nitrocellulose and methods for its purification, when it was found that a cellulose nitrate with as high as 12.8% N could be readily obtained. The Troisdorf powder, which had given excellent satisfaction, contained 12.5–13% N, and was a pure nitrocellulose powder. The barium and potassium nitrates were soon dropped as constituents on account of the smoke to which they gave rise. The question of nitrogen and stabilizers was then taken up as stated elsewhere.

At the Indian Head Station the Government produces nitrocellulose by centrifugal nitration, whereas at the Picatinny Arsenal, Dover, N. J., it is understood that the Thomson Displacement nitration process is used exclusively. All the private firms, so far as the author is aware, use the centrifugal method of nitration in producing nitrocellulose under government specifications. The process of manufacture is essentially comprised in the following steps:

(1) Nitration, purification and dehydration as described in Chapter III.

(2) Solvent displacement dehydration of the nitrocotton with ethyl alcohol.

(3) Colloiding the nitrocellulose.

(4) Removal of impurities in the colloid by hydraulic filtration.

(5) Formation of colloid into tubes and rods.

(6) Cutting the tubes into cylindroids of a definite length.

(7) Preliminary solvent recovery.

(8) Drying and sorting the finished product.

(9) Glazing.

(10) Blending.

Solvent Displacement Dehydration with Alcohol.[1] After the nitrated cellulose has been washed until the required stability has been attained, it is centrifugally dehydrated (see p. 124) dumped into a cart underneath (Fig. 29, p. 128) and weighed out into batches of such size that one batch will just fill the solvent hydraulic dehydrator. Usually 40 lb. batches are weighed out, and placed in separate zinc-lined wooden boxes with tightly fitting covers, each batch consisting roughly of 28 lb. nitrocotton and 12 lb. water. These boxes are usually placed in a small storehouse building, situated midway between the centrifugal house and the press room. With the proportion of water present in the nitrocotton, the boxes may be stored with perfect safety for several weeks before receiving further treatment, the covers fitting so tightly as to be practically air-tight, and hence admitting of but little drying from escape of moisture. Instead of centrifugal

1. For alcohol displacement see also F. G. du Pont, E.P. 15693, 1897.

dehydration, the "pyro" may be further pulped by passing through a "wet machine" (Fig. 278) from which the pulp issues from the

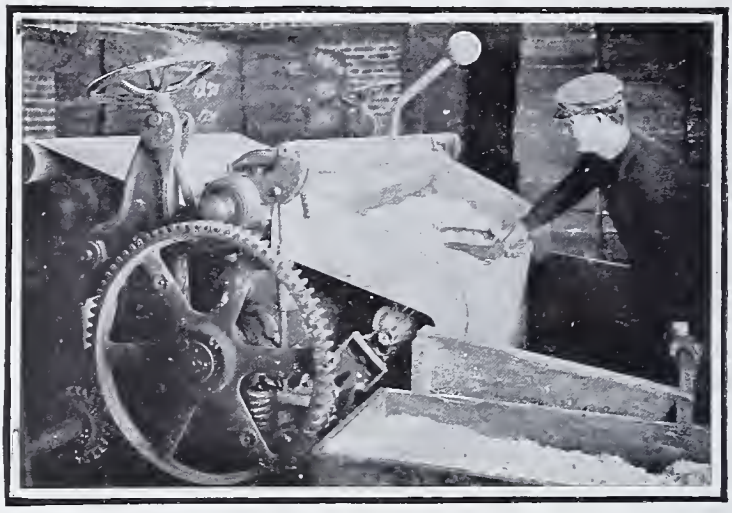

Fig. 278.—Running Pulped Nitrocellulose through the "Wet Machine."

rollers in a flake form, still containing from 35–40% water. It is not considered proper to expose the pyro to the dust and sun in open tubs

Fig. 279.—Exposing Nitrocellulose to Dust and Dirt in open Tubs.

as shown in Fig. 279. When the nitrocotton is to be "worked up" the contents of one box (28 lb. nitrocotton, 12 lb. water) is placed in a hydroextractor as described on p. 127, Fig. 30, p. 129 and Fig. 280

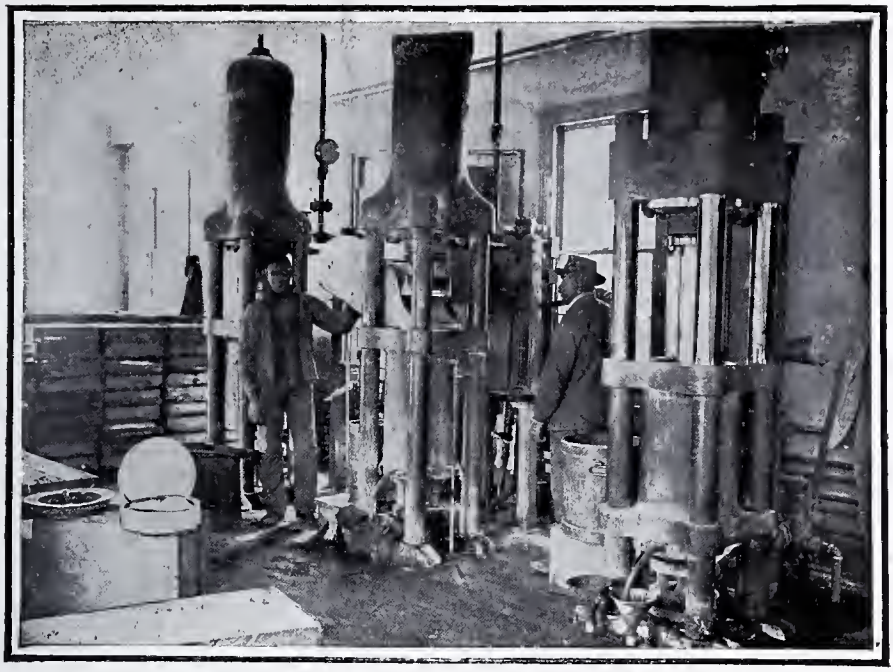

FIG. 280.—Pyroxylin Hydroextractor.

FIG. 281.—A Block or "Cheese" of Nitrocotton as taken from the Hydraulic Dehydration Press. Weight, about 40 lb.

herewith, about 35 lb. of 95% ethyl-alcohol run in [1] and the cover placed on the dehydrator. For several minutes no pressure is applied other than the weight of the descending alcohol. This gradually forces the water out on somewhat the same principle as the displacement process of nitration (p. 96) so that the first portion of fluid issuing from the press is nearly pure water. After about 6 lb. has passed through, the lower pressure (200 lb. per square inch) is applied, and finally the high pressure (3,500 lb. per square inch), the latter being continued as long as fluid is pressed out. The solid cylinder ("cheese" or "block" see Fig. 281), of nitrocotton formed is white, non-gelatinized and weighs about 38 lb., of which 10 lb. is alcohol [2] of about 88% strength. The block is broken up with wooden mallets or large bone knives after alcohol dehydration and placed in zinc-lined boxes holding two or three blocks, where they remain until they undergo the process of gelatinization or

Colloiding the Nitrocellulose.[3] Usually the mixers employed are of such size as to take three blocks, equivalent to 84 lb. dry nitrocotton. A machine of the type of the Lynn-Superior Company mixer shown in Fig. 282 may be used [4] as well as those shown in Fig. 60, p. 282. The blocks are mixed for about fifteen minutes before any ether is added in order to break the lumps up into a fine powder. On a basis of 65% ether to the weight of nitrocotton, [5] 48.4 lb. ether is weighed out in a milk can on scales placed alongside the mixer, the ether being usually

1. A separation of the aqueous layer from the layer higher in alcohol is usually made in the pereolate from alcohol dehydration, the first or lower alcohol-containing fraction being distilled in a different type of rectifying still from the latter portion of the pereolate which is concentrated in a long column still similar to that shown on p. 222, Fig. 37. One distillation will usually rectify the latter portion of the filtrate to 95% ethyl alcohol strength.

2. The amount of alcohol left in the nitrocotton block is purposely varied and is always the amount required in the subsequent gelatinization process. In pyrocollodion powders, the proportion of alcohol to ether required in the gelatinization process is 64–65% ether to 35–36% alcohol, and the weight of alcohol remaining in the block is calculated to this ratio of ether and the weight of dry nitrocotton. A smaller amount of alcohol is used in gelatinization the larger the caliber of the powder to be made, one reason being that the larger bulk of the individual grains of the larger caliber powders make it more advantageous to facilitate evaporation and final elimination of solvent by having present the minimum of higher boiling fluid (ethyl alcohol) as compared to the lower boiling and more volatile (ether).

3. For considerable information concerning the microscopy of partially gelatinized nitrocotton, see judgment of Sir F. Jeune, in Heidemann vs. Smokeless Powder Co., Ltd., Arms and Expl., 1898, 6, 130.

4. This type has two especially shaped mixing arms of crucible steel which revolve in opposite directions, passing up the sides and down the center of the bowl. The inside is formed smooth to facilitate cleaning, and a spout is provided in the front for discharging. The emptying of the bowl is accomplished by means of an automatic power dump, controlled by phosphor-bronze gears, and stops automatically without shock or jar. The bowl is water-jacketed, that the temperature of its contents may be kept low.

5. The 30 lb. alcohol present comprising the remaining 35% of fluid portion.

transported to the mixing house in pipes from the ether manufacturing building. Any stabilizer to be added is dissolved in the ether before the latter is poured into the mixer.[1] The ether is poured in the mixer in one portion, the cover fastened down, and the mixing continued for a further period of forty-five minutes. This is the most dangerous portion of the entire process, on account of the explos-

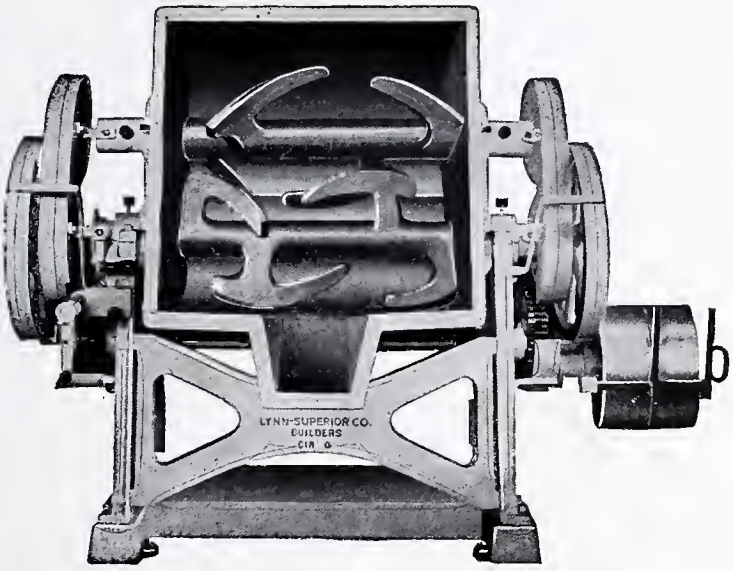

Fig. 282.—Mastodon Mixer for Colloiding Nitocellulose.

ibility of the ether vapor and the fact that it falls to the floor instead of rising and becoming dissipated.[2] Either rubbers or sewed raw-

1. The usual stabilizer is diphenylamine, the amount used for a charge of the above size being about 6 oz. This amount dissolves very quickly in the volume of ether taken. Rosaniline base has been used for the same purpose. C. Claessen recommends diethyldiphenylcarbamid (U.S.P. 909546, 1909), and ethylmethyldiphenylcarbamid (F.P. 410239, 1909) as stabilizers. In 0.30-cal. and similar small arm powders, graphite in about 0.7% amount (11 oz. per 100 lb. calculated on the dry nitrocotton) is added to the contents of the mixer before the ether is poured in, the object of the graphite being entirely mechanical, i.e., to facilitate loading

2. A. Cocking & Kynoch, Ltd. (E.P. 25081, 1905) have stated that in gelatinizing soluble nitrocellulose with ether-alcohol, the sheets or cords are very liable to curl up or become distorted on leaving the machine, owing to the rapid evaporation of the ether. The use of acetone and amyl acetate for insoluble nitrocellulose and nitroglycerol compounds is also attended with certain manufacturing difficulties, such as overheating during incorporation, in the case of acetone, and the difficulty of removing amyl acetate on drying, owing to its high boiling point. The invention consists in the use of suitable mixtures of acetone and alcohol as a solvent for nitrocellulose, the proportion of the two ingredients being chosen with regard to the degree of nitration of the nitrocellulose used. The manufacturing difficulties mentioned above are thus avoided. In the manufacture of Cordite Mark 1, a mixture of acetone (60%) and alcohol (40%) is used as the equivalent of 100% of acetone. Cordite M.D. can be gelatinized with acetone (70%) and alcohol (30%). The same proportions are also used for a guncotton containing 10% of soluble nitrocellulose, while a soluble nitrocellulose is gelatinized

hide slippers are worn by the workmen over their shoes, all hand trucks are rubber tired and the floor is either covered with lead or heavy linoleum. The nitrocotton having been completely gelatinized or converted into "colloid," the cover of the mechanical kneader is raised, and the contents [1] transferred into tin cans [2] with tightly fitting covers (Fig. 283), the next operation being [3] [4] [5]

with a mixed solvent containing acetone (40%) and alcohol (60%). It is thus possible, by the use of suitable mixtures of acetone and alcohol, to produce a complete solvent, or partial solvent, for any form of nitrocellulose

1. A light chocolate-colored moist-looking product which when squeezed by the hand compacts to a firm, structureless mass.

2. With a charge of 84 lb. nitrocotton, the colloid is usually transferred to two cans by means of the device shown at F, Fig. 291.

3. The Société anonyme d'Explosifs et de Prod. Chim. (F.P. 394992. 1907) claim the use of nitro-derivatives of the fatty series of the manufacture of smokeless powders with a base of nitrocellulose or of nitrocellulose and nitroglycerol. In particular mononitromethane (b. pt. 99°–100), may be used as the solvent in the preparation of powerful and very stable smokeless powders. When employed in admixture with nitroglycerol, these nitro-derivatives yield products of low freezing point. Thus nitroglycerol containing 10% of mononitromethane does not freeze at −15°. They may also be used in admixture with other substances (e.g., alcohol, ether, acetone) to effect the gelatinization of nitrocellulose.

4. In the mixing machine of G. Jones (U.S.P. 882114, 1908) the receptacle is provided with a mixer which, by means of a flexible connection passing over a wheel, is connected to a heavy piston so that, under ordinary conditions, it is raised above the mixing vessel. It can be lowered when necessary by applying fluid pressure to the piston, but it automatically returns to its former position when the pressure is released.

According to H. Auchu (U.S.P. 902464, 902465, 1908), the pan in which the explosive is mixed by means of rotating arms can be raised and lowered by means of a ratchet wheel connected to an eccentric. The pan and its contents are counterpoised by a set of weights. It is thus possible to move the pan very easily and without any jarring, it being raised and lowered by means of a hydraulic ram. H. Talley (U.S.P. 940216, 1909) has devised a machine of the ordinary type, for the manufacture of high explosives, with the exception that the mixing pan, in which the stirrer-blades work, can be held in position, or can be either lowered or raised, by hydraulic pressure.

5. In order to eliminate the cost of ether and the danger attendant upon its use. G. Gentieu (U.S.P. 806131, 1905; 832605, 837463, 1906) has patented a process of making smokeless powder, designed especially for ordnance powder. In the latter it is necessary to produce a powder with a high degree of elasticity and toughness so as to withstand the enormous pressure to which it is subjected in the powder-chamber during the firing of the charge. As the rate of burning or rapidity of explosion of the powder depends on the size of the powder grains and the consequent burning surface of the powder (see Figs. 300, 301), the powder for the various sizes of guns being made in grains or sticks of suitable size to retard the explosion somewhat and generate gas just fast enough to exert a gradually increasing pressure on the projectile and gradually overcome the inertia of the projectile to be thrown by that particular gun. If the grains or sticks of explosive are brittle or lack sufficient toughness and elasticity to withstand the pressure to which they are subjected during the explosion of the charge, they are broken up into fragments by the pressure, thus increasing the burning-surface, and consequently the rapidity of the explosion, which results in the transformation of the complete charge of powder into gas before the inertia of the projectile is overcome and a large enough chamber formed to accommodate the increased volume of gas and creates a pressure which the walls of the rifle are unable to withstand and bursts the gun or severely strains it.

He claims that by alcohol dehydrating of the nitrocotton in a centrifugal (see Fig. 27, p. 126. and G. Gentieu, U.S.P. 931749) and subsequent exposure of the product

FIG. 283.—Transferring the Colloided Pyrocollodion from Mechanical Mixer to Storage Cans.

FIG. 284. — Hydraulic Pyrocollodion Blocking Press (Waterbury Farrel Foundry & Machine Co.)

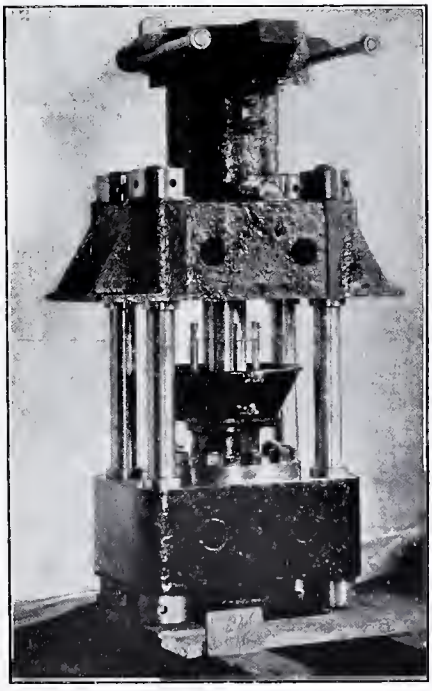

FIG. 285.—Macaroni Hydraulic Filtering Press, for Mixing and Straining Pyrocollodion.

FIG. 286.—Nitrocellulose Wash House. *A*, Wash Vats, where the Nitrocotton from Nitrating House is placed for the Preliminary Series of Washings with Steam. *B*, Truck, containing *C*, Nitrated Cotton. The Number of Separate Washings of the Nitrocotton is Shown by means of the Indicators Shown at *E*. *F*, Wooden Steam Vent Flues. The Tanks Shown are about 7 Feet Diameter, and 8 Feet Deep, extending to the Floor of the Story Underneath. (See also Fig. 287.)

FIG. 287.—Nitrocellulose Wash House.

Pressing the Colloid into a Solid Cylinder.[1] This is a step pre-

to the vapor of ether without introducing any ether in the liquid state, gelatinization occurs without disruption of the structure of the cotton filament, and powder produced from such gelatinized nitrocellulose when dried will be found much tougher and less brittle than that made by processes which involve stirring or compression. The process may be adjusted, the patentee claims, so that the original hollow

FIG. 288.—Hydraulic Filtering or "Macaroni" Press, for Removal of Solid Impurities from Colloided Nitrocellulose. *A*, Press; *B*, Filtered Colloid, in Strings as Issuing from the Press; *C*, Can, in which the Blocks *D*, of Colloid are Kept when not Passing through the Press. *E*, Top of Blocking Press, in which the Colloid Strings are Compacted again into a Solid Cylinder *D*.

cellular structure of the nitrocellulose has not been destroyed or noticeably impaired. In U.S.P. 837463, the finely divided nitrocellulose, containing from 15–40% of water, is agitated in a closed drum furnished with revolving arms. A solvent of nitrocellulose, soluble in, and with a lower boiling point than, water, is ejected into the drum at a pressure of 125 lb. to the sq.in. The nitrocellulose is thus gelatinized, and the solvent removed and recovered on drying the grains. In U.S.P. 832605, 1906, the nitrocellulose is first mixed with alcohol and then colloided by exposure to ether vapor. See also Gentieu and R. Waddell, U.S.P. 806131, 1905.

1. See "Pressing of Guncotton Blocks," G. Bell, E.P. 17415, 1903; 10663,

liminary to removal of the insoluble particles [1] by pressure filtration through an iron mesh sieve. The contents of one can of colloid—about 40 lb.—containing about 21 lb. dry nitrocotton—is packed in a hydraulic press, or block press, as it is usually termed, Fig. 284 showing the type constructed by the Waterbury Farrel Foundry & Machine Co. The top of the press is placed flush with the floor, and upon the application of the maximum pressure (3,500 lb. per square inch) no fluid is squeezed out of the colloid, the pressure resulting in the formation of a solid cylindrical cake, in appearance much like a gigantic grain of smoke-

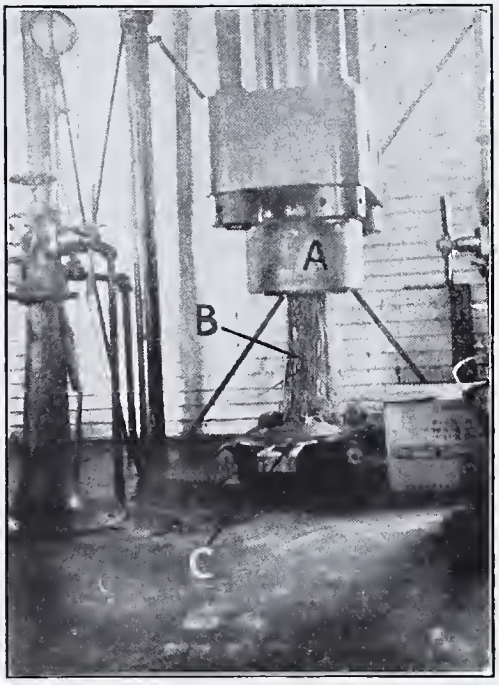

FIG. 289.—Macaroni Press (*A*) under Side, Showing *B*, Strings of Filtered Colloid, and *C*, Top of Hydraulic Press into which they are Packed, and Pressed into a Cylindrical Block again.

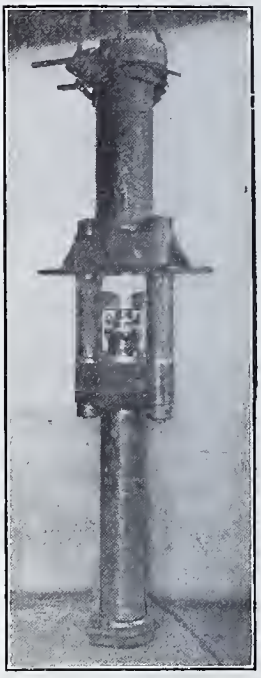

FIG. 290.—Hydraulic Pyrocollodion Blocking Press.

less powder. Whereas before pressure the colloided nitrocotton was white like finely comminuted cotton wet with water, after pressure it is translucent, horny in appearance and may readily be indented by pressure with the finger.[2] This solid cylinder is next placed in another but heavier hydraulic press shown in Figs. 288, 289, known as the

1904; U.S.P. 835296, 835297, 835298, 1906; abst. J.S.C.I., 1904, **23**, 882; 1905, **24**, 690.

1. Principally insoluble matter introduced in the several washings in neutralizing the nitrocellulose and particles of iron rust from water supply and other pipes.

2. *D*, Fig. 288, and *B*, Fig. 290 shows a block of colloided nitrocellulose as it leaves the press.

Macaroni Filtering Press. The object of this is to remove by straining any insoluble or extraneous particles and to render the colloid perfectly homogeneous. The lower portion of the piston chamber consists of a heavy steel block perforated with circular orifices of about $\frac{1}{16}$ in. diameter, with $\frac{3}{8}$ in. between centers. Upon this is laid a heavy 30-mesh iron gauze to intercept the smaller particles. Pressure being applied from above forces the colloid cake through the sieve and $\frac{1}{16}$-in. holes, and it issues from the press in a number of cylindrical rods of the diameter of the issuing orifices, resembling in

FIG. 291.—Smokeless Powder Manufacture. *A*, Kneading or Colloiding Mixer for Gelatinizing Nitrocellulose; *B*, Block of Colloid after having been Pressed into a Solid Cylinder; *C*, Block of Ungelatinized Nitrocellulose; *D*, Hydraulic Press for Transforming Loose Colloid from Mixer *A* into Cylinder *B*; *E*, Macaroni Filtering Press; *F*, Arrangement for Transferring Equally the Colloid from *A* to the Cans *G*. The floor is linoleum covered.

appearance macaroni, from which fact the mixing or straining press derives its name. The iron mesh filter sieve in the press is used but once, being cleaned by burning out the screens. A single screen is good for about 30 filtrations and subsequent purifications by burning.

Directly under the macaroni press, with its top flush with the floor, is a third hydraulic press, shown in Fig. 290, the function of which is merely to press into a cylindrical cake again the filtered colloid.

After this final pressure the blocks, each weighing about 40 lb., are placed in zinc-lined boxes with closely fitting covers, where they remain until forced into rods or ribbons. One set of valves, shown in Fig.

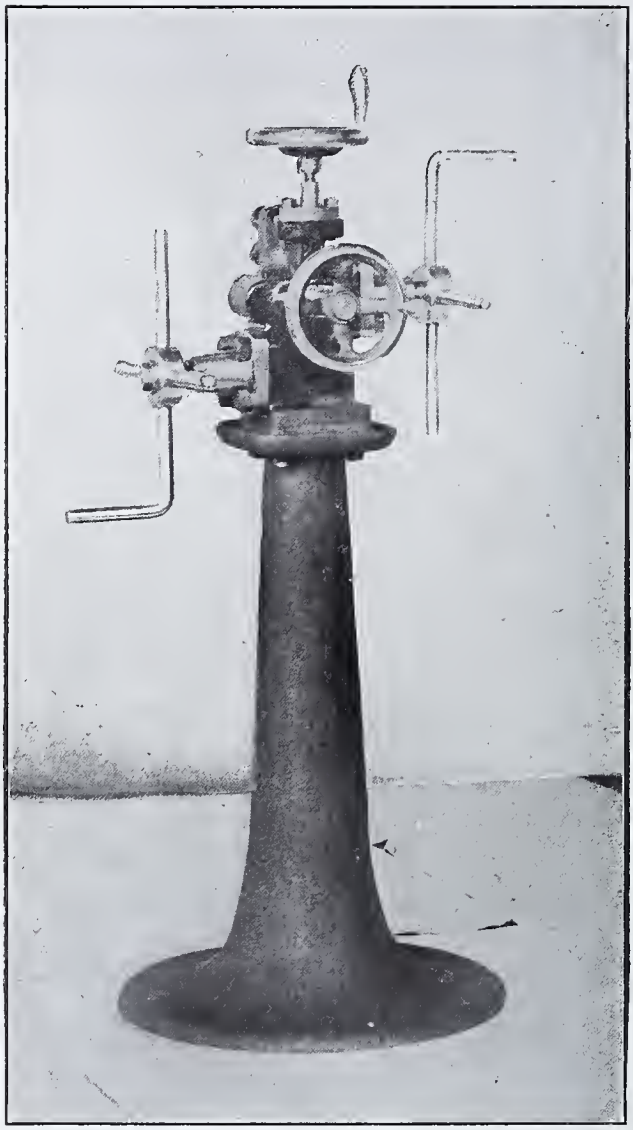

Fig. 292.—Hydraulic Guncotton Press Valve by means of which the High and Low Pressures are Regulated.

292, are used for each press, and by means of which the low and high pressure are regulated.[1]

1. The machines illustrated in Figs. 284, 290, 291 are all designed and produced by the Waterbury Farrel Foundry & Machine Co., Waterbury, Conn. Fig. 284 has a top cylinder head held by clips, the cylinder being a copper-lined steel cast-

Formation of Colloid into Strips or Rods. After removal of impurities by means of the "macaroni" press and compacting into a solid cylinder by the hydraulic press underneath, the blocks are kept in zinc cans with tightly fitting covers to minimize ether evaporation, until, by means of a "finishing" or "powder" press, the colloid

FIG. 293.—Formation of Smokeless Powder Grains. *A*, Hydraulic Press in which the Block *A* of Gelatinized Nitrocellulose, is Forced through the Orifice *H*, Resulting in the Formation of a Concentrically Perforated Tube *C*, which is Drawn over the Wheel *F*, to the Powder Cutter *G*, being Cooled as it Issues from the Press, by a Circulation of Cold Water through the Pipe *B*. *C* is a Rope of 12-in. Powder.

cake is hydraulically forced [1] into a long rope which is cut into pieces of a predetermined diameter, which pieces, upon expulsion of solvent,

ing. The top head and piston are leather packed, the stuffing-box being bronze. The powder cylinder is a steel casting 10 in. in diameter, the nut shown on the floor going into its lower end. The press is suspended from the lugs shown east on the upper edges of the water cylinder. The strokes of the three machines are 38, 51, and 40 in. respectively.

1. Under an impulse of 3,000–6,000 lb. per sq.in., depending upon the diameter of the powder grain.

become the finished pyrocollodion smokeless powder. These presses are shown in Fig. 295, and at *A*, in Figs. 293, 294. A block of colloid *D*, Fig. 293, is inserted in the press and pressure applied. At the head of the press *H*, Fig. 293, is inserted a cylinder as shown in Fig. 296, and in section in Fig. 297, the result being that the impact of the ram forces the colloid out of the aperture at *H*, Fig. 293, as an endless

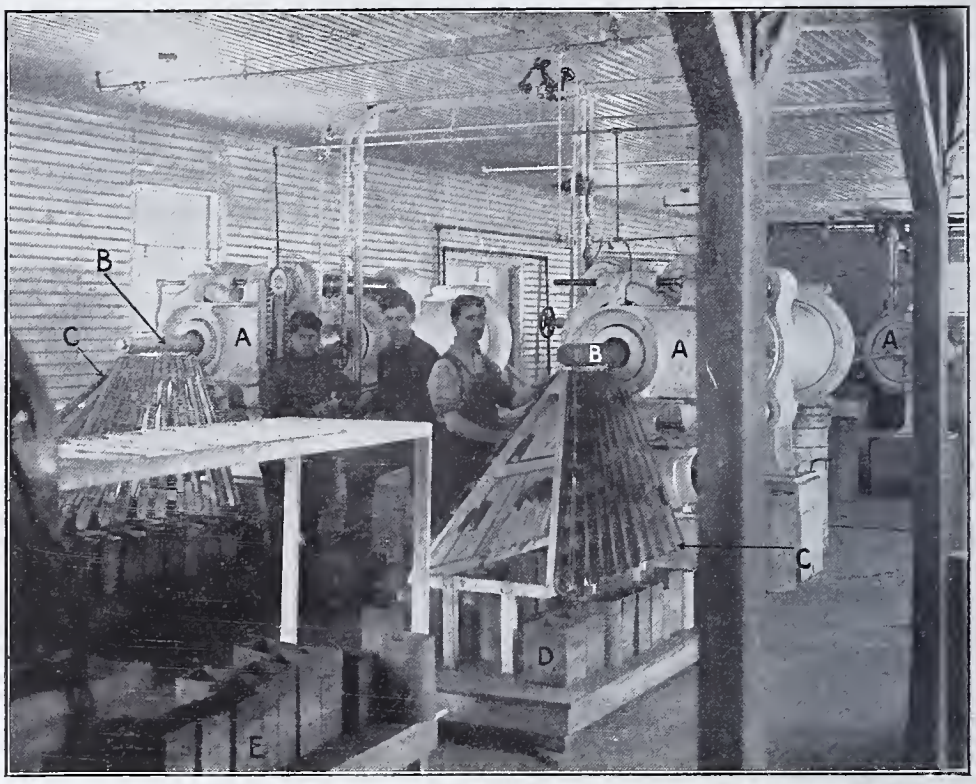

Fig. 294—Formation of Smokeless Powder Grains for Small Arms. The Press *A* is Similar to *A*, Fig. 293, the Head *B*, Containing Twenty Holes, each about 1 mm. Diameter, Arranged so that the Tube Issuing therefrom Contains one Perforation about 0.3 mm. Diameter. Upon Application of Pressure to *A*, Twenty Separate Tubes Issue from the Head *B*, each Traveling Down the Troughs *C*, into a Receptacle *D*. The Troughs are not Composed of a Continuous Sheet, but, as Shown, have Distinct "Falls," by which Means the "Powder Thread" is Less Liable to Break, and Travel through the Troughs More Readily. The Filled Receptacles *D*, are Transferred to *E*, and Pass through the Powder Cutter, which Severs the Tubes into Individual Grains about 2 mm. long.

rope (*C*, Fig. 293), flexible, warm and perforated with 1–7 circular passages arranged concentrically.[1] Notwithstanding the water-cooling

1. The object of the small lengthwise passages, best seen in Figs. 299, 300, is to produce a compensating burning surface, which increases proportionately as the external area of the powder grain diminishes upon burning. This produces the progressive burning quality, so essential in securing the proper initial velocity

FIG. 295.—Finishing Press for Pyrocollodion Powder.

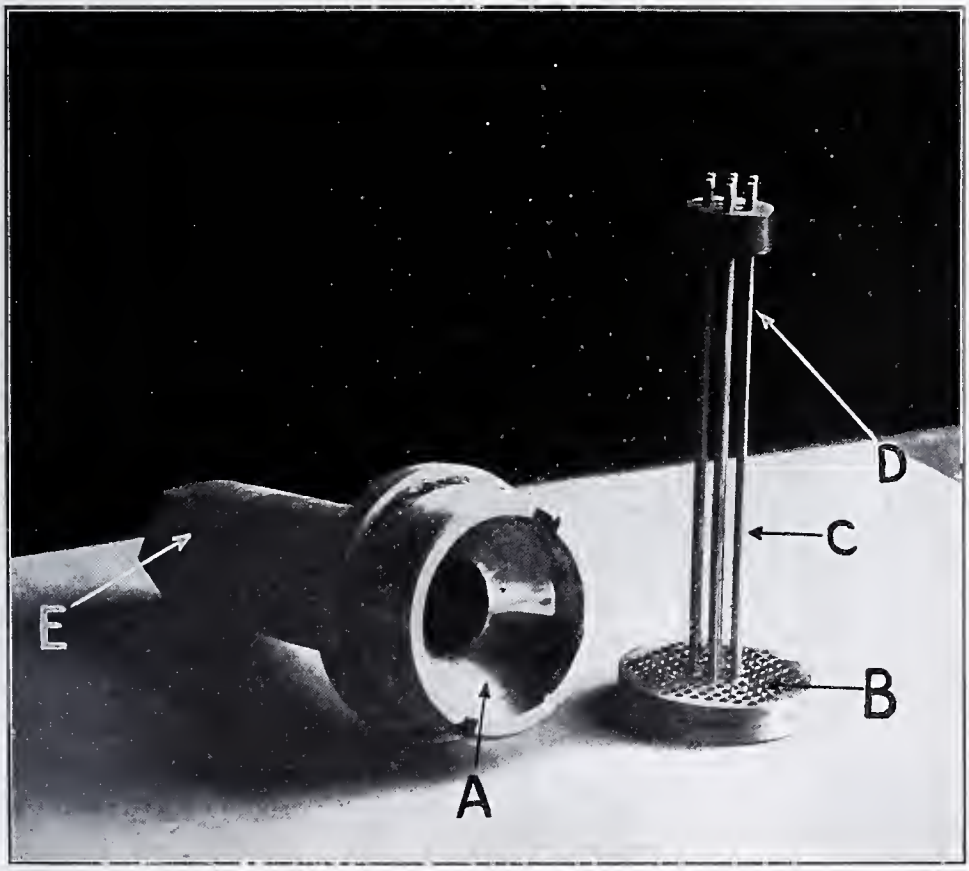

FIG. 296.—Hydraulic Powder-forming Press Head. *B*, *C*, *D* is Inserted in *A*, with *D* Toward *E*. The Colloid Passes through *B*, in the Direction of *D*, the Presence of *C*, Causing the Formation of the Group of Circular Passages. The Brass Head *B*, is a Plug used Simply to Start the Formation of the Colloid Rope, *E*, being the Exterior of the Press.

and other ballistic qualities without undue erosion of the rifling or other stress upon the gun.

According to H. Maxim (Forum, 1901, **30**, 595) the dense colloid of which smokeless powder is composed when properly made, is free from pores, and wholly impervious to the hot gases with which it is enveloped in the gun. While this material burns with comparative slowness when ignited in the air, and requires several seconds for the consumption of a grain of ordinary size, when burned under pressure, the action is so rapid that in the normal service pressure of a gun—about 35,000 lb. per sq.in.—the same grain is consumed in about $\frac{1}{60}$ of a second. The

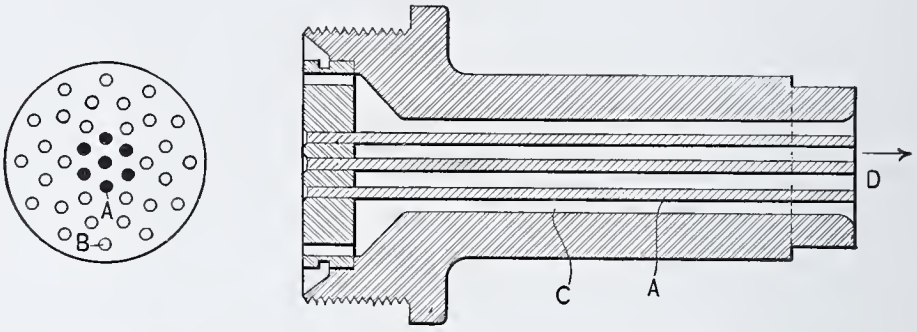

FIG. 297.—Section of Fig. 296. The Colloid Passes through the Holes *B*, into the Channel *C*, Emerging from the Press at *D*, (shown in Fig. 292).

FIG. 298.—End View of Hydraulic Finishing Press for Smokeless Powder Manufacture. From the Issuing Orifice, the Endless Rope, Perforated from End to End with a Concentric Group of Circular Passages is Led to the Powder Cutter.

expulsion of the products of combustion in burning smokeless powder grains generates a pressure upon the perforations in excess of that on the outer surfaces, and this causing a more rapid burning in the perforations, explains the reason for the strong blast of flame thrown out of the perforations at each end, when the powder is burned in the air. And this difference between internal and external pressure being increased in proportion to the increase in rate of combustion under service conditions, it is apparent that the tensile strength of smokeless powder grains (which is controlled by the nature of the colloiding solvent used, and the speed of

arrangement (*B*, Fig. 293), in the head *H*, and through which the colloid passes just before issuing from the press, the temperature of the issuing rope is 30–35°.[1] It requires from three to forty minutes

FIG. 299.—Partly Consumed Grains of 12-inch Gun Smokeless Powder. Each Grain when Ready for Use is about 50 mm. long, 21 mm. Diameter and Weighs about 24.5 gm.

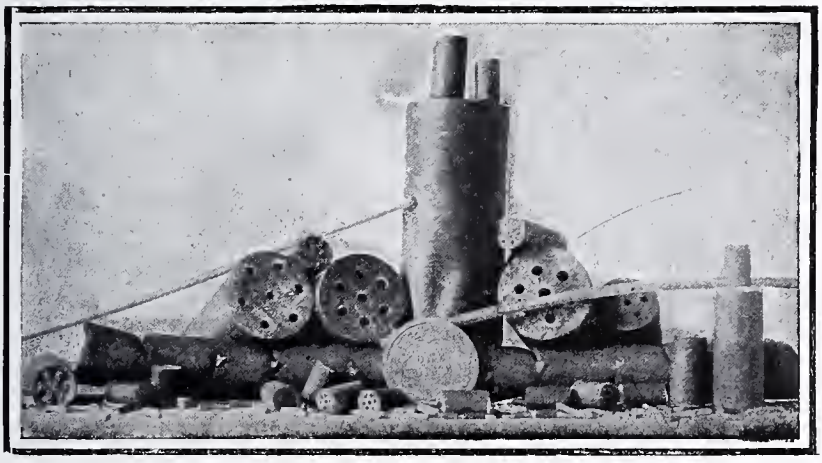

FIG. 300.—Smokeless Powder of Various Forms and Sizes Designed for Different Calibers of Naval Guns.

its subsequent elimination) becomes an important factor in preventing the disruption or blowing up in guns. The tangential strength, therefore, of a multiperforated smokeless powder grain is perhaps of as great importance as the strength of the gun in which it is proposed for use. If the powder grains be made too long or the perforations too small, they may explode, even when burned under atmospheric conditions. The higher the pressure in service, the shorter must be the individual grain.

1. In cooling, the flow of water is so arranged that the issuing colloid is about 30°, as it has been found that the knives of the powder cutter work better when the

to force a 40-lb. cake through the press, depending upon the size and caliber of powder being made.[1] Where the press is used to produce small-arm powder, as that shown in *A*, Fig. 294, it is usually spoken of as a "graining" press. From this press, the rope of nitrocotton is led directly to the [2]

eolloid is warm. The evaporation of ether is so high in the eolloid in this state, that if the rope is not eut into individual powder grains within two or three minutes time of issuanee from the press, there is liability of breaking the knives.

1. It is evident that hydraulie presses of this type are equally eapable of forming rods, tubes, strips, bands or sheets of pyroxylin plastie as deseribed in Chapter XIV, by varying the size and shape of the orifiee at *H*, Fig. 293, and sueh maehines are used at the present time for this purpose.

2. H. Maxim has patented (E.P. 9481, 1902) a process for making smokeless powder which eonsists in forming the material into rods or bars suitable for powder

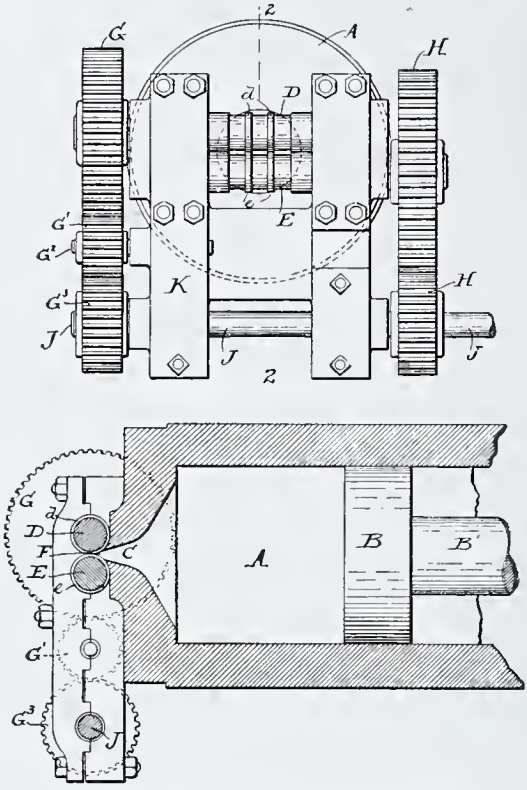

Fig. 301.—The du Pont Apparatus for the Manufaeture of Explosive Powder in Strips.

grains while in the plastie state, then evaporating a portion of the eontained solvent, and then piereing the rods or bars with perforations. The material is perforated from opposite sides to a depth whieh will leave sueh a thickness of material between the bottoms of the perforations as will just be burned through before the projeetile leaves the gun. The material between the bottom of opposite holes should be the same thiekness as that between the sides of adjoining holes. The eartridge ease is filled with sueh rods or bars, having rounded edges, of varying eross-sectional dimensions, but perforated in sueh a manner as to effeet the simultaneous eonsumption of all parts of the charge. See also J.S.C.I., 1901, **20**, 1141.

If it is desired that the plastie issuing from the hydraulie press shall be in

Powder Cutter. This consists of a feeding device (*A*, Fig. 302) which delivers the plastic colloid rope to the powder cutters, the latter being two knives attached to opposite sides of a wheel which revolves at right angles to the approaching colloid rope inclosed in *B*. Therefore in one revolution of the cutting wheel two grains of finished

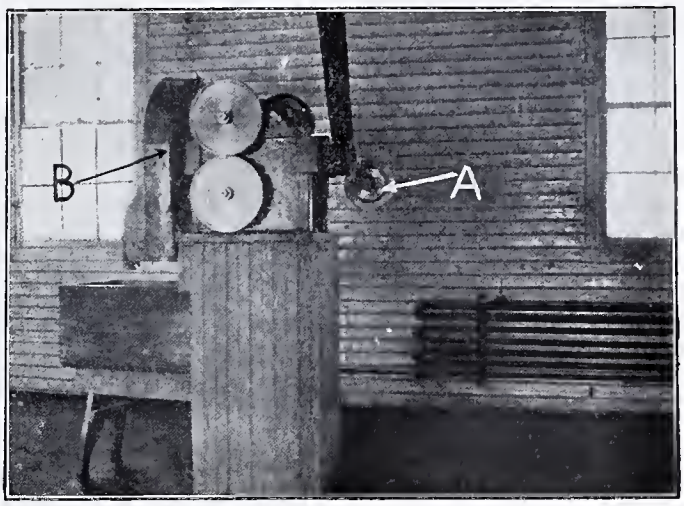

Fig. 302.—Smokeless Powder Cutter. The Warm Plastic Rope of Colloid Passes over the Wheel *A* and is fed against a Revolving Wheel, Located in *B*, and Carrying two Knives which Sever the Rope into Grains of the Required Length.

powder are fashioned. Upon being severed from the rope, the soft grains drop into a closely covered receptacle in order to minimize evaporation of ether and alcohol. When the container is filled, the

the form of strips, the method of F. I. Dupont (U.S.P. 790918, 1905), shown in Fig. 301, is indicated. This press was designed to obviate any tendency of the strips or rods to flow faster on one side than the other and consequently to come out crooked, or to produce a rod having a decided "grain," as the result of which the material has a tendency to break more easily in one direction than another. Instead of causing the passage of the plastic material from the opening alone by pressure applied behind the plastic, there is placed at the mouth of the opening a pair of rolls turned down at this point to a less diameter than the contiguous parts of the rolls, applying only sufficient force behind the plastic to feed it to the rolls, the rolls then delivering the plastic in even strips and without substantial grain. In carrying out this invention the explosive powder in plastic condition is placed in the cylinder *A*. Power applied to the piston *B*, forces the plastic material through the nozzle *C* and opening *F* to the space formed by the opening between the rolls, the material being confined from lateral movement by the walls *d* and *e* and the sides of the funnel, the pressure being insufficient to force the powder through the opening between the rolls. When the rolls are set in motion, the pressure being sufficient to feed the plastic powder between the rolls, the latter will carry it along, rolling it into a strip or strips of thickness dependent upon the depth of the grooves in the rolls. These compress the strip in the direction of its thickness. The cylinder piston and nozzle enable with properly applied pressure the plastic powder to be fed between the rolls, while the rolls form it into an even strip and compress it to the desired thickness.

grains are sorted, imperfect ones discarded, and the balance taken to an adjoining building, where the grains undergo a process of

Preliminary Solvent Recovery. At the moment the grains are cut into the finished lengths, they contain about 48% solvent, over 60% of which is ether. Of this 48% of solvent, 20% or slightly over 40% of it is economically recoverable by the following method: From the powder cutter the powder is transferred as quickly as possible to a solvent recovery building, being placed in rows and tiers of square-cornered boxes with sides of wood and bottoms of 12–20 mesh wire. By means of a brine system of refrigeration of the air, the maximum of solvent is recovered in from eight to ten days.[1] The mixed alcohol-ether solvent is used in the manufacture of ether, the ether, of course, passing through the process.[2] The recovered solvent consists roughly of 65% ether, 27% alcohol, 8% water.

The apparatus for evaporating solvent from smokeless powder as patented by P. Liedbeck[3] consists of a horizontal drum having one end open, revolving in a steam-jacketed casing. By means of an adjustable nozzle the powder grains are fed on to the inner surface of the drum along its whole width. Hot air is passed over the drum and the evaporated solvent carried to a condenser. By this means layers of explosive can be superimposed upon each other to any desired thickness, forming a hollow cylinder which can be cut open and removed from the surface of the drum, on detaching the casing.

If the solvent is driven out of the moist powder too rapidly, the latter may be spoiled by the formation of blisters, laminæ, cracks, and similar irregularities, and the ballistic properties of the powder affected. Therefore for obtaining favorable results the solvent must be evaporated slowly and uniformly with gradual heating, which may be effected by providing that during the distillation, the grain is constantly enveloped by the vapors of the mixed solvent in a closed receptacle whose temperature is regulated, and by so arranging the

1. The time required for maximum solvent recovery will vary with the caliber of the powder grain being dried, for 12 in. navy powder, being about four days. When the powder leaves the solvent recovery building it still contains 10–15% of solvent, a small portion, only, of which is recoverable.

2. One satisfactory method of treatment of the regained mixed solvent is to consider it as if composed entirely of alcohol. The solvent is then run into the lead still containing sulphuric acid, thence bubbled through caustic potash solution, thence through a parting column still, with pans heated to about 50°, whereby the ether goes on, and the alcohol and water vapor is condensed and falls back as in the usual process of manufacturing ethyl ether from alcohol. The alcohol which is recovered from the alcohol-displacement hydraulic press, before colloiding the nitrocellulose, is usually first submitted to a slow distillation in an alcohol rectifying still with high columns, whereby the alcohol is concentrated from 50% to above 83% in a single distillation.

3. U.S.P. 718484, 1903.

appliances necessary for the purpose that the solvent vapors which remain uncondensed, may immediately return to the place where they are generated. W. Nikolsky [1] has designed a plant to meet these requirements in which a specially constructed chest is used in which to heat the powder, an air compressor to draw the vapor out of the chest, a calcium chloride refrigerating system, which in turn is cooled by carbon dioxide or ammonia, and a receiver in which the condensed solvent accumulates. The arrangement is shown in Fig. 303. Where acetone is used as the colloiding fluid as with the highest nitrated celluloses—the guncottons proper—R. Robertson and W. Rintoul [2] propose to take the highly attenuated air from the dry houses in which the cellulose nitrate containing acetone is

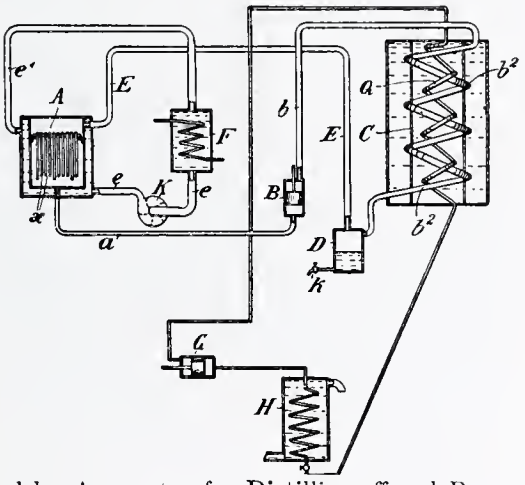

Fig. 303.—The Nikolsky Apparatus for Distilling off and Recovering Solvent Used in Explosives.

stored, the vapor being led through a special scrubbing tower,[3] through which a 30% solution of sodium bisulphite trickles. The acetone so absorbed is recovered from the bisulphite solution by direct distillation and condensation, without the addition of alkali, as practically all the acetone distills over before the bisulphite begins to decompose, and the latter can therefore be utilized again. On cooling the solution any sulphate formed crystallizes out.

The Final Drying of the Powder takes place in a separate building, in which no attempt is made to recover the volatile products. Of two systems of final drying in use in the United States at the present time, one depends upon the atmospheric air only for elimination of solvent, the air being heated to about 45°, with or without

1. U.S.P. 904636, 1908; E.P. 3661, 1906; abst. J.S.C.I., 1906, **25**, 868.
2. E.P. 25994, 1901; F.P. 329540, 1903; abst. J.S.C.I., 1903, **22**, 441.
3. See J.S.C.I., 1903, **22**, 85.

previous extraction of moisture therefrom. In the second or forced-draught system, the powder is placed in wooden trays or drawers (Fig. 304) arranged in tiers, the trays and supports being preferably put together by means of dovetailing and glue rather than by the use of nails and screws. The powder is exposed to this uniform temperature, which is usually automatically kept with $\pm 0.5°$ of the desired, for periods varying from two weeks to six months, depending upon the caliber of the grain, and until a sample rasped to a fine powder, and exposed to a temperature of 100° until no further loss in weight occurs, shows a maximum loss of from 0.5–1.5%.

FIG. 304.—Smokeless Powder Grains Undergoing Solvent Expulsion in the Dry House.

Circulation of air is maintained by means of fans, the air being heated by passage over steam coils, but whereas formerly the constant change of air was obtained by taking fresh air from outside, it was found that the moisture incidentally introduced affected in time the stability of the powder. More satisfactory and uniform results are to be obtained by simply circulating the air in the dry house, it having been found that the incidental opening and closing of the doors was sufficient to remove the solvent volatilized from the powder grains. One of the—as yet—insurmountable objections to pure cellulose nitrate powders when made into grains of large dimensions has been

the impossibility of eliminating the last traces of solvent used in manufacture.

Glazing. In the small arm smokeless powders of the .30 caliber type, as well as some powders for heavier work, the dried powder is glazed or lightly coated with graphite for ease in loading and to minimize erosion of the rifling of the gun barrel. The grains are first sorted by hand to discard any grains defective as to color or shape, or with the final grains, careful inspection takes the place of hand sorting. About 2 lb. graphite per 1,000 lb. powder is the usual proportion in glazing small arms powders in the United States, the graphite and powder being fed in a revolving screen barrel, where they are slowly tumbled or rumbled for the specified time, after which the glazed powder is packed in 110 lb. boxes or 50 lb. canisters. The glazing process is a blending process as well, especially if the contents of the tumbling apparatus be composed of portions from several separate batches of powder. In the glazing method of A. I. du Pont [1] designed for the glazing of blasting powder and gunpowder, but equally applicable to smokeless powders, the powder is placed in a wooden or metal drum carrying steam connection, which is tumbled for one-half to one hour at a temperature of 65–75° in order to bring to the surface of the grain and dissipate any moisture present.[2] The graphite is then added, the temperature of the drum lowered, thus causing deposition of the contained moisture on the sides, and rotation continued, until the grains are covered with a thin, protecting graphitic pellicle. W. J. Williams [3] has described a method of glazing smokeless powder in which the grain is coated with a weak solution of a deterrent combustible, preferably mononitronaphthalene. A 3–5% solution of the nitronaphthalene is made, using a mixture of 85% alcohol and 15% ether, or other weak nitrocellulose solvent. The powder is immersed in this liquid until incipient softening of the powder grains is apparent, after which the solvent is removed, the powder centrifuged and afterwards dried at a gentle heat. If the melting point of the deterrent is low (43° for mononitronaphthalene) the powder may be coated by tumbling in a barrel at a temperature just above the liquefying point of the glazing material.

Blending. In order to render the finished powder as uniform as

1. U.S.P. 733741, 733742, 1903; E.P. 7695, 7712, 1903; F.P. 331066, 331067, 1903; abst. J.S.C.I., 1903, **22**, 822.

2. A small amount of moisture in the powder grain requires an elevated temperature to bring it to the surface, and it is necessary to eliminate this moisture from the grain before the addition of the graphite, or the latter refuses to adhere. By this method glazing is said to be accomplished in much less time than ordinarily employed, and the finest sizes of powder successfully and uniformly coated.

3. U.S.P. 825168, 1906.

possible as regards nitrogen content, solubility, composition and propulsive power, it is customary to blend all smokeless powders before they are packed for use. The smaller the individual grain, the more simple is the blending process. The following, known as the "barrel and bin" method and the "tower" method, are used at the present time for blending large caliber grains, to the author's knowledge, and with satisfactory results.

In the tower method a building of three or better four floors is constructed, the center of each floor consisting of a wooden funnel, tin-lined and of capacity of about 4–5 tons of powder. The funnel on one floor is directly in line with that of the next, the lower funnel neck being directly over a weighing machine, automatic or otherwise. The blending is produced mainly by devices located in the necks of the funnels on the several floors, the necks being square, some of the devices being as follows: (*a*) the neck is divided diagonally into four equal triangles, which spread out the grains as they drop into the next lower funnel; (*b*) a hemispherical wooden block, convex toward the neck, is placed a few inches lower than the bottom of the neck, the effect being to spread the powder grains, on the same principle as the spray from a ball-nozzle; (*c*) the neck is divided into four chutes branching out at right angles, which distribute the grains at the four corners of the succeeding funnel; (*d*) the neck may terminate in a 10 in. canvas hose, by means of which the grains may be distributed around the next lower funnel, and at the will of the operator. The neck may contain a square box of a height above the pile of powder grains, when by lowering this box or hollow shaft, the grains from the top of the pile are first taken, and become the bottom of the next lower funnel. The powder is raised to the top floor by means of a hoist, and allowed to percolate down through the different funnels, being intercepted and dispersed by the mechanical arrangements in the neck of each. At the last fall, the grains are weighed out into regulations containers, and stored in a cool, dry place of uniform temperature.

In another arrangement a series of smaller vats are made to empty into a larger one by a series of chutes which pour together into the main chute. By having four floors to a blending house using this method of admixture, the process is repeated twice, and a thorough blend is obtained. The methods used to blend grain in elevators and mix flour in mills are equally applicable to powder.[1]

Ballistite. The first combination of nitrocellulose with nitroglycerol to form a smokeless powder was the ballistite of A. Noble patented [2]

1. For method of blending smokeless powder at (presumably) Picatinny Arsenal, see Jour. U.S. Artil., 1910,, **34**, 148.
2. E.P. 1471, 1888. F.P. 185179, 1887; 199091, 1889.

in 1888. The original ballistite was composed of nitroglycerol 100, soluble nitrocellulose 50, camphor 10 and benzene 200 parts.[1] The composition was subsequently modified to equal parts of nitrocellulose and nitroglycerol, the camphor being eliminated, and about 1% of diphenylamine added as a stabilizer. Ballistite is at present manufactured according to the method of Lundholm and Sayers,[2] in which both nitro compounds are placed together in hot water and agitated by compressed air, which causes the nitrocellulose to pass into solution in the nitroglycerol, the water acting only as an inert carrier. The paste resulting from this union is freed from water centrifugally, and allowed to stand for several days for obscure changes to take place. It is then passed between heavy rollers in a masticating machine in a manner similar to the conversion of pyroxylin and camphor into celluloid, and this simultaneous pressing and heating continued until the nitrocellulose goes entirely into solution in the nitroglycerol. From the masticating machine, the product, still warm and plastic, passes through a powder strip machine where it is rolled out flat,[3] and cut into right parallelopipeds, the flakes being about 3 mm. area and 1 mm. high.

In Italy, where it forms the Service powder at the present time, it is rolled out into cords, which may be cut off into cylindroids, the cord-shaped modification being known as " Filite."[4] Ballistite is a blackish brown color, horny and non-plastic, burning with many sparks when ignited. It has a density of 1.6, is not readily affected by moisture, and like all smokeless powders, when heated above 40° gives greater velocity, flatter trajectory and greater gas pressure when fired. On account of the high heat of combustion, due to the presence of the large amount of nitroglycerol, the rifling of guns is rapidly eroded.[5]

1. The object of the benzene was to facilitate the solution of the nitrocellulose in nitroglycerol, as acetone is used in cordite and alcohol in pyroxylin plastics.

2. E.P. 10376, 1889. For the microscopic structure of ballistite see E. Paterno and F. Traetta-Mosca, Gazz. chim. Ital.; Z. ges. Schiess-Sprengstoffw., 1910, **5**, 144.

3. On rolling many smokeless powders, small local explosions occur in the rolled sheet, which formerly were attributed to the cracking of air blisters, but as traces of burning have been observed it is more probably due to the explosion of ungelatinized collodion cotton, which at the temperature of rolling, is quite sensitive to friction.

4. Solenite, also made in Italy, consists of nitroglycerol 30, insoluble 40, and soluble nitrocellulose 30, the two having an average of 12.6% N. The insoluble nitrocellulose is brought into solution by means of acetone.

5. Ordinarily ballistite paste is formed into leaflets, but in addition to this form of granulation another form called Tubeite is prepared. In those instances where better ballistic effects are to be obtained by the use of a large air space around the different grains of explosives, another division into small discs or tubes is made, somewhat larger than the usual size of powder grains. The grains formed by this alternative process are called Tubeite. For detailed information on the manufacture of ballistite with cut of ballistite mixing machine and rifle cartridge loader, see Arms and Expl., 1896, **5**, 4.

Cordite.[1] It has been claimed that certain defects developed in the earlier forms of ballistite, mainly due to attempts to incorporate into the mass camphor and other bodies. The English Government, through F. Abel and J. Dewar, obtained patent protection [2] the year after Nobel's ballistite patent had been granted, for an explosive in

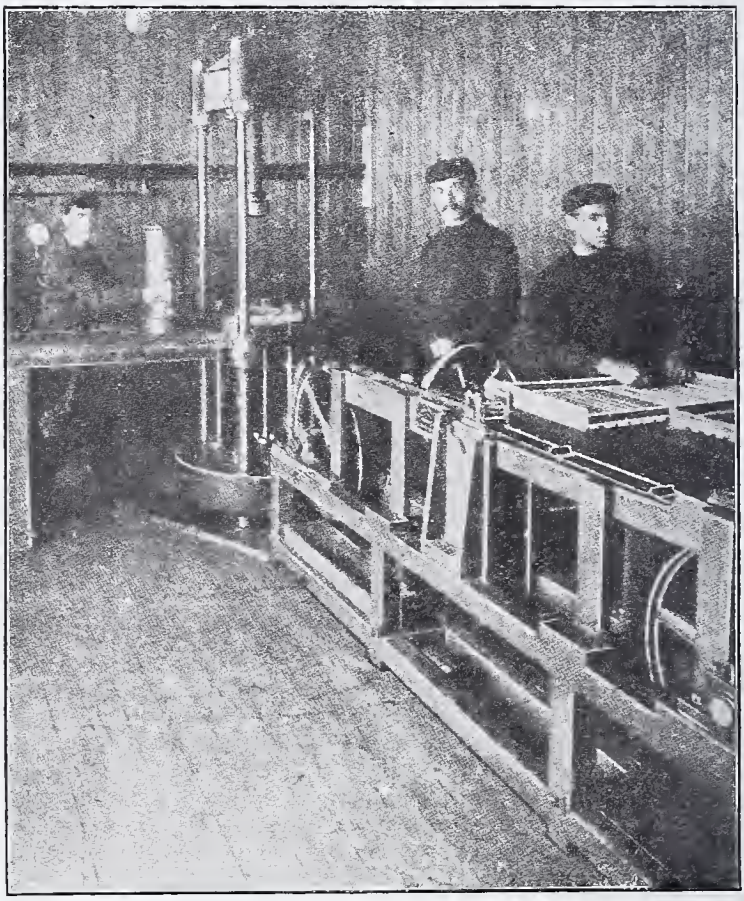

Fig. 304.—Pressing Cordite (Figs. 304–308 are taken from Arms and Explosives, **6** 241, 242).

which nitroglycerol is combined with nitrocellulose, a small amount of vaseline being included.[3] The original product, to which the name

1. See Arms and Explosives, 1901, **9**, 67; 1908, **16**, 44; 1910, **18**, 85, 100. For "Investigation of the Law of Burning of Modified Cordite," see Mansell, Phil. Trans., 1907, **207**-*A*, 243; Proc. Roy. Soc., 1907, **79**-*A*, 397; Arme and Expl., 1907, **15**, 106. For mercury in eordite see J. Nav. Eng., 1907, **19**, 780; Haldane, Mitt. Seew., 1907, **35**, 798; Marshall, J.S.C.I., 1904, **23**, 645; E. Anderson, Arms and Expl., 1898, **6**, 71.

2. E.P. 5614, 11664, 1889; F.P. 198496, 200275, 1889.

3. No doubt Nobel's ballistite patent paved the way for the combination of nitroglycerol with nitrocellulose, but H. S. Maxim preeeded (E.P. 18663, 1888; 4477, 1889) Abel and Dewar in a measure, although whereas Maxim mentioned the addition of 2–10% nitroglycerol to an aeetone solution of guncotton, this was

of "Cordite" was applied,[1] consisted of nitroglycerol 58%, guncotton insoluble in nitroglycerol 37%, and mineral jelly, a product of distillation of crude petroleum 5%. To effect the gelatinization of the guncotton, 19.2 parts of acetone was employed. The large proportion of nitroglycerol present resulted in a very high heat of explosion, and the erosion produced on the rifling of the guns, especially in the high calibers, was considerable. This led to experiments being carried out in 1890, as the result of which a less erosive explosive was evolved, to which was given the name "Cordite M.D," or or "M.D.S. Cordite," and in which the nitroglycerol is reduced to 30%, the other constituents being guncotton[2] 65%, and mineral jelly[3] 5%.

omitted in the complete specification. For the question of whether the English Government did or did not pirate the ideas of Noble and Maxim in obtaining Cordite, see reports of various lawsuits abstracted in Arms and Explosives.

1. So-called on account of the string-like or cord-like appearance.

2. For the manufacture of cordite, the British Government specifies that the cotton waste used shall not contain over 5% moisture, over 1% ash, or more than 0.8% fat when ether extracted in a Soxhlet. The guncotton, which contains, as a rule, not over 10% of soluble guncotton, is made by the Thomson Displacement Process of nitration, as described in Chapter III, with the following differences: The composition of the nitrating acid is said to be sulphuric acid 70.6%, nitric acid 21%, nitrous acid 0.6%, and water 7.9%. The quantity in each pan above the bottom plates is 600 lb., and below the plates is an additional 50 lb. A charge of 20 lb. of cotton waste is then immersed in the acid handful by handful. aluminum dipping forks being used for this purpose. When all the cotton waste has been pushed under the surface of the acid, perforated plates in segments are placed on the top of it, care being taken that all cotton waste is below the surface of the acid and a film of water at a temperature of from 5–8° is run gradually on the surface of the plates through a distributor.

The nitration is allowed to proceed a maximum of two hours, at the expiration of which time a cock is opened and the acid allowed to run off at the rate of 17 lb. a minute. Water, cooled if necessary, is run on to the top of the perforated plates through the distributor at an equivalent rate. The major portion, amounting to about 80% of the total waste acid, is returned to the acid store tanks to be revivified with Nordhausen sulphuric and new nitric acids. The composition of this waste acid is: 72.70% sulphuric acid, 17.30% nitric acid, 0.65% nitrous acid, 9.35% water. The remaining 20% of the waste acid is sent to the acid concentration factory for denitration and concentration. The quantity of acid thus dealt with amounts to about 4 lb. for every pound of guncotton. Its composition is: 61.00% sulphuric acid, 17.35% nitric acid, 0.55% nitrous acid, 21.10% water. A small proportion of the water which follows the recoverable waste acid is slightly acid to the extent of about 0.1 lb. for every pound of guncotton made. This is the total quantity of acid that is lost during the process.

According to Kynoch, Ltd., and A. Cocking (E.P. 457, 1903) in the manufacture of explosives, such as "Cordite M.D.," containing a high proportion of guncotton (65%) danger arises during the hand-mixing and subsequent incorporation in the kneading machines, because the proportion of nitroglycerol is insufficient to moisten the whole of the guncotton. To minimize the danger arising from this dry guncotton dust, it is proposed to dissolve the nitroglycerol in its own volume of methylated spirit before adding it to the guncotton, and thus a thorough wetting of the latter is obtained. The acetone is added, as usual, in the incorporating machine, but a smaller quantity will suffice. Any other volatile liquid ingredient, such as ether, benzene, or naphtha, will also serve the purpose, provided it dissolves nitroglycerol, and does not gelatinize guncotton, and is used in sufficient proportion to thoroughly moisten the guncotton.

3. F. L. Nathan (Discourse delivered at Roy. Inst., Jan. 29, 1909; reprinted C. N. 1909, **99**, 136, 152, 159) says:

"Cordite in the advanced experimental stage consisted of nitroglycerin and guncotton alone, and as their combustion produced no solid residue of any kind, the surface of the bore of the magazine rifle in which the early experiments took place was not fouled in any way. The result was that the cupro-nickel coated bullets, propelled in succession at high velocity through a clean barrel, deposited some of the cupro-nickel in the bore. In order to prevent this a number of substances were incorporated with the nitroglycerin and guncotton, with the object of producing a deposit of the bore, which it was hoped would get rid of the difficulty of metallic fouling. Of all these various substances the one which appeared to answer the purpose most satisfactorily was refined vaseline, and this material became the third ingredient of cordite as eventually introduced into the British

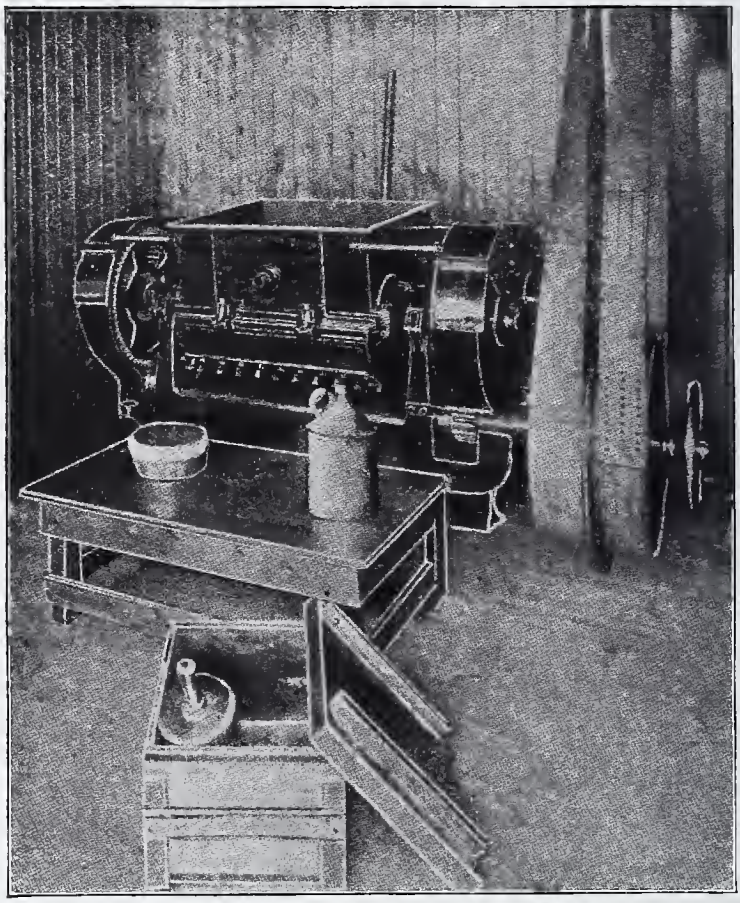

FIG. 305.—Cordite Kneading Machine.

Service. When the manufacture was commenced on a large scale, vaseline, which is the proprietary name of one of the refined products of the distillation of petroleum, was replaced by mineral jelly, the same material, but in a cruder form.

"The original object with which mineral jelly was introduced was of no importance when cordite was substituted for the black and brown powders used in large guns, but in order to have but one nature of smokeless powder in the service, mineral jelly was added to all cordite whether for use in small arms or artillery. Subsequent experience has demonstrated how very fortunate was the selection of this material for rifle cordite and the extension of its use to all sizes of cordite.

"Mineral jelly is one of the best ingredients it is possible to have in smokeless powders from the point of view of their chemical stability. This important

The method of manufacture of cordite as described by W. Anderson [1] is as follows: The guncotton is transported to the nitroglycerol factory [2] the required amount of nitroglycerol poured over it, the

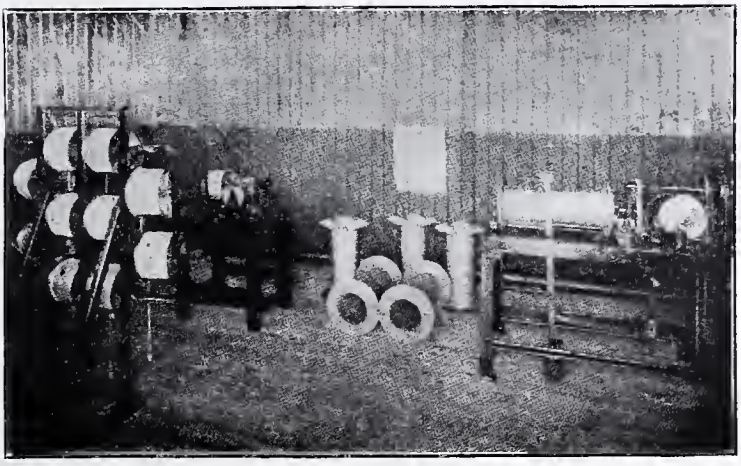

FIG. 306.—Re-reeling (Blending) of Cordite

guncotton having been previously dried. The two constituents are mixed either by hand as in the earlier method, or by machinery aided

fact, not recognized originally, was brought out in the following way: In order to facilitate the explosion of cordite in blank ammunition for the rifle, it was cut into very thin flakes, and the non-explosive mineral jelly was omitted from its composition. After a comparatively short storage in a hot climate, the stability of the smokeless blank, as it was called, was found to have suffered seriously, whereas the stability of normal cordite containing mineral jelly was not appreciably affected. These facts led to a thorough investigation at Waltham Abbey of the action of mineral jelly in preserving the stability of cordite, and it was discovered that mineral jelly contained constituents which had the valuable property of combining with the decomposition products (the result of prolonged storage of cordite at high temperatures) to form stable bodies, thus removing these decomposition products, which undoubtedly exert a deteriorating influence on the cordite, from their sphere of action."

In the E.P. 18269, 1904, L. Le Broeqy, claim is made for the employment, in the manufacture of cordite, of a pure or refined hydrocarbon oil or jelly such as "white mineral jelly" or *paraffinum liquidum*, with or without the addition of paraffin wax or ceresin or both, in place of the "semi-crude mineral jelly" usually employed. The deterioration which cordite suffers on exposure to heat and light or by mere storage for a length of time is stated to be due to the fact that the "semi-crude mineral jelly" employed in its manufacture becomes partially nitrated owing to its content of olefines and naphthenes.

1. "Properties of Cordite," the Inst., 1899, 16 pp. Reprint Minutes of Proceedings Inst. Civ. Eng., 1898–1899, v. 136, pt. 2. An exhaustive and detailed article of manufacture of cordite with cuts of machinery used. For cording manufacturing apparatus, see G. Kynoch & Co., Ltd., and A. Cocking, E.P. 22190, 1897.

2. The nitroglycerol and nitrocellulose are mixed in the building where the last stages of manufacture of the former is carried on, it having been found that mixing the two explosives results in a comparatively inert compound, which although highly inflammable is not easy to explode and may be transported from place to place with safety. If, therefore, any storage of the incompletely prepared cordite is required, it takes the form of this mixture, rather than of the separate ingredients.

by air under pressure. The mixture is then placed in a mixing machine similar to that shown in Figs. 60, and, 292[1] preferably surrounded by a water-jacket, the acetone (20%) poured in, and the mass slowly kneaded for 3½ hours.[2] At the end of this time the vaseline is added in one portion and the mixing continued for a further period of 3½ hours, at the end of which time it will have been found that the

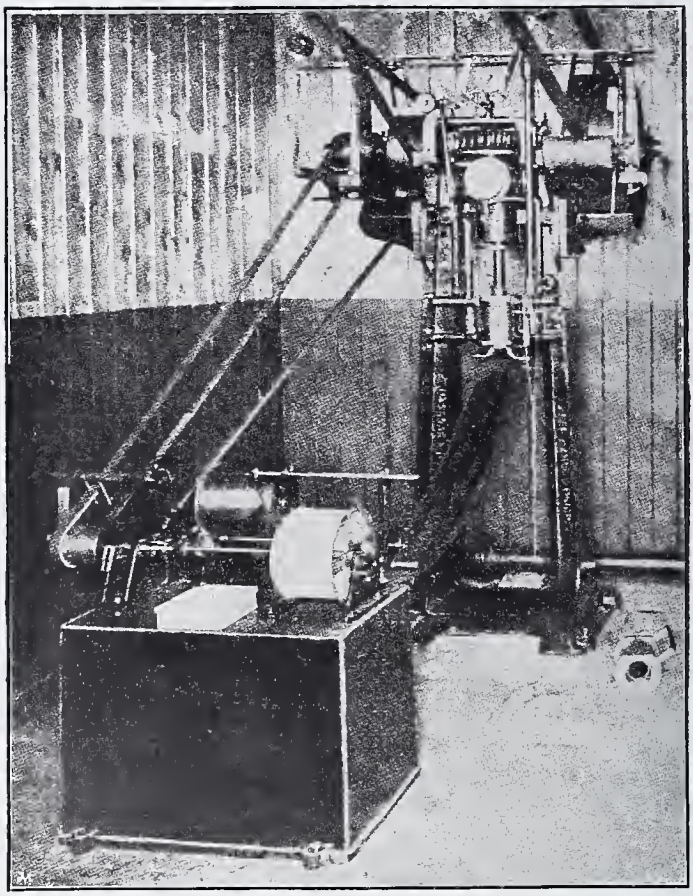

Fig. 307.—A Rifle Cordite Press.

acetone has completely penetrated both the nitrocellulose and nitroglycerol, producing a homogeneous structureless and non-granular paste, of the consistency of dough. The cordite paste is hydraulically pressed into cord form, by means of presses similarly acting to

1. Wood (cypress or oak) may replace the steel body and iron mixing paddles, to minimize danger.

2. To guard against frictional electricity developed by the belts, connect the machines electrically to the ground, and place a brush collector, also earthed, near the belt. For fourteen cuts of Stowmarket Cordite Works, see Arms and Expl., 1898, 6, 238.

those shown in Figs. 292, 293, 294, the plastic issuing from the press in one or more solid or tubular ropes.[1] If the mass is too soft to admit of hydraulic pressure it is first treated in a preliminary press to compact the mass and to free it from air as much as possible. As the card issues from the press it is reeled onto sheet-metal drums for the smaller sizes, taken to drying houses and the solvent expelled. Although nitroglycerol-containing propellants are more elastic than nitrocellulose powders, the elasticity increasing with the nitroglycerol content,

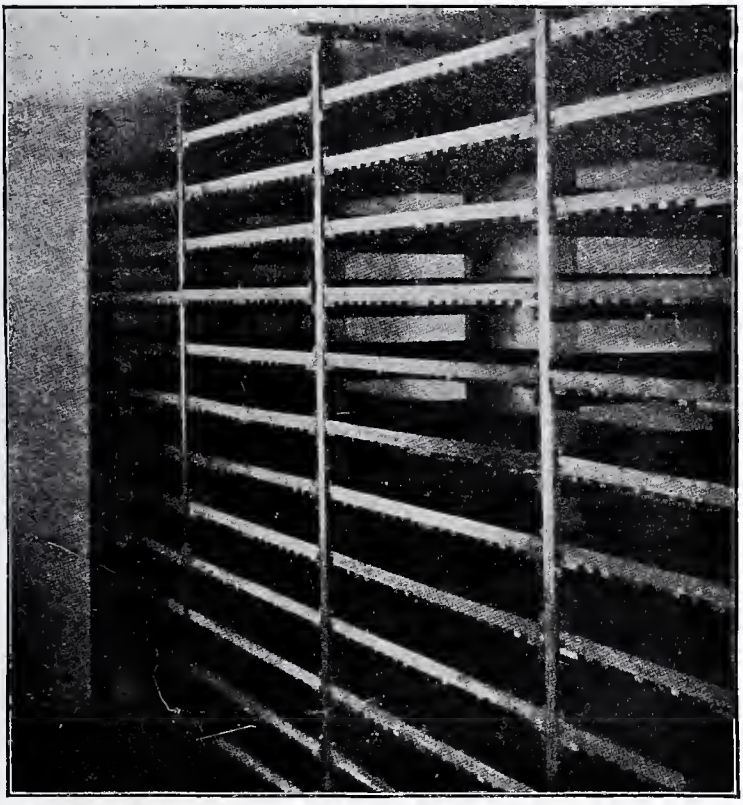

FIG. 308.—Cordite Drying Room.

only the smaller sizes can be dried on reels and still remain sufficiently elastic to admit of re-reeling when dry, it having been found that the cords of larger caliber, like pure nitrocellulose, become too brittle and

1. The diameters vary from 0.0375 in. for the 0.303 in. rifle to 0.5 in. for 12 in. naval gun, the smaller sizes being solid, and the larger containing a single, central perforation. Cordite M.D. contains about 0.8% combined acetone and moisture, the latter being the major portion. For "Temperature of Combustion of M. D. S. Cordite" see F. Jones, Arms and Expl., 1906, **14**, 7; for ballistics of same, see Ibid., p. 10. See also Arms and Expl., 1905, **13**, 54, 122; 1904, **12**, 19; 1903, **11**, 63.

inflexible to admit of sufficient bending when the solvent is eliminated.[1] Drying is conducted over steam pipes heated to 100° F., and varies in time from 3½ days for size No. 3 (0.03 in. diameter) to fifteen days for size No. 50 (0.5 in. diameter). The larger sizes may be cut into strips with a powder cutter, and placed in lengths on trays in the dry-house, to facilitate expulsion of solvent. The cords are blended after drying by reeling ten reels onto one drum simultaneously[2] and in the smaller sizes, by re-reeling the contents of six larger drums to a single drum, thus giving a blending of one in sixty. The larger strands are most conveniently blended by hand. After blending, they are cut into the required lengths for filling the various-sized cartridges, a load consisting of one cut of the sixty strands the prescribed length.[3]

The finished explosive appears as light to dark buff cylinders, either solid (in the smaller sizes) or with a single central perforation (in the larger sizes), the color of the vaseline used modifying in a large measure the shade of the finished product. Its consistency is that of vulcanized rubber, with yellowish fracture. The fractured surface usually has an odor of acetone. When ignited, it, like the pure nitrocellulose powders, burns with a luminous flame which may be readily extinguished by blowing sharply on it.

The constants of explosion of cordite and cordite M.D., determined at the Royal Gunpowder Factory, are as follows:

Explosives.	Density of loading.	Heat of explosion at constant volume, water gaseous.	Total gases, water gaseous at 0° C. and 760 mm.	Temperature of explosion.
		Calories per gm.	cc. per gm.	°C.
Cordite.....	0.2	1156	871	2663
Cordite M.D.....	0.2	965	920	2374

This shows a decrease in the heat of explosion of about 16½% and an increase in the volume of gases of about 5½%, while there is a decrease of 289° in the temperature of explosion. As would therefore be expected the erosion produced by cordite M.D. is very much less than that produced by the original cordite for the same ballistics, and is said to be not greater, if as great, as that produced by the best

1. It was found that the larger sizes became so stiff as to acquire a permanent set to the curves of the reel, while the cordite for rifle cartridges did not suffer from this cause, and for it the reel system as been found most convenient.

2. The 10-strand re-reeling machine will take 25 lb. cordite per hour, the speed of reeling being 254 ft. per minute. The 60-strand will reel 36.5 lb. per hour at a speed of 52 ft. per minute.

3. Cordite without vaseline is used for blank cartridges, the cordite made without vaseline being used in the form of chips instead of cords, but being made by cutting up the cords.

forms of nitrocellulose. R. Robertson [1] has found the heat developed by the explosion of cordite M.D. to be 200 calories less than that of cordite, which is in accord with the investigations of J. Petavel.[2] F. Jones [3] found that with an actual composition of cordite M.D. of 13% nitrogen guncotton 68.84%, nitroglycerol 29.47%, vaseline 4.91%, and moisture 0.79%, the equation for combustion may be expressed as

$$12C_6H_5(NO_3)_3+32CH_2+C_{10}H_{10}O_5+5C_{24}H_{29}O_{20}(NO_2)_{11}+4H_2O= 65CO_2+129CO+68H_2O+70\tfrac{1}{2}H_2+45\tfrac{1}{2}N_2,$$

the weight in grams involved being 9123.

M. Abelli [4] attempted to obtain an explosive of the general nature of cordite, which shall develop the minimum temperature of combustion consistent with maintenance of the maximum ballistic force. He claims that nitroguanidin, $NH_2.C(NH)NHNO_2$, which is stable, decomposes at a temperature above 200° and is insensible to shocks and friction, diminishes in a marked degree the corrosive effect on the metal of the gun. As a combination which gives to projectiles unusually high initial velocity with relatively low pressures, and with temperature of explosion so sufficiently moderate that the erosion of the rifling is almost wholly eliminated, the patentee submits nitroglycerol 45, nitrocellulose 30, nitroguanidin 25 (all parts by weight) [5]. A. T. Cocking [6] attempted to overcome some of the defects of cordite

1. Proc. Roy. Soc., 1907, **79-A**, 320.

2. This author (Brit. Assoc., Southport, 1903, Engineering, 1903, **76**, 452) carried out a series of experiments with cordite in spherical and cylindrical explosive chambers connected with recording pressure-gauges. The spherical chamber had a diameter of 10 cm.; the cylindrical chamber was 69 cm. long and had the same capacity as the spherical one, viz., about half a liter. The cordite was used in the form of thin threads or sticks, and the influence of the size of the cordite, of the charging density (expressed as the weight of the charge in gms. divided by its volume in cc.), which is also the gas density after the explosion, and of the shape of the inclosure was determined. The pressures recorded reached 2,000 atmospheres. The fact that the larger and the more finely divided the material of the charge, the quicker is the explosion, i.e., the steeper are the explosion curves, was confirmed. The explosive burnt quicker under high than under low pressures. By doubling the charge, more than double the pressure was produced. In the cylinder the charge cooled four times as quickly as in the sphere. In the experiments with the sphere the explosive-wave curves were regular, but with the cylinder they were wavy, owing to the vibrations set up. When the charge was not uniformly distributed, these vibrations became dangerous. See also Lee and Petavel, Proc. Roy. Soc., 1907, **79-A**, 277.

3. Arms and Expl., 1906, **14**, 7.

4. U.S.P. 899855, 1908; in F.P. 360787, 1905, dicyandiamidine, guanidine nitrate, and nitrosoguanidine are specified as cooling agents in propellants, resulting in lower temperatures of explosion without loss of ballistics.

5. The nitroguanidin, which is crystalline and difficultly soluble in water, may be incorporated with moist nitrocellulose mechanically, or by means of a mutual solvent, as ether-alcohol, ethyl acetate, amyl acetate or acetone.

6. E.P. 15565, 1905; U.S.P. 903?58, 1908.

by the addition of alkali and alkaline earth tartrates [1] together with a vegetable oil to a nitrocellulose-nitroglycerol propellant, his preferred formula being [2]

Nitroglycerol	30 to 40 parts.
Nitrocellulose	60 to 50 parts.
Vaseline	2.5 parts.
Olive oil	2.5 parts.
Potassium tartrate	0.9 parts.
Barium tartrate	4.0 parts.

The three most pronounced favorable qualities of propellants of the cordite type are, safety, stability under varying climatic conditions, and uniformity with regard to ballistics. The main objection to it is that the high degree of heat developed upon combustion causes

1. 4% barium tartrate and 0.9% potassium tartrate is specified, which mixture upon combustion produces 2.8% barium carbonate and 0.55% potassium carbonate. The purpose of the addition of these salts is stated to be to lubricate the gun barrel, neutralize any acid products of combustion which would otherwise cause corrosion; which is substantially as smokeless as an explosive in which barium without potassium tartrates is used; and has the lubricating properties of an explosive in which the potassium without the barium salt is used. Tartrates lower the temperature of combustion.

2. The proportions of nitroglycerol and nitrocellulose may be varied within the above limits, but for an explosive of moderate power the preferred proportion is 35 parts nitroglycerol and 55 parts nitrocellulose.

The nitrocellulose is first incorporated with the nitroglycerol; then the vaseline with the olive oil and the mixed tartrates added. This latter mixture is then thoroughly incorporated with the first or nitroglycerol-nitrocellulose mixture until a homogeneous plastic mass is obtained. To obtain the best results it is preferred to give the explosive compound the shape of strips or flakes of ribbon section with longitudinal ribs. The purpose of the addition of olive oil or like fixed oil soluble in acetone, alcohol or other solvent used in the incorporation, is to reduce the temperature of combustion, while olive oil also has the important property of giving greater chemical stability to the compound. According to H. Maxim (E.P. 28376, 1904) in making rods or cylinders of a self-combustible compound, designated "motorite," which are intended to be burned in a confined space to provide motive power for driving automobile torpedoes, the difficulty presents itself, that if the rods are made by forcing the plastic "motorite" through dies, longitudinal rifts or cracks occur which allow the flame to pass along the rod, so that explosive rather than progressive combustion ensues. To avoid this difficulty the "motorite," which is a mixture of 60 parts of nitroglycerol, 5 parts of soluble guncotton, 35 parts of trinitrocellulose or "military guncotton," and dissolved in 30 parts of any suitable solvent such as acetone, is kneaded thoroughly and rolled into sheets, part of the solvent being evaporated by heating the rolls to 120° F., any cracks that may be formed being in a direction parallel to the surface of the sheets. The sheets are punched into disks, which are placed one upon the other and pressed, forming short cylinders. The flat surfaces of these cylinders are moistened with the solvent, several cylinders being then built up into rods or longer cylinders. The solvent is dried off and the sides of the rods coated with a varnish which is not self-combustible and which is composed of collodion guncotton, camphor and a suitable solvent, preferably acetone. The cylinders are then dried and forced into metal cases. In rods so formed any cracks are in a direction at an angle with the length of the rod, and consequently the rods burn slowly and steadily.

rapid erosion of the bore of the gun. C. Claessen [1] adds fenchone to powders of this type, for the purpose of reducing the temperature of combustion, regulating the ratio between the gas pressure and the initial velocity, and increasing the stability of the products.

Moddite [2] introduced by Eley Bros., Ltd., is described by them as an improved, modified cordite. They point out that while Mark 1 Cordite gives satisfactory velocity results in service, it possesses the objectionable characteristics of causing great heat and erosive effects, although extensively used for sporting express cartridges, mainly on account of the fact that it could always be relied upon to readily ignite. Moddite is put forward by the makers as an explosive which combines the virtues of cordite from the viewpoint of sensitiveness to cap ignition, and of modified cordite in the strip form (otherwise known as M.D.S. cordite) in respect to insensitiveness to differences in temperature. Moddite is stated to have the same general composition as cordite and M.D.S. cordite. As compared with ordinary cordite the charges giving standard ballistics in express rifles are nearly 5% less in weight. Thus 57 grains of moddite takes the place of 60 grains of cordite. Just as ordinary cordite may be cut into bundles of strands of a definite length (equal length meaning equal grains weight from the powder loading standard of accuracy) so moddite charges may be cut off without the necessity of making a fine adjustment of the charge by a subsequent weighing process. Moddite is applicable to all bores of military rifles.

Axite [3] a nitroglycerol-containing nitrocotton powder, is somewhat similar in composition to cordite and cordite M.D. It is manufactured by Kynoch Ltd., at Witton, Birmingham, and comes into commerce in a T-shaped ribbon. A high velocity and hence flat trajectory is claimed for this powder, and an almost entire absence of erosive effect on the gun rifling.

U. S. Army Powder Factory is located at Picatinny Arsenal, Dover, N. J., the daily output being approximately 1,000 lb. cannon smokeless powder, and 250 lb. of smokeless powder for small arms per day, although the factory is being enlarged to a capacity of 2,000 lb. cannon and 1,000 lb. small arms powder per eight-hour shift, and equipment is being installed to work daily three shifts in an emergency. "For the construction and successful operation of this plant much credit is due Maj. Odus C. Horney, who has been in command of Picatinny Arsenal since June 1907. . . ."[4] All sizes of cannon smoke-

1. E.P. 11365, 1910.
2. Arms and Expl., 1908, **16**, 18.
3. Arms and Expl., 1905, **13**, 54, in which are specified means taken to diminish erosion of barrel with axite. See also their E.P. 12892, 1905.
4. From Report of the Chief of Ordnance, 1910, p. 38.

less powder are manufactured there, as well as powder for the cal. .30 Magazine Rifle, at a present cost of 39½ cents per lb., to which is to be added the overhead charges for interest, depreciation, etc., which amounts to about 16.4 cents per lb., thus making the total cost 55.9 cents per lb. The powder is a pyro-nitrocellulose of 12.6–12.8% N, colloided with ether-alcohol. One per cent of graphite is incorporated in the .30-cal. powder during mixing or kneading the colloid. It is also coated with graphite just before packing. Otherwise it does not differ in composition from cannon powder. The .30-cal. contains a single longitudinal, central perforation, while the cannon powders contain the usual seven perforations as shown in Fig. 300. Approximately 370,000 lb. of cannon powder and 12,500 lb. of caliber .30 small arms powder were manufactured there during the fiscal year ending June 30, 1910, the employees at the latter date being 324.

Indian Head Powder Factory. The Government Factory at Indian Head, Maryland, commenced the manufacture of nitrocellulose and smokeless powder therefrom in June, 1900. All calibers of cannon powder are produced there; during the fiscal year ending June 30, 1910, 801,284 lb. being made at $0.432 per lb. One pound of new powder requires 0.76 lb. of cotton, 3.99 lb. of mixed acid, and 0.94 lb. alcohol. A complete solvent-recovery plant and acid plant is installed, the nitrocotton being made entirely by the centrifugal method. A cotton found suitable for nitration is the lint that remains on the cottonseed after it leaves the gin. Although a very short fiber, there is a distinct advantage in a short fiber in that it more readily pulps and the nitrating acid is more easily removed. No graphited smokeless powder is prepared at Indian Head.

During 1910, 432,797 lb. of old powder was reworked at a cost of $0.156 per lb., 118 lb. of old powder being required to make 100 lbs. of reworked, due to the loss in purification of the old material. It is proposed to reduce this to 110 lb. The general process of reworking is to grind the powder grains to dust under water by revolving wheels, after which the material is treated as if nitrocellulose. The impurities which tend to lower the heat test are removed by a subsequent series of washings. Reworked powder is not as efficient for guncotton blocks and torpedo work due to the fact that the changed structure of the nitrocotton causes difficulty in proper adhesion when the block is subjected to the final hydraulic pressure. As the nitration is somewhat lowered by age, an average lot will probably run lower in nitration than new powder and need a slightly larger charge.

Indurite,[1] also known as Naval Smokeless Powder, is the inven-

1. See J.A.C.S. 1896, **18**, 834.

tion of Professor C. E. Munroe, and patented [1] by him in 1893. Dried pulped military guncotton was first freed from lower cellulose nitrates by extraction with wood alcohol, as long as an extractive could be obtained. There was thus obtained a residue of higher nitrates in which the lower cellulose nitrates had been eliminated. The highly nitrated cellulose was next gelatinized with mononitro-benzene, in the proportion of about 0.9–1.8 of the former to 1 of the latter, by passing the mass repeatedly through mixing rolls and masticating machinery, whereby it was " colloidized " into a dark translucent mass resembling India rubber. The sheet was stripped off, cut into strips or formed into grains, the granular explosive being immersed in water at 100° in order to volatilize the nitrobenzene, the operation requiring about twelve hours for small grain powder for shoulder arms. As the cellulose nitrate hardened and became indurated (whence its name), the mass became light yellow to gray, and very dense and hard. This physical change in state could be varied within limits by a press designed by the inventor, so that the product could be modified " from a brisant rupturing explosive to a slow-burning propellant."

Maximite, the invention of H. Maxim, has passed through several forms as an explosive, in all of which nitrocellulose has been a leading constituent. In the original product, patented in 1899, a mixture of trinitrocellulose and nitroglycerol was gellatinized by acetone, a small amount of castor oil being added. This is not very dissimilar to original cordite. In 1899 [2] Maxim published his method of powder manufacture, in which nitrated cotton is ground to great fineness under edge rollers, together with 2–15% of resinous matter,[3] the entire mass being finally pressed into blocks of size suitable for use in ordnance.[4]

1. U.S.P. 489684, 1893; E.P. 580, 1893. *Leonard Smokeless*, a nitrocellulose powder manufactured in the United States by M. E. Leonard (U.S.P. 507279, 1893), and composed of nitroglycerol 50, nitrocotton 50, lycopodium 10, and urea 4, was mixed to a uniform paste, forced through dies into strings, and cut into grains. *Peyton powder*, made by the California Powder Company, was similar to Leonard Smokeless, but contained less nitroglycerol and was more brittle. It contained a small amount of ammonium picrate.

2. E.P. 10071, 1899. For waterproofing explosives with celluloid, see F. Tinmel, E.P. 2592, 1903.

3. In his E.P. 16311, 1896, Maxim adds 5–10% gelatin-pyroxylin to trinitrocellulose in combination with a small proportion of nitroglycerol, very little solvent being required provided the mass be united at a suitable temperature, the finished product drying uniformly and without difficulty. He uses 80% nitrocotton of the highest degree of nitration, to which is added 8–10% gelatin-pyroxylin at a temperature of 100–160° F., acetone, equal to about 10% of the weight of the two kinds of nitrocotton being then added. The total acetone employed is stated as 25–30% by weight of the final product. It is next mixed under high temperature and pressure, rolled into sheets, pressed on to a squirting press and formed.

4. The object of the resinous matter is to diminish or prevent erosion, which it does through its richness in carbon. The CO_2 given off, which is the principal erosive chemical, is replaced, according to the patentee, by the less corrosive CO.

In 1903 Hudson Maxim described his method of powder grain formation, in which, in order to obtain better ballistic results, a smokeless powder charge composed of grains of rod-like form is advocated, each provided with longitudinal and lateral perforations, so arranged around a core of quick-burning powder as to give the ballistics desired in the caliber gun used. By means of this form of charge, it is claimed that wave action and irregularity of combustion are obviated.[1] More recently[2] Maxim has devised a nitrocellulose powder intended both as a rifle powder and for blasting purposes. In one form a non-volatile solvent of pyroxylin as trinitroanisol (trinitromethylphenol) is used, this forming by gelatinization a non-fibrous colloid adapted for use as a smokeless powder without drying after granulation. In preparing this smokeless powder, the trinitroanisol and pyroxylin are commingled and thoroughly incorporated between masticating rolls, the latter being hollow for steam connection and maintained at a slightly elevated temperature to facilitate the incorporation of the ingredients and the gelatinization of the pyroxylin, the rolling process being continued until an amorphous colloid results, free from all structure. While still warm the mass is rolled out into sheets of the desired thickness and cut into grains of suitable size and shape, which are then ready for use without further treatment. Sometimes a small amount of solvent of light boiling point is used which is a solvent of both, such as acetone or ethyl acetate, to facilitate the combination, although trinitroanisol is claimed as a powerful solvent of all forms of pyroxylin. The percentages used are 50–40% trinitroanisol to 50–60% pyroxylin [pyronitrocellulose having the composition expressed by the formula $C_{30}H_{38}(NO_2)_{12}O_{25}$].

Maxim-Schüpphaus Powder,[3] although made in several forms, appears chiefly as a cylindrical or square mass of horny nitrocellulose with a number of perforations corresponding to the speed of burning required. The explosive is comprised of guncotton with a small proportion of nitroglycerol, the holes being so arranged that there shall be an ever-increasing burning surface capable of maintaining the uniform pressure desired. The value of the product, therefore, depends upon the capacity of the explosive to burn in layers, and the evidence given by partially consumed granules indicates this is completely carried out. The explosive burns but little on the exterior, due to protection by a coating of varnish, which for the time being inhibits or resists ignition. Some of the perforations are triangular, the object

1. E.P. 9480, 1903.
2. U.S.P. 974900, 1910.
3. Engineering, 1897, **64**, 235, 536; 1898, **65**, 739; Arms and Expl., 1897, **6**, 11. See Hudson Maxim, Jour. Frank. Inst., 1898, **146**, 375, 457.

being to prolong the period to which the progressive burning is carried by postponing the time at which the holes will enlarge until they meet, and so break up the pellet into shapeless grains of explosive. The distinguishing feature of this powder is that it burns slowly at first, when the projectile is moving gently through the bore of the gun, but its rate of combustion increases steadily as the speed of the shot augments, the object being to keep fairly uniform pressure behind the projectile the entire time it is in the barrel. This is attained, as stated, by means of longitudinal perforations of polygonal cross-section in the grain. The Maxim-Schüpphaus torpedo powder; i.e., the grain proposed for throwing high explosives from ordnance, is a cylinder 6 diameters long and longitudinally pierced with 19 angular perforations. The latter are so arranged with respect to one another as to effect the complete consumption of the powder grain simultaneously with the intersection of the perforations with one another.[1]

Bernadou Powder is a smokeless powder patented by J. Bernadou in 1900,[2] and consisting of a gelatinized ether-alcohol, soluble nitrocellulose, possessing a proportionate oxygen content equal to or above that possessed by the ether-alcohol, soluble nitrocellulose corresponding to the formula $C_{30}H_{38}(NO_2)_{12}O_{25}$. It is formed [3] by subjecting pulped nitrocellulose and a colloiding agent to a temperature equal to or below 0°, mechanically agitating and kneading the cooled mixture, forming it into grains and drying.

Explosive D is a nitrocellulose-containing explosive used by the U.S. Government as a bursting charge for projectiles. It was adopted upon the recommendation of Lt. Col. B. W. Dunn, after whom it was named, but its composition and characteristics constitute one of the secrets of the War Department.

Bulk and Condensed Powders.[4] Sporting powders are of two general classes, the loose or bulk powders. In the former the nitrocellulose has been produced in sufficiently light and porous loose granules by mechanical means so that in equal volumes they possess about the same ballistics as bulk powder. On account of a given bulk occupying a larger cubical space, the explosive is rendered applicable for use in shot or sporting guns and for blank cartridges. The dense or con-

1. I.e., when the perforations become so enlarged by interior combustion that their sides become tangent, the grain will be entirely consumed.
2. U.S.P. 652505, 1900.
3. See U.S.P. 652455, 1900, for its method of manufacture.
4. For "Development of Smokeless Rifle Powders," see F. Jones, Arms and Expl., 1905, **13**, 88; for able and impartial article on nitrate ingredients in smokeless powders see Ibid., 1906, **14**, 130; for development of smokeless powders in the U.S. see F. Wileox, Engineering (Lon.), 1898, **71**, 690, 725; also J. Strauss, Proc. U.S. Nav. Inst., 1909, **36**, 929.

densed powders, on the other hand, represent the maximum of propulsive force in the minimum of space, being tough, horny, structureless grains, gelatinized throughout, and prepared in the same manner as the military flake powders. Whereas bulk powders are intentionally given a porosity so that they will just fill a cartridge used in black powder arms, the condensed smokeless powders are designed for the more modern rifles.

The production of condensed powders is very simple, it being only necessary to properly colloid the nitrocellulose with a minimum of solvent, and then roll the plastic into thin sheets, ribbons, or cylinders, which are then cut into leaves, disks, parallelopipeds or tubes of the desired weight and speed of ignition. Bulk powders suitable for shotguns are either produced by incorporating with the nitrocellulose an inert water-soluble material as starch or more usual a metallic nitrate, these afterwards being removed by solution in water, thus leaving a porous grain, or the pure colloid is incorporated with water to increase the bulk to the point of precipitation of the nitrocellulose, the mass being first grained and the moisture then eliminated by slow drying. The grains are often hardened after expulsion of the water or metallic nitrate, by superficially gelatinizing the granules by exposure to the fumes of a solvent, the process being stopped by immersion of the mass in water, in which the solvent is soluble, and from which it is subsequently recovered by distillation.[1] A. Cocking and Kynoch, Ltd.,[2] propose to mix nitrocellullose paste with cold water when a small bulk is desired, but they state that when the temperature of the water is raised, and the nitrocellulose paste prepared with a large bulk of solvent, and granulation affected by mixing the warm water and high-solvent paste, a powder of greatly increased bulk is obtained without difficulty.[3] To form a sporting powder

1. It follows that in making an explosive dense and hard, its susceptibility to detonative influences is lessened, owing to the increased work imposed upon the reaction in overcoming the force of cohesion. Similarly the dilution of an explosive body with one non-explosive lessens its susceptibility to explosive influence owing to the energy required in breaking up and dissipating the foreign body.

2. E.P. 15053, 1904.

3. The viscosity of the paste or "solution," as it is called, is regulated to accord with the temperature of the water or steam, the desired bulk being dependent upon the speed of stirring. The preferred method is to incorporate with a 12.5–13% N nitrocellulose 4–5 times its bulk of acetone, until a uniform solution is obtained of about the consistency of molasses; with a given quantity of this solution double its bulk of water at 65° is used. Just sufficient water to cover the solution is first added and stirring commenced. When the mass is in violent agitation the balance of the water is quickly poured in. Increasing the speed of stirring tends to produce a lighter density in powder and the rate at which the water is added has much to do in determining the size and uniformity of the individual granules. The hotter the water the lighter density the grain with a given viscosity of solution. Decreasing the viscosity tends to the production of grains of less density. The temperature of the water, rate of stirring and viscosity of solution are there-

32 grains of which should occupy the unit measure of 3 drams of black powder they [1] granulate the wet nitrocellulose grains, which are then dried and then rotated in a drum. During revolving the grains are wetted with a weak and incomplete solvent, such as a mixture of alcohol and benzene. When about 120 lb. liquid is added to 100 lb. nitrocellulose grains, five minutes' treatment produces the required density. The mass is then poured into about 250 lb. water at 85° and agitated, the large bulk of water immediately checking the gelatinization without contraction of the granules. The mass is then centrifuged to about 25% moisture. About 2.5 k. potassium nitrate is then either sprayed on the wet powder grains or incorporated with the nitrocellulose before granulation to obtain solid residue after combustion as a lubricant for the rifling. A Luck and C. Nichols,[2] propose sodium nitrate, while G. Wadsworth [3] has patented barium nitrate for the same purpose, while aluminum in fine powder with or without the addition of a small quantity of oil or vaseline has been advocated to coat the grains in order to retard the rate of explosion.[4] Both the condensed and bulk powders are usually dried very quickly, to expel solvent, the latter often by means of steam or by being plunged into boiling water. In either case the solvent is usually recovered by distillation.[5]

If the nitrogen content in nitrocellulose rises above 13%, the ester formed is insoluble in ether-alcohol, and requires a solvent such as

fore adjusted to produce the required bulk of the grain. After precipitating, the liquid is poured off and the powder dried and sifted.

1. A. Cocking & Kynoch, Ltd., E.P. 21779, 1905. See also their E.P. 12892, 1895, for improvements in the regularity in burning of smokeless powders by forming into a modified strip or ribbon form, with ribs to prevent contact of the flat surfaces.

2. E.P. 24136, 1898. C. Dawson-Smith (E.P. 25939, 1905) describes a process for preparing nitrocellulose, high explosives of regulated form and relative weight by the use of gelatinizing solvents which are subsequently removed from the mass, by treatment with hydrocarbon solvents such as benzene, toluene, and paraffin. Nitrocellulose (150 parts) is gelatinized by means of amyl acetate (160 parts), and the paste formed into the required shape. The amyl acetate is then removed by treatment in closed vessels with benzene or alcohol, or a mixture of these liquids, and the explosive, on drying, is obtained in the finished state.

3. U.S.P. 899577, 1908. G. Robrecht (F.P. 364973, 1906) manufactures a smokeless cannon powder by immersing vegetable fiber for a period of twelve hours in a mixture of three volumes of sulphuric acid and one volume of nitric acid, at a temperature of 25°. It is then removed, and allowed to stand for a further period of two hours. The nitrocellulose is then, after washing in water, dissolved in acetone or sulphuric acid, reprecipitated by the addition of water, and formed into powder in the ordinary manner.

4. King's Norton Metal Co., E.P. 28053, 1906.

5. For machine for cutting powder strips, see J. Thompson, U.S.P. 827674, 1906; F.P. 367945, 1906; also F. J. du Pont, U.S.P. 790918, 1905. For machine for cutting bands of powder, see E. I. du Pont de Nemours Co., F.P. 367945, 1906. For construction of buildings for the manufacture and storage of explosives, see O. Guttmann, E.P. 4094, 1909; Z. ges. Schiess-Sprengstoffw., 1910, **5**, 33, 265; J.S.C.I., 1910, **29**, 930; also C. E. Bichel, Z. ges. Schiess-Sprengstoffw., 1910, **5**, 182.

acetone for solution, although the acetone colloid produced lacks that toughness, viscosity and hardness obtained by solution in a suitable solvent and which is necessary to secure a proper and effective powder. However, increase of nitrogen—and oxygen also, since for each atom of nitrogen introduced two atoms of oxygen are incorporated—gives increased eruptive force and hence greater penetration and a flatter trajectory. In order, therefore, to produce a powder of the desirable physical characteristics of the lower nitrogen-containing nitrocellulose where ether-alcohol can be used as the colloiding agent, with the force contained in a high nitrogen-containing guncotton, H. W. Wiley [1] proposes to dissolve the guncotton in acetone to a stiff colloid, likewise the collodion cotton in ether-alcohol. Then by combining these gelatinous colloids in various proportions, all ranges of nitrogen content from 13.75% N downwards may be obtained, of proper physical strength, useful powders for various classes of work resulting.

Sporting Powder. According to Professor Charles E. Munroe:[2]

" The progress in smokeless sporting powder has been characterized by the adoption of a small-grained nitrocellulose powder which is gelatinized and then hardened throughout, in place of the grain that has heretofore been pretty generally in use, which was superficially gelatinized and hardened. The manufacture of such powder is carried on in a stationary vertical vessel of copper, which has cone-shaped ends. Around the lower end is a steam jacket, by which the contents of the vessel may be heated. A rotatable shaft extends downward through a stuffing box in the top of the vessel or still, to a point near its bottom, and carries six arms extending across it, each arm being attached at its central point to the shaft and at points on the shaft about 8 in. apart, and the ends of the arms reach nearly to the wall of the still. Five of the bars are square in cross-section and about 1 in. thick; the sixth bar, which is the upper one, is flattened out so as to form paddles, which slant in the direction of motion of the shaft in such a way as to smooth down the surface of the liquid that is placed in the still.

" An orifice at the bottom of the still having been first closed, the vertical shaft carrying its horizontal stirrers is set in rotation and continued in rotation during the whole of the process at a speed sufficient to maintain the particles of guncotton in mechanical suspension in the water, when the guncotton and water are introduced into the still as hereinafter described.

" Water in which 5% of barium nitrate and 2% of saltpeter have

1. E.P. 13457, 1903; U.S.P. 781926, 1905; abst. J.S.C.I., 1903, **22**, 963.
2. U.S. Census Bull., 92, 1908, p. 84.

been dissolved is then pumped into the still, through a pipe provided for this purpose, until the still has been partly filled. Finely pulped wet guncotton is then thrown into the still through an opening in the side of its upper part, this guncotton not having been as yet subjected to the action of any solvent. More water in which barium nitrate and saltpeter have been dissolved is then pumped into the still until the surface of the liquid in the still is about on a level with the upper stirrer-blades on the vertical shaft. The opening through which the guncotton was inserted is now closed, and a previously formed emulsion of from 25 to 50% of amyl acetate in water containing barium nitrate and saltpeter in solution is pumped into the still.

"The material now begins to granulate and the progress of the granulation is observed by withdrawing a little of the mixture through a small orifice near the bottom of the still. When granulation has been effected throughout the mass, which is within about five minutes after the introduction of the emulsion into the still was begun, steam is turned into the jacket surrounding the lower portion of the still. The heating due to the steam is continued for a period of five or six hours, and during this time the amyl acetate is distilled and passes over, with the vapors from the heated water, into a reservoir, where the water is separated from it.

"After the amyl acetate is thus removed a gate valve in the bottom of the still is opened and the mixture of water and granulated powder is drawn off into a draining tank. After draining it is dried, sized, blended, and packed. The strength and the amount of the emulsion used depend upon the amount and quality of the guncotton; the best proportions are ascertained by experience. The length of time the heating is maintained depends upon the amount of amyl acetate used and the temperature of the steam in the steam jacket.

"The still may measure about 6 ft. 3 in. from its bottom to the upper stirrer-blades and about 5 ft. in diameter in its cylindrical portion. In such a vessel the usual charge of guncotton is 450 lb., to which is added the dust or very small grains from previous granulations, making a total charge of upward of 700 lb. The finished powder is colored to suit the taste of consumers."

Guncotton Dynamite. About 1868 both F. Abel and Trauzl suggested combining nitroglycerol with guncotton in the formation of new explosives. Abel's *glyoxiline*[1] consisting of guncotton and potassium nitrate impregnated with nitroglycerol, while Trauzl combined guncotton 25, nitroglycerol 72–73 and charcoal 2–3 parts. The product was immersed in water for several days after formation, whereby

1. E.P. 3652, 1867.

it absorbed 12–15% of water, but still could be exploded by detonation. It is stated that both these products had continued use until the appearance of gelatin-dynamites, which gradually supplanted them. The dualine of Schultze, which made its appearance in 1868, and consisted of wood nitrocellulose dissolved in nitroglycerol, apparently was but little used.

Blasting Gelatin and Gelatin Dynamite, also spoken of as gelignite, utilize those forms of cellulose nitrate which dissolve in ethyl and amyl acetates and ether-alcohol and known as soluble cotton or collodion cotton, with a nitrogen content of from 11.5–12%. This is the same variety of pyroxylin used in lacquers, imitation leather, waterproofing solutions and the formation of artificial filaments. Blasting gelatin, which is a mixture of cellulose nitrate and nitroglycerol only, is made to-day in practically the same manner as that used by A. Noble, who patented in 1875 the original process, consisting in dissolving collodion cotton in warm nitroglycerol, the mass upon cooling forming a gelatinous, rubber-like product of considerable stability and great explosive force. Blasting gelatin is an opalescent glutinous-like substance, of sp.gr., 1.5–1.6, and generally consists of nitroglycerol 92–93%, the balance being pyroxylin.[1]. The pyroxylin most suitable for gelatin manufacture consists entirely of those nitrates soluble in ether-alcohol, the higher nitrates refusing to dissolve in the warm nitroglycerol, forming insoluble and partially converted nodules which interfere with the stability tests and the uniformity of action. It is therefore essential that gelatins should be practically free from guncotton and unnitrated fibers, the latter being at least not over 0.5%. The pyroxylin should be as finely pulped as for smokeless powder manufacture, the use of a filter screen in the poaching and pulping processes being advisable in order to insure freedom from extraneous matter and unpulped fibers.[2] The pyroxylin used should be dry, for moisture not only is antagonistic to nitroglycerol and causes difficulty in union of the pyroxylin with

1. The normal composition of Austrian blasting gelatin is stated as nitroglycerol 93%, nitrocotton 7%. The Swiss product contains 91% nitroglycerol, 9% nitrocotton, to which is added 1% dried sodium carbonate. In Great Britain the proportions usually employed are 90–91%, to 9–10% soluble guncotton. The explosive of Carl Lamm called *Nitrolite* contains nitrocotton 1–6, nitroglycerol 94–99, and the nitrates of ammonium, sodium or potassium, 50. *Diaspon-gelatin* (F.P. 141345, 1881) was nitroglycerol 92–95%, collodion 4.5–7%, alcohol 0.5–1.5%. For nitrolactose or nitrolactine see M. Sjoberg (F.P. 192683, 1888) and nitrodextrin see Defraiteur (F.P. 282135, 282136, 1899).

2. Passing the pulped nitrocotton through a suction screen, as the "Open Side 'Packer' Suction Screen," of the Sandy Hill Iron Works, Hudson Falls, N. Y., tends to separate the imperfectly pulped fibers, and produce a homogeneous product. See C. Claessen, E.P. 16725, 1906; U.S.P. 909546, 1909; F.P. 410239, 1909. J. Rudeloff and A. and W. Allendorff, D.R.P. 201306, 1906.

it, but the gelatin prepared from moist pyroxylin is prone to exude upon storage and transportation and hence become valueless.[1] In the manufacture of blasting gelatins, the pyroxylin, with moisture content preferably below 0.5%, is mixed in a trough by hand or by especially designed mixing machines[2] with nitroglycerol at about 50°[3]. At

1. It is not customary to eliminate water from nitrocotton intended for blasting gelatin by solvent displacement, but by drying, as explained in Chapter III. After drying, the nitrocotton, even if pulped, is often sifted through a 40-mesh sieve, in order to avoid the possibility of forming granulations in the finished gelatin. All gelatin dynamites, blasting gelatins and gelignites are manufactured in practically the same way, and all from that nitrocotton with highest nitrogen percentage, which will still completely dissolve in ether-alcohol. Although the nitroglycerol and nitrocotton may satisfactorily stand the stability tests separately upon mixing, the gelatin may not do so. A. F. Hargreaves and Curtis & Harvey, Ltd., use potassium chlorate (E.P. 4028, 1904) or sodium chlorate (E.P. 6353, 1904) 78%, with dinitrotoluene 22%, and add to 75 parts of this mixture 25 parts blasting gelatin (nitroglycerol 90%, pyroxylin 10%). C. Bichel (F.P. 325507, 1902) replaces the collodion by glue-gelatin. See F.P. 349992, 1904.

2. Of the many machines devised for mixing gelatins, the following two of late pattern are typical. The H. Auchu cartridge machine (Sprengs. Waffen u. Munition, 1910, 5, No. 8; U.S.P. 833658, 1906) avoids the danger of explosions brought about by the presence of nails or other hard foreign matter in the gelatin, or the packing of the material. In the machine described by him these difficulties are avoided by means of a system of friction wheels, such that any resistance to the free passage of the gelatin dynamite brings about the stopping of the machine, without exerting increased pressure upon the material. On the shaft of the machine a conical friction wheel is arranged, and made fast by means of a wedge. A second conical friction wheel fitting over the first and lined with vulcanized fiber, fastened by means of sunken copper rivets, serves to communicate the motion of the driving gear to the cartridge-forming device. A hand lever enables the amount of friction between the two friction wheels to be adjusted, and upon the machine encountering any resistance in excess of the amount for which the wheels are arranged, the operation of the machine is automatically stopped. As a further precaution against explosion, the machine is provided with a cooling device, by which the packing worm is cooled by water passing through tubes contained within it.

In the gelatin mixing machine of G. Jones (U.S.P. 882114, 1908) the arrangement of the mixers and driving means are so that particles of explosive cannot readily gain access to the movable parts of the driving and lifting means. He raises the mixers by force of gravity controlled by air pressure, and lowers them into the mixing bowl by the same means. The H. Talley mixing machine (U.S.P. 940216, 1909) raises and lowers the bowl hydraulically, the hydraulic pressure sustaining the machine in any position it may assume.

3. Although but little progress has been made in the fundamental methods of explosive gelatin manufacture, considerable work has been done in the prevention of freezing of the compounds, in which state their sensitiveness to shock is greatly increased. As far back as 1866 (Swed. P., Apr. 30, 1866) A. Rodberg patented nitrobenzene as an addition to nitroglycerol, which was re-patented in England by F. Noble (E.P. 5330, 1886). The Société des Poudres et Dynamites, Arendonck, followed with dinitrotoluene (E.P. 14827, 1903). A. Mikolajczak (E.P. 8041, 1904; U.S.P. 798436, 1905; 910936, 1909; 948790, 1910) with dinitroglycerol, while the Westfalisch-Anhalische Sprengstoffe A-G., Berlin (E.P. 4057, 17891, 1906), patented dinitromonochlorhydrin and nitrodichlorhydrin. This firm also discovered that by polymerizing glycerol with conc. sulphuric acid, diglycerol is formed, and by nitrating a mixture of this and glycerol, some dinitro- and tetranitrodiglycerol is obtained (E.P. 4057, 1906) which prevents freezing. The Deutsche Sprengstoff-Ges. advocate monochlordinitroglycerol (E.P. 6314, 1906); Escales (E.P. 21117, 1907) a complex product obtained by nitrating a mixture of chlorhydrins and diglycerols, and the Soc. Anon. d'Explosifs et de Produits Chim. (F.P.

temperatures much below this, gelatinization occurs very slowly and imperfectly, and liability of the finished product to exude under severe climatic conditions increased.

Blasting gelatin is less sensitive to shock than dynamite. Austria, in endeavoring to produce a military explosive practically insensitive to mechanical effects as rifle shots, were led to introduce camphor, and thus form a plastic compound. Their product, which was called "War Blasting Gelatin," was composed of 4% camphor, 9.6% soluble guncotton and the balance nitroglycerol. The Italian formula adopted was camphor 5 parts, pyroxylin 8 parts and nitroglycerol 92 parts. In Austria the use of this gelatin has been discontinued, one reason being the difficulty of detonating the combination. A special primer of 40% pyroxylin and 60% nitroglycerol was used, and even this heavy primer is said to have often missed fire. In Italy pyroxylin primers were used. As blasting gelatin, on account of its power of demolition is used only for extraordinarily heavy work, a less violent combination of blasting gelatin in combination with an absorbent or comparatively inert body is more often used at the present time, and such combinations are known as gelatin dynamite and gelignites. A number of absorbing and inhibiting materials have been proposed from time to time, but for practical purposes wood pulp, either with or without potassium or sodium nitrates, is preferred. Rye flour, burnt ocher, kieselguhr and similar materials are now used but little, if at all.

Among the principal gelatin dynamites and blasting gelatins may be mentioned the following: Gelignite is a blasting gelatin-nitrate-wood pulp of approximately nitroglycerol 62.5%, pyroxylin 2.5%, wood pulp 8.5%, sodium nitrate (dried) 26.2%, and sodium carbonate (dried) 0.3%. If a weaker action is desired, the filler or absorbent is increased and the pyroxylin and nitroglycerol decreased correspondingly. The following table, from Arms and Explosives, 1898, **6**, 173, shows the composition of other gelignites, the parts being by weight:

Name of Gelignite.	Nitroglycerol.	Pyroxylin.	Wood pulp.	Potassium nitrate.	Chalk.
Sun	57–59%	2–3%	8–10%	25–35%	—
Nahnsen's	54–63	3–5	less than 6	26–34	0.5
National	56–64	4–6	5–9	24–32	0.5
British	58–62	3–5	6–9	26–31	—
Kynoch	54–63	3–5	6–10	26–34	—

394492, 1907) nitromethane mixed in proportion of about 10%. J. Luciani (F.P. 326037, 1902, and First Addition dated Dec. 22, 1902,) adds a nitrocotton of high nitrogen per cent, and insoluble in nitroglycerol to prevent freezing, but does not state how he obtains a uniform and homogeneous mixture. These various

Of similar composition are the following: *Celtite,* containing nitroglycerol 56–59, nitrocotton 2–3.5, potassium nitrate 17–21, wood pulp 8–9, ammonium oxalate 11–13, and moisture not to exceed 1.5; *Geloxite,* nitroglycerol 54–64, nitrocotton 4–5, potassium nitrate 13–22, ammonium oxalate 12–15, red ocher 1, wood pulp 4–7; *Phoenix Powder,* nitroglycerol, 28–31, nitrocotton 1, potassium nitrate 30–34, moisture 2–6; *Stowite,* nitroglycerol 58–61, nitrocotton 4.5–5, potassium nitrate 18–20, ammonium oxalate 11–15, wood pulp (moisture between 5–15%) 6–7; (all the above parts by weight); *Forcite,* produced at Lake Hopatcong, N. J., consists of blasting gelatin (nitroglycerol 98, collodion cotton 2) 50 parts, absorbent (sodium nitrate 76, sulphur 3, wood tar 20, wood pulp 1) 50 parts. *Swalite* is a safety gelignite for shaft sinking and hard stone work, manufactured by the Cotton Powder Co., London. *Samsonite* is said to consist of nitroglycerol 57–60%, nitrocotton 3–4%, potassium nitrate 17–19%, wood meal (dried at 100°) 5–7%, moisture 0–1.5%, and ammonium oxalate 12.5–14.5%; *Fördit 1C,* nitroglycerol 24.5, collodion cotton 1, nitrotoluene 34, flour 2, dextrin 2, glycerol 5.5, ammonium nitrate 32, and potassium chloride 30 parts; *Coronite,* nitroglycerol 38–40, nitrocotton 1–1.5, ammonium nitrate 26–28, potassium nitrate 3–5, aluminum stearate 11–14, rye flour 8–11, wood meal 2–4, liquid paraffin 2–4, and moisture not over 2.5 parts. The *Grisoutine* safety explosives have the composition represented in the following table.[1]

	G— old type.	GG— new type.	B— old type.	BG— new type.
	Per cent.	Per cent.	Per cent.	Per cent.
Nitroglycerol	29.10	29.10	11.76	11.76
Nitrocellulose	0.90	0.90	0.24	0.24
Ammonium nitrate	70.00	67.00	88.00	85.00
Kieselguhr	——	3.00	——	3.00

The E. I. du Pont de Nemours Company of Wilmington, Del., place upon the market a line of gelatin dynamites of various strengths and known as *Hercules Gelatin, Repauno Gelatin* and *Forcite.* The Potts Powder Company, Reynolds, Pa., prepare *Rendite,* especially adapted for underground blasting, its desirable qualities being density and freedom from fumes. The Independent Powder Company of Joplin, Mo., place upon the market a series of blasting gelatins, and gelatin dynamites under the general name "Independent." They were

products are readily miscible with the nitroglycerol, especially upon heating the latter to the temperature required to gelatinize with the pyroxylin. For combinations of nitrocellulose, and tetranitrodiglycerol see F. Sparre, U.S.P. 852143, 1907.

1. Dautriche, Z. ges. Schiess-u. Sprengstoffw., 1908, 3, 251.

first manufactured June 1, 1910, at Powder Spur, Mo. That form of cellulose nitrate known in the trade as " soluble nitrocotton for gelatin manufacture," is used, the nitrogen content varying between 11.75–12%. Carbohydrates are recommended in gelatin dynamite explosives, as in the following patented composition.[1] Nitroglycerol 32%, pyroxylin 0.7%, dextrin 15.5%, vegetable oil 1%, ammonium nitrate, 35.8%, ammonium oxalate 3%, wood meal 2%, sodium chloride 2%, and alum 5%. A number of constituents in the above representative formulæ as the carbonates and oxalates have been introduced to lessen the volume of smoke produced, which is of considerable moment, especially, in underground work. Although gelatin dynamite is especially suited for work in places where there is a limited supply of air, as in ore mining, tunnel blasting and all wet work, it must not be inferred that the blasting gelatins are smokeless. There is usually, however, absence of any considerable quantity of objectionable fumes. On account of a greater density as compared with kieselguhr dynamite, gelatin dynamite is more readily loaded in water, which after a time turns the exterior slightly milky, but otherwise does not affect it. It is also more valuable in tunneling and shaft sinking, where a larger quantity of the explosive may be concentrated in the space at the bottom of the bore holes. It is also less sensitive than blasting gelatin, for which detonators of full strength should be used. Gelatin dynamite is not as rapid as ordinary dynamite, and is not as well adapted for " mud-capping." The force of these compounds is in direct proportion to the nitroglycerol and pyroxylin contained therein, especially the former. The usual strength is " 40% strength gelatin dynamite," which indicates a grade equal in explosive force to 40% nitroglycerol dynamite, but does not mean that there is 40% nitroglycerol in the explosive.

Nitrated Guncotton is a term which has been applied to combinations of nitrocellulose with alkali and alkaline earth nitrates, principally those of potassium, ammonium and barium. The nitrates supply sufficient oxygen so that the combustion of the carbon goes entirely into the dioxide and without the formation of the more poisonous monoxide (CO). Often a small amount of metallic aluminum is added to the mixtures to increase their explosive energy.[2] T. Reishoff [3] soaks the guncotton in a saturated aqueous solution of a mixture of nitrates of potassium 4, ammonium 40, barium 1.7, sodium 17, strontium 12.3 and water 25 (all parts by weight). Damp gun-

1. Soc. Dynamit Akt-Ges. vorm. Alfred Nobel et Cie, F.P. 333443, 1903.
2. See E. Steele, U.S.P. 799687, 1905; E.P. 11000, 1904; 4114, 1906.
3. E.P. 10927, 1906. See also H. Wessel, E.P. 2286, 1907.

cotton 40 parts (containing about 15% water) is soaked in 60 parts of the above solution. Lehmann[1] does the converse, i.e. soaks the finely powdered metallic nitrate with nitrocellulose in a volatile solvent, recovers the solvent and presses the mass into forms.

Kynoch's Smokeless is said to contain nitrocotton 52.1, barium nitrate 22.2, potassium nitrate 1.4, dinitrotoluene 19.5, wood pulp 2.7, ash 0.9 and volatile matter 1.2 (parts by weight).

Du Pont Powders. Under this general name are comprised the various smokeless and other powders produced in the United States, at the several factories of the E. I. du Pont de Nemours Powder Company, of Wilmington, Del.[2] They comprise the entire range of bulk and condensed rifle and shotgun powders, this firm having first commenced the manufacture of powder in the United States in 1802, and continually since. The nitrocellulose-containing powders, which nearly all are smokeless, fall naturally into two groups, (*a*) smokeless shotgun powders, and (*b*) smokeless powders for rifles and pistols. Smokeless shotgun powders should under no circumstances be used in rifles, or conversely. The Du Pont smokeless rifle and revolver nitrocellulose powders may be conveniently arranged in the following four groups.

1. For high power rifles, full service load—"Du Pont 1909 Military," "W.A. .30-cal." and "Lightning," all of which are dense powders, in which the maximum of propulsive power is represented by the minimum of weight. Great care should be exercised in their use in loading, since a small error in weight introduces a correspondingly greater error in result, on account of the comparatively small loads required.

2. For black-powder rifles that have been adapted for the use of smokeless powder, "Sharpshooter" and "Unique," which are dense powders, and "Marksman," "Du Pont Rifle Smokeless No. 1," and "Schuetzen Smokeless," which are bulk powders.

1. F.P. 390381, 1908. See E.P. 3937, 1909. For process for preventing spontaneous explosion of nitrated explosives, see J. Bouchaud-Praceiq, F.P. 387612, 1907; E.P. 10129, 1908; D.R.P. 211866, 1908; abst. J.S.C.I., 1908, **27**, 877. G. van Pittius (VI Internat. Cong. Appl. Chem. Rome, **2**, 553; Z. ang. Chem., 1906, **19**, 848) in examining the residue from smokeless powder and its effect on the formation of rust in guns, found that none of the substances contained in the residue from either nitroglycerol powder or nitrocellulose powder is in itself injurious to the gun; but they may become so in presence of moisture. The gun should, therefore, be washed out as soon as possible after use, and where that is not possible, a greasy cleaning-rod should be put through it to keep moisture from the hygroscopic residue.

2. F. Sparre has assigned to this company (U.S.P. 812958, 1906; 850267, 850268, 850325, 1907) various methods for producing ammonium nitrate metallic explosives with ungelatinized nitrocellulose. See also C. Claessen, U.S.P. 979431, 1910; E.P. 11365, 1910; abst. J.S.C.I., 1910, **29**, 1084; E. du Pont, U.S.P. 976211, 1910.

3. Powders for mid-range loads, typified by the dense powders, "Lightning" and "Sharpshooter."

4. Short-range loads, being "Unique" dense powder, and the bulk powder "Marksman."

It should be remembered that bulk smokeless rifle powders like Marksman, Du Pont No. 1, and Schuetzen Smokeless, on account of their porosity and easy-loading qualities, are accompanied by a certain sensitiveness to moisture, as the result of which best results are always obtained with freshly loaded ammunition. Bulk smokeless powders, therefore, should always be kept in a dry atmosphere. On the other hand, dense smokeless powders such as Du Pont 1909 Military, W. A. .30–cal. Military, Lightning, Sharpshooter, Unique and Bullseye, are not so affected by moisture, and cartridges loaded with these powders keep indefinitely without serious deterioration in their shooting qualities.

Of the shotgun powders of Du Pont manufacture may be mentioned Infallible and Ballistite, the former being claimed as the principal dense smokeless powder made in the United States at the present time, and Du Pont Smokeless, Hazard Smokeless, New Schultze, New E. C. Improved, and Empire, all bulk smokeless powders. The principal characteristics of these powders are appended below.

Du Pont 1909 Military is a graphited smokeless powder developed for the U. S. Government Model 1906 ammunition. It is a straight nitrocellulose powder, containing a small amount of graphite for facility of loading, a trace of stabilizer, the nitrocellulose being practically soluble in ether-alcohol and containing about 12.6% N. It is a tubular powder, apparently the same as that previously described, burning with but little residue and with a low temperature, reducing the metallic fouling by nearly 75% as compared with the older powders. The loads recommended for a 150-grain bullet is 47 grains, by weight, and for a 180-grain bullet, 45 grains by weight. It is manufactured at Carney's Point and Haskell's, both New Jersey, and at present is used by the U.S. Government as a service ammunition.

W. A. .30=cal. is a dense smokeless powder for use in high power rifles, with full charge only. It is made by the E. I. du Pont de Nemours Co., at Haskell, N. J., is tubular in form, light gray in color, and adapted primarily for use in the .30–40 cartridges for the U. S. Magazine rifle 1898 model, .30–40 Winchester, and Remington, and also the .30–35 U. S. Magazine rifle, model 1903. Although it may be used in a few other cartridges, it is generally known as the ".30-cal. powder." On account of its slow-burning qualities, it is not suited for use in reduced charges or for shotguns. Full metal-cased bullets

are advised for use with this powder. W. A. .30-cal. is said to be a nitrocellulose-nitroglycerol powder, containing in some forms metallic nitrates and an organic deterrent. The details of its manufacture are said to be quite similar to that of Cordite M. D., the powder being formed into threads, tubes or disks, depending on the ballistics it is desired to impart and the caliber of the gun in which it is intended to be used. This powder was formerly used by the U. S. Government and until the adoption of a straight nitrocellulose powder similar to the Du Pont 1909 Military.

.30-cal. U. S. Army Rifle Powder, as manufactured by the E. I. du Pont de Nemours and other companies is similar in appearance to that described on page 916, as made by the U. S. Army Factory at Picatinny. The circular grains are about 2 mm. long, 0.5 mm. diameter and with a single, central, longitudinal perforation. A machine similar to that shown in Fig. 294, is suitable for their manufacture.

Bullseye, a dense, smokeless powder for revolvers and automatic pistols only, is manufactured at Haskell, N. J. On account of very fine granulation, it is extremely quick burning, and hence requires unusual care in loading in order to obtain dependable results, for the load is so small in bulk that small errors in volume produce a large ratio of error. Such powders would be unsuitable for use in a rifle or shotgun, being too quick burning. This powder may be used with lead, alloy, or metal-cased bullets.

Lightning, a dense, smokeless powder for high-power rifles, made by the Du Pont Powder Company, at Haskell, N. J., is tubular in form, and of the same general appearance as "W. A. .30-cal." except that it is of finer grain, and hence burns more quickly. It is adapted for use in certain high power rifles in which "W. A. .30-cal." is unsuitable, being especially effective in the .30–30, 7 mm., .303 and cartridges of a similar type. The .303 Savage requires a 26-grain load and the .303 British a 28-grain load for greatest effectiveness, full metal-cased bullets being used in all instances. In certain cartridges it works satisfactorily as a mid-range load, in which a lead bullet with a copper cap on the base may be employed. The .30–40, and .30–45 U. S. Government cartridges require a 23-grain load by weight. Lightning is not only quicker burning than W. A. .30-cal., but better adapted to bullets with shorter bearing surface, full metal-cased bullets being necessary with full loads to avoid stripping.

Sharpshooter and **Unique** are both dense smokeless powders, intended for black-powder rifles adapted for use with smokeless powders. Sharpshooter has quicker burning properties than either W. A.

.30-cal. or Lightning, and is especially designed to be substituted for black powder in black-powder cartridges over .32-cal. Sharpshooter is tubular in form and rather finely cut for a tubular powder. Unique differs from Sharpshooter only in being cut finer, and in the form of disks, which give increased speed of burning, and is applicable for black-powder cartridges of less than .32-cal., especially where the bullet has a short bearing surface. The powder, on account of its very quick burning qualities, must be used in small charges only. Sharpshooter works to best advantage in a straight shell-cartridge with large powder space, and a bullet with fairly long bearing surface. When used in high velocity cartridges, the cartridge should always have a straight shell. Either alloy, half-mantled or bullets with copper cup on base can be used. The quick speed of burning results from the composition and form of the grain.

Marksman is a gray, granular, bulk, smokeless, rifle powder, first made in the U. S. at Oakland, N. J., and at present produced at Carney's Point, N. J. It gives better results in bottle neck than in straight shells, on account of the resistance required to obtain uniform burning, alloy or lead bullets being recommended. It is used primarily in black-powder rifles adapted for use with smokeless powders, and in reduced loads in high-power rifles with lead bullets.

Du Pont No. 1 Rifle Smokeless is a bulk powder, of slightly larger granulation than "Marksman," and intended to be substituted for black powder where it is desired to load "bulk for bulk," one grain by weight of this powder being approximately equal to two grains by measure of a standard black rifle powder. It appears as light gray granules, and is manufactured at Carney's Point, N. J.

Schuetzen Rifle is a smokeless bulk powder, for black-powder rifles adapted for use with smokeless powders, and has the same or a somewhat greater initial velocity than black powder, at the same time generating less pressure. It is made at Carney's Point, N. J. The gases produced upon firing being alkaline, and the residue left in the barrel slight, there is but little pitting of the rifling. This powder is designed to be used in Schuetzen rifles with the same method of loading as black powder, and being of medium granulation, is intended especially for those that load their shells at the firing point. Bullets containing 4 parts tin to 100 parts of lead should be used.[1] This powder,

1. When using lead bullets with smokeless powder, or lead and tin bullets without metal jackets, it is of importance that the bullets be of sufficient diameter to fit to the bottom of the rifling. For this reason powders of the Schuetzen Smokeless type are not adapted for those barrels in which the bullet is loaded from the muzzle; but muzzle-loading barrels may be converted into breech loaders with satisfactory results by merely using a tight-fitting bullet. If the bullet pushes in too hard, the barrel may be throated to receive it.

which appears in orange-colored granules, is sensitive to moisture, and any lack of velocity shown may be restored by spreading the powder out in a thin layer in a warm, dry place.

Infallible Smokeless, made at Haskell, N. J., is a dense shotgun powder which must not be used in rifles or revolvers. It consists of fine, dark gray disks, about 1 mm. diameter and 0.1 mm. thick, 24 grains of which are equivalent in strength to 3 drams black powder, or "bulk" smokeless powder. On account of its composition, Infallible Smokeless is unaffected by amotspheric extremes, shoots with high velocity, will not properly ignite with black powder priniers on account of their insufficient flame, and is claimed to give a better and more even pattern than other dense shotgun powders. Being composed of such smooth and small disks, the powder flows readily and smoothly through an ammunition loading machine, thus insuring accurate loading and consequent uniformity and regularity of results. The 24-grain and 25-grain loads are recommended for field or trap shooting.

Ballistite Smokeless Shotgun Powder, as prepared by the du Pont Co., at Haskell, N. J., belongs to the class of concentrated or dense powders and appears in the form of small square tablets or flakes, having a consistency similar to celluloid. The finished powder is treated with graphite, which gives the surface of the grain a semi-metallic appearance. Owing to the colloidal nature of ballistite, it is practically unaffected by moisture or age. Whereas one avoirdupois pound of black powder will load 85 "three-dram loads," $4\frac{2}{3}$ oz. of ballistite smokeless will also load 85 shells with "24-grain loads," i.e., 24 grains is equivalent to a "three-dram load" of black powder.

Du Pont Smokeless is a bulk shotgun powder, made at Carney's Point, N. J., and consists of small, grayish-white granules, resembling in appearance powdered or granulated bleached shellac. It apparently is a straight nitrocellulose powder containing no graphite. The hard and porous nature of the grain is said to be due entirely to the process of manufacture, and not to after treatment. This characteristic insures quick ignition, and rapid and maximum combustion of the powder charge. It gives a very high velocity, and hence superior penetration. The recommended load for 12-gauge guns are $2\frac{3}{4}$ to $3\frac{1}{4}$ drams by measure, put in the shell with 25–30 lb. pressure, and $1\frac{1}{8}$ to $1\frac{1}{4}$ oz. of shot.

Hazard Shotgun Smokeless, whose manufacture has now been discontinued, is a small brick-red grain bulk nitrocellulose powder.

E. C. Improved Shotgun Smokeless is an orange-colored, bulk nitrocellulose powder of medium granulation, first made in the United States at Oakland, N. J., but now produced at Carney's Point, N. J.

It must be loaded by measure and not by weight and must not be used in rifles or revolvers.

New Schultze manufactured at the American E. C. & Schultze Works, Oakland, N. J., and at the Carney's Point Works of the Du Pont Company, is a hard grain smokeless bulk shotgun powder. The grains are very fine, dense, hard and nearly white, the best loads adapted for 12-gauge guns being $2\frac{3}{4}$ to $3\frac{1}{2}$ drams by measure. The grain of this powder is so fine that it burns without residue, hence there are no unburned particles to blow back into the gunner's eyes. On account of the hardness of the grains, slight variations from the 30-lb. pressure recommended in loading the powder in shells, does not materially influence the shooting. "New E. C. (Improved)," also a bulk smokeless, nitrocellulose shotgun powder, is similar to New Schultze.

Empire Smokeless Shotgun Powder is a dark gray granular bulk powder, the grains being approximately spherical in shape. The composition is such as to insure freedom from blow-back and much alkaline residue in the barrel. It somewhat resembles Schultze Powder.

In 12-gauge guns the loads run from $2\frac{1}{2}$ to $3\frac{1}{4}$ drams. It is manufactured at Carney's Point, N. J.

King's Semi-Smokeless Powder is manufactured by the King Powder Co., under the supervision of its inventor, Milton F. Lindsley, at King's Mills, Ohio. This powder contains 20% of a nitrocellulose prepared by nitrating wood fiber, and contains about 11.5% N. This powder resembles black powder in its physical appearance, is made by black powder machinery, and glazed the same as ordinary black powder. It has been manufactured for the past fifteen years, and comes into commerce in the five sizes, FFFFG, FFFG, FFG, FG, and CG; F, C, and G, denoting Fine, Coarse, and Grain respectively. The variation in size of grain is said to be produced by sifting through various mesh sieves, the finest (FFFFG) being used for 22-cal. and other small caliber arms, FFFG and FFG being best adapted to shotguns. It is a bulk powder, the best results being obtained by an ordinary primer such as is used for firing black powder.

Recently (April 5, 1910) a patent[1] has been granted to G. Peters and M. F. Lindsley for a nitrocellulose containing safety powder for blasting, the inventor's preferred formula being: Ammonium nitrate 75%, nitrated wood fiber 20%, nitrobenzol 4%, and asphalt 1%, all incorporated to a homogeneous mass. After incorporation the material is packed in various sized waterproof paper tubes and hermetically sealed. Nitrocellulose made from wood fiber, it will be remembered,

1. U.S.P. 953798, 1910.

always gives a higher ash, than when cotton is taken as the source of cellulose.

Lesmok is a bulk rifle and shotgun powder manufactured by the E. I du Pont de Nemours Co., of Wilmington, Del., and is the culmination of an exhaustive series of experiments looking to the production of a powder best suited for .22-caliber cartridges. This powder, which is black in color from contained charcoal, contains from 10–20% nitrocellulose, and produces less smoke (**less smoke**) than similar powders, whence it derives its name. The manufacturers call attention to observations made with small bore rifles as .22-cal., in which the best results are obtained from a powder that leaves a soft, moist, non-acid residue, and but little of it, which residue should not cake in the rifling, so as to impair the accuracy of shooting. Their study showed that the residue apparently acted beneficially when it was not too great in amount; when it was soft, moist, and greasy; and when it did not cake in the grooves or burn into the barrel. It was also demonstrated that powders showing opposite characteristics to these, even when not sufficiently pronounced to prevent their successful use in rifles of larger caliber, give poor results in the .22.

This, then, is the general principle upon which Lesmok has been formulated. As illustrating to what extent the residue has been diminished and modified as to ability for use in the breech-adapters with the .22 Springfield U. S. Government rifle, it is recalled that black-powder cartridges soon foul the adapters to such an extent that they are useless until cleaned, whereas but little difficulty is experienced in this direction with Lesmok powder. The .22 Springfield, with its breech-adapters, imposes a severe test upon the cleanliness of a powder.

The Gentieu and Waddell Method of Smokeless Powder Manufacture.[1] In carrying this process into effect the pulped nitro-

1. G. Gentieu and R. Waddell, U.S.P. 806131, 1905. In Fig. 309, *A* represents the tank, provided with manholes at top and bottom, closed by covers *H*, *H'*, for the introduction and removal of the nitrocellulose. A hollow shaft *B* passes through the tank and is provided with a series of radial agitating arms *C*, which are hollow and communicate with the interior of the shaft, being preferably arranged spirally as shown. A stationary compressed-air pipe *E* fits into the hollow axle *B*, the pipe being provided on its lower side with a series of air ports *J*, which supply air to the stirrers *C*, so that the compressed air is supplied to the material in the bottom of the tank and must force its way into and through the material to escape. The solvent is introduced by means of the pipe *F*, and steam admitted to the jacket *d* by a pipe *d'*. The solvent passes through an exhaust pipe *G* and is condensed. After the excess of solvent has been removed, the grains are ready to be sieved and dried. W. Williams (U.S.P. 825168, 1906) colloids nitrocellulose by immersing the grains in a solution of mononitronaphthalene in a relatively volatile liquid until they soften, when they are removed, dried first by exposure to the atmosphere, and then at a temperature of 40–50°. See G. Wadsworth, U.S.P. 899577, 1908; E.P. 16492, 1907; abst. J.S.C.I., 1908, **27**, 297.

cellulose after successfully passing the required heat tests, and the surplus moisture removed centrifugally, is placed in a suitable vessel (Fig. 309) and treated with compressed air, perferably introduced into the bottom of the container in fine jets, the nitrocellulose being further agitated, if desired, by means of a stirring device. In this manner the particles are uniformly subjected to the action of the compressed air, the effect being to break up the pulped material into porous grains, which are then subjected to colloiding solvents, in proportions to produce a retarded colloiding effect. This is best accomplished, the patentees claim, by mingling the solvent with the compressed

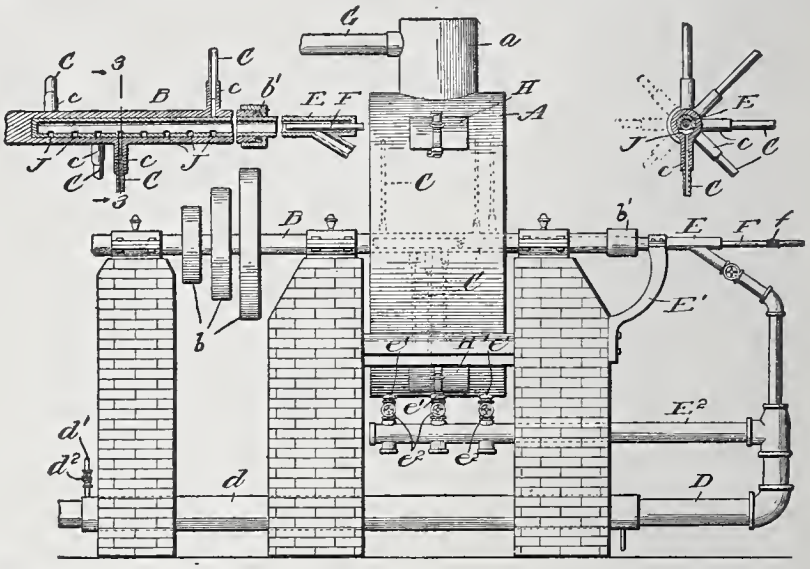

FIG. 309.—The Gentieu and Waddell Process of Smokeless Powder Manufacture.

air, which is introduced gradually and in the form of a vapor, stirring being continued. The pressure tends to drive the solvent into the grains, thus producing the desired effect with the minimum of liquid, while the stirring lifts and distributes the particles so that the solvent can be evenly and uniformly sprayed over all portions of the mass by the compressed air. The thorough penetration of the grains produces a finished product, it is claimed, of the requisite density for smokeless

In the manufacture of smokeless powders according to the process of V. Vender (F.P. 405822, 1909; U.S.P. 946294, 1910) the incorporation of hydrated magnesium carbonate or of manganese peroxide with the usual ingredients is claimed. It is stated that since these substances are decomposed at a relatively low temperature with a considerable absorption of heat and development of gases, they yield a stable powder with a very low temperature of explosion, and that the gases evolved prevent the blowing back of the flame, by diluting or burning the carbon monoxide produced in the explosion. A suitable mixture is composed of 60 k. of nitrocellulose, 28 k. of nitroglycerol and 12 k. of hydrated magnesium carbonate, gelatinized by acetone and molded in the ordinary way.

powder for use in rifles and shotguns. After proper penetration, the compressed air is heated to 40–43°, and its action continued until the grains are sufficiently dry not to stick together. The pressure is then reduced, the colloided powder taken out, placed in trays and the drying completed in the usual manner.

Amberite is a nitrocellulose powder patented by Curtis & Andre in 1891,[1] and manufactured by Curtis & Harvey, at Kent, England. It is an orange-colored sporting powder composed of nitrocellulose, potassium and barium nitrates, paraffin and a small amount of volatile matter. The grains are hard and will stand rough usage without crumbling. The recommended charge for a 12-gauge gun is 40–42 grains by weight to a $1\frac{1}{16}$ oz. load of shot. *Cannonite* or *canonite* patented in 1889,[2] is produced by the same firm, and according to Dr. Dupré consists of nitrocellulose and graphite 86, potassium nitrate 6.88, resin 6.19 and moisture 0.93. Amberite, cannonite [3] and *ruby powder*, have, in general, the same general characteristics and applications. The composition of amberite is stated as nitrocotton 71, potassium nitrate 1.3, barium nitrate 18.6, wood pulp 1.4, and vaseline 5.8, while the constituents of cannonite is given as nitrocotton 86.4, barium nitrate 5.7, vaseline 2.9, carbon 1.3, potassium ferrocyanide 2.4, and volatile matter 1.3.

E. C. Powder was patented in 1882 [4] by Reid and Johnston, and so called from the Explosives Company where it was first made. Originally the patentees grained the pulped nitrocellulose by tumbling in barrels with the introduction of water in a spray. The grains, after drying, were colloided by moistening with 50–75% ether, the latter recovered, and the grains passed through a sieve of the desired mesh. The powder grains were colored reddish yellow by the addition of a small amount of aurine (rosolic acid) dissolved in the ether used for colloiding. P. Gerald Sanford [5] states that "it is now and has been since 1897 what is known as a 33-grain powder, that is to say, the old standard charge of 3 drams by measure for a 12-bore gun weighs 33 grains as compared with 42 grains for the original E. C. and other nitro powders. This improvement was effected by a reduction of the barium nitrate and the use of nitrocellulose of a higher degree of nitration, and also more gelatinization in manufacture. The granules are

1. E.P. 11383, 1891.
2. E.P. 1115, 1889.
3. See Arms and Expl., 1898, 6, 54.
4. F.P. 147325, 1882.
5. "Nitroexplosives," 1906, 186, and having formerly been resident chemist at the Stowmarket Works of this company, this author undoubtedly speaks authoritatively.

very hard, and resist moisture to an extent hitherto unattainable by any ' bulk ' powder.

" Irregularities of pressure in loading have also a minimum effect by reason of the hardness of the grains. The coloring matter used is aurine, and the small quantity of nitrate used is the barium salt. The powder is standardized for pressure velocity with Boulengé chronograph, pattern and gravimetric density by elaborate daily tests, and is continually subjected to severe trials for stability under various conditions of storage, the result being that it may be kept for what in practice amount to indefinite periods of time, either in cartridges or in bulk, without any alteration being feared. The E. C. powders are used in sporting guns. No. 1 and No. 2 E.C. are not at present manufactured, E.C. No. 3 having taken their place entirely. Since 1890 these powders have been manufactured under the Borland-Johnson patents, these improved powders being for some time known as the J.B. powders. The E.C. No. 1 was superseded by the E.C. No. 2, made under the Borland-Johnson patents, and this in its turn by the E.C. No. 3 (in 1897)." The latter is a 33-grain smokeless powder giving low recoil and especially adapted for efficiently propelling the lighter shot charges.[1]

Smokeless Diamond or **Diamond Smokeless,** is a dense, nitrocellulose, shotgun powder of the 33-grain type, i.e., the weight stated (33 grains) is the standard for a 12-gauge shotgun cartridge, and equivalent bulk for bulk of 3 drams of black powder. Invented by H. Chapman, it is produced by Curtis & Harvey at their Tonbridge works. It is claimed that on account of the physical structure of this powder, it is unusually rapid in action.

Rifleite[2] is said to consist of a mixture of dinitrocellulose and trinitrocellulose with the addition of a small amount of dinitrobenzene, gelatinized with acetone, rolled into sheets and cut into grains.

J. B. Powder, invented by Judson & Borland, after whom it was named,[3] is a combination of lower nitrated celluloses with potassium and barium nitrates, in which they took nitrocellulose 50, potassium nitrate 40, barium nitrate 40, and carbonized starch 10 parts. In another formula 1% ultramarine was added. The nitrocellulose was wetted with water to decrease its inflammability, the nitrates

1. For " Improved E. C. Powder," see Arms and Expl., 1897, 6, 36.

2. Arms and Expl., 1900, 8, 19, 21, 50, 69, 82. For a guncotton explosive called *Bellenite* see Arms and Expl., 1900, 8, 186. For " SS," a bulk smokeless sporting powder manufactured by the Smokeless Powder & Ammunition Co., Ltd., see Arms and Expl., 1898, 6, 178. For history of this firm see D. Grant, Ibid., 1896, 5, 19. Their " Smokeless SS Sporting," nitrocellulose powder for shotguns was placed on the market in 1890.

3. E.P. 8951, 1885.

then added, and granulated either by passing through a sieve or by tumbling in a revolving drum. In one modification [1] the mass was moistened with a benzene solution of camphor in insufficient amounts to gelatinize the nitrocellulose; the powder was granulated and dried in the usual manner. The finished powder consisted of fairly hard, uniform, silvery gray grains, at one time used as a sporting powder.

Tonite or "cotton powder," patented in 1874 by Trench, Faure and Mackie,[2] consists of finely comminuted guncotton mixed with recrystallized and finely ground barium nitrate, the proportions being about 51 to 49.[3] It is manufactured at the Faversham and Melling Works of the Cotton Powder Company, and by the Tonite Powder Company of San Francisco. According to Arms and Explosives, 1910, **18,** 138, from 12–15 tons are annually manufactured in Belgium, of a composition of nitrocellulose 54%, potassium nitrate 42% and barium nitrate 4%. Tonite No. 2, which is of a gray color, comprises guncotton, sodium and potassium nitrates, sulphur and charcoal. Tonite No. 3 consists of guncotton 15–19%, *meta*-dinitrobenzene 13%, and barium nitrate 72–68%. It is of a yellowish color, slower in action than Tonite No. 1, and is more useful for disintegrating soft rock. Its manufacture dates from 1889.

Tonite finds extensive use in submarine blasting and torpedoes, and was used in the construction of the Manchester Ship Canal. The large amount of barium nitrate therein makes this explosive heavy and very dense, it being exploded by means of a detonator. Containing sufficient oxygen in nitrate form to combine with the liberated carbon, but little carbon monoxide (CO) is formed in its detonation, which renders it a safe explosive to use.

Saxonite, produced by the Ardeer Works of Nobel's Explosives Company, Ltd., is said to consist of nitrocellulose 3.5–5.5, nitroglycerol, 58–62, potassium nitrate 25.5–30.5, chalk 0.5, ammonium nitrate 14–27, and moist wood pulp 11-23 parts. According to the 1907 report of the Inspectors of Explosives, out of 7,764,122 lb., permitted explosives consumed 22.18% was saxonite, and of 7,998,662 lb. used in 1908, 1,780,888 lb. was saxonite.

1. Borland, E.P. 6289, 1896; 4593, 1901.

2. E.P. 3612, 1874. Tonite Nos. 2 and 3 were patented by Trench alone. *Potentite* is similar to tonite except the barium nitrate is replaced by potassium nitrate, the formula being guncotton 62.2, potassium nitrate 33.8. It is compressed into cartridges before use. Clermonite and Empire Powder are stated to be similar.

3. The purified and pulped guncotton is intimately mixed with the barium nitrate, both in the wet state by means of edge runners, the mixing continued until neither constituent can be detected in the mixture. The paste is then compressed into cartridges without further treatment, which are finally rendered waterproof by coating with paraffin.

Oarite, invented by Trench, is said to consist of nitrocellulose 10, nitroglycerol 20, dinitrobenzene 10, and barium and potassium nitrates, 60 (parts by weight).

Henrite is a smokeless nitrocellulose powder of the 33-grain class, manufactured by the Henrite Explosives, Ltd., Dartford, Kent. *Neonite, Red Star* and *Felixite* are smokeless powders made by the New Explosives Company, Ltd., London.

French Powders. *Poudre B.*[1] or *Poudre Vieille,* is the original powder produced by Vieille in 1886, this being the first entirely gelatinized military powder adopted by the Service. It was intended especially for use in the Lebel rifle, and known as the Lebel powder. As analyzed by Lieut. Wisser, U.S.N., it was found to contain insoluble nitrocellulose 68.2, soluble nitrocellulose 29.79, and paraffin 2 (parts by weight). The present French service powder "B" is a pure nitrocellulose powder, gelatinized with a mixture of alcohol and ether, amyl alcohol being added in certain circumstances as a stabilizer.[2] *Poudre BN* is similar, except for the presence of barium or potassium nitrate.[3]

Poudre J, which was invented by Bruneau, is said to consist of guncotton 83, and ammonium bichromate 17 parts. The details of manufacture have not been disclosed, but apparently are similar to that of *poudre pyroxylèe.* The powder is made in four sizes, i.e., No. 0 for rifles and carbines, No. 1 and 2 for general hunting purposes, and No. 3 for smaller caliber arms, as pistols and revolvers.[4] The moisture in the powder as sold averages about 3%. *Celluloidine* or *poudre celluloique,*[5] patented by Turpin in 1888, comprised pulped

1. Named after General Boulanger.

2. The powders are classified as Poudre B, containing no amyl alcohol, Poudre B, AM_2 eontaining 2%, and Poudre B, AM_8, containing 8% amyl alcohol. For heat tests of Poudre B, see L. Lheure, Mem. des Poudres et Salpêtres, 1909–1910, **15**, 1; M. Patart, Ibid., 39. The French BN for field guns appears in strips 3 in. long, 0.05 in. thiek, striated with lines, so that it may be broken in width as desired. The color is light gray For large guns, the strips are 5.5 in. long and 2 in. wide and about 1 in. thick, the strips being of a dull yellow color. Both are hard but brittle.

3. The materials are either mixed in incorporating mills with the minimum amount of water, or better the nitrates are dissolved in water to saturation, carefully clarified by filtration, and the filtered solution added to the nitrocellulose in a mixing maehine, being afterwards pressed through a 10-mesh sieve, and dried artificially to a minimum of 1% moisture. After drying, 25% ether is added to the mixture, and the paste thus obtained granulated on a 15-mesh sheet zinc sieve, the mixture of grains and dust being dried and then sifted into prescribed sizes. The finished product is a light yellow granular powder, of which 2150–2300 are required to weigh a gram.

4. The following table gives the constants of the four sizes:

	No. 0	1	2	3
Number of grains per gm	300	600	1250	2000
Gravimetric density	0.74	0.71	0.68	0.53
Sp.gr	1.62	1.59	1.56	1.435

5. F P. 189398, 1888.

nitrocotton saturated with ether or ethyl acetate. The colloid is passed through powder-cutting machines, and cut into cubes, a portion of the ether being recovered by refrigeration..

According to Arms and Explosives, 1907, **15**, 50, the following are the French shotgun smokeless powders: *J. Powder*, composed of nitrocellulose 83%, ammonium bichromate 14%, potassium bichromate 3%, this being a style of powder in which there is no equivalent in the United States, or England. *T. Powder* is a gelatinized flake powder, manufactured from nitrocellulose only of the highest degree of nitration, and presumably gelatinized by means of acetone. *Cooppal II*, and *Shotgun Rifleite* are similar. *M. Powder* is composed of nitrocellulose 71%, barium nitrate 20%, potassium nitrate 5%, camphor 3%, gelose 1%, and somewhat similar to the English .33-cal. powders. *S. Powder* is an equivalent of the English 42-grain powders and the U. S. Sporting Powders, and contains nitrocellulose 65%, barium nitrate 29%, and potassium nitrate 36%.

Walsrode Powders. Wolff & Co. of Walsrode, prepare a line of flake and granulated smokeless powders, especially adapted for the shotgun. They are made by mixing nitrocellulose of around 13% N with ethyl acetate (acetic ether) to a colloid mass, which is rendered perfectly homogeneous by mastication in a kneading machine, similar to those described and illustrated in Chapter XIV, under conversion of pyroxylin into plastic. Hot water is then introduced into the mass, and finally steam in order to dissipate the solvent and form the nitrocellulose into a grain of the desired porosity. The grains are centrifugally dehydrated, dried at a temperature below 45°, and finally sifted.

Troisdorf Powder is a pure nitrocellulose powder in flake form or nitrocellulose with small amounts of metallic nitrates. As manufactured by the Chilworth Gunpowder Company, Ltd., it is known as Chilworth Smokeless Sporting Powder. Troisdorf powder usually contains a small amount of graphite as a lubricant for the gun bore. The nitrocellulose, which contains about 12% N, is completely soluble in ether-alcohol, and is rolled into sheets and cut into grains 0.1 in. square and 0.04 in. thick.

Wetteren Powder (L. 3, Libbrecht's Powder) prepared at the Royal Gunpowder Factory at Wetteren for use in the Belgian Service, was originally a combination of nitrated paper pulp with nitroglycerol, amyl acetate being used as a solvent and stabilizer. Afterwards the nitroglycerol was discontinued but amyl acetate retained. The composition of the Wetteren Smokeless Military Powder has been stated as nitrocellulose (soluble) 48.15, guncotton 30.73, charcoal

12.12, volatile matter 8.22, and humus 0.77 (all parts by weight).

Von Förster Powder is a dense, pure nitrocellulose flake powder, the nitrocotton being entirely gelatinized, some forms containing a small amount of sodium bicarbonate or elutriated chalk as an antacid.

Cibalite, invented by J. von Falkenstein, is a nitrocellulose powder made in Germany.

Mullerite No. 1 and 2,[1] manufactured by Müller & Co., of Liège, are light green, throughly gelatinized nitrocellulose powders, which are of the "condensed" type, as distinguished from "bulk" nitros which load volume for volume equally with black powder. No. 1 is granulated in the leaflet form, while No. 2 is formed into small grains, uniform but hard. They both give high velocities, but with quite high pressures. Exposure for 120 hours to a damp atmosphere caused No. 1 to absorb 2.67% moisture, and No. 2, 2.5%—a high absorption. They also combine nitrocellulose and metallic nitrates, into a smokeless powder called *Clermonite.*

Cooppal Powder is rather the name of a class of powders manufactured by the Belgian firm of Cooppal & Co., in which nitrocotton or nitrojute is gelatinized with a solvent, with or without metallic nitrates. One form, especially suited for the Hotchkiss gun, and coming into commerce in 3 mm. cubes, is said to be composed of nitrocellulose 71, barium nitrate 24, resinous material 4 and moisture 1. The sporting powders are colored gray, orange, etc., by aniline dyestuffs. "C.L. Powder," made by the same firm, is similar. *Flammivore,* patented by A. Leroux in 1887, consists of collodion cotton 10, ammonium nitrate 85 and ammonium sulphate 5. Nitrojute is said to enter largely into the Cooppal smokeless powders.

Matagnite, so called from the place of its manufacture (Matagnela-Grande, Belgium) appears in commerce in two forms, *Matagnite gelatin,* composed of nitrocellulose and nitroglycerol with sufficient of an absorber to insure against exudation, and *Blasting matagnite,* composed of nitrocellulose, nitroglycerol and nitrobenzene.

"Normal" Smokeless Powder, invented by E. Schenker, and which has been used for some years in the Swiss army, is produced by the Swedish Powder Manufacturing Company, Landskrona, Sweden, being composed of nitrocellulose gelatinized by amyl acetate. The powder is said to be very stable, ignites readily, is very light (sp.gr. 0.75–0.79), not readily sensitive to shock or friction, and has excellent keeping qualities—a sample stored 3.5 years giving as good results as when first made. It is made in four forms. For small

1. Arms and Explosives, 1899, 7, 84, 140; Field, Apr. 22, 1899.

arms the grains are cubical, and about 1 mgm. in weight; for field guns it is used in the form of yellow cylindroids of a diameter of 0.8–0.9 mm. Whereas 100 rounds of a nitroglycerol powder fired in eighteen minutes raised the temperature of the gun barrel 240°, the same number of rounds of normal powder fired under similar conditions produced a rise of but 140°. Eight hundred rounds fired in a rifle did not produce noticeable erosion of the rifling.

Japanese Smokeless Powder for field guns is stated [1] to consist of a mixture of about 40% of a collodion-pyroxylin containing 11% N, and 60% of an insoluble pyroxylin containing 13.4% N. The powder for mountain-guns contains somewhat more of the collodion-pyroxylin.

Guncotton Blocks. In the working up of finished guncotton into blocks and disks for use in torpedo tubes, submarine mines and warheads, guncotton of a predetermined density and definite moisture content is used in large quantities. As it comes from the poacher or centrifugal, the guncotton usually contains from 20–30% moisture, which amount cannot be further reduced except by drying or hydraulic pressure. The formation of large-sized (up to 500 lb.) blocks of guncotton is due to A. Hollings,[2] who in 1898 described methods and apparatus for compressing the moist explosive into submarine mine charges of 450–500 lb. Previous to this, large charges had been formed by building up a single block of disks not greater than 2 in. in diameter and weighing not over 9 lb. each.[3] In the Hollings hydraulic press

1. A. Saposhnikoff, Z. ges. Schiess- u. Sprengstoffw., 1906, **1**, 69; Chem. Centr., 1906, **1**, 1196.

2. E.P. 19806, 1898; 23449, 1899.

3. Sanford (Nitro-explosives, 1906, 69) has pointed out that the following are the advantages claimed for the process: (1) There is no waste space as with built-up segmental torpedoes, through imperfect contact between the individual segments, resulting in about 15% more guncotton being placed in a given space, or a correspondingly less space be occupied by a charge of a given weight. (2) The metallic cases for one-piece charges may be much thinner and hence lighter than those of built up segments, since with the former their function is simply to hold in place a single block and to prevent the loss of moisture from wet guncotton or the absorption of moisture from the guncotton in the dry state. As the solid charge inside will prevent deformation during transport, the outer protecting shell may be made lighter. On the other hand with built-up charges, in addition to the case being strong enough to prevent damage either to itself or to the explosive within, it must be sufficiently rigid and close fitting to prevent shifting in any manner of the segments, thus altering the center of gravity of the charge, and hence its declination and direction when traveling long distances submerged. (3) The uniform density of charges made by the Hollings process is favorable to the complete and effective detonation of the entire mass, and to the presence of the uniform moisture content uniformly throughout the charge. (4) Any desired density from the maximum downwards is obtainable by varying the pressure, and any required amount of moisture left in the mass. In those torpedoes which like the Whitehead and others, their value depends in a great measure upon the accuracy with which their course may be directed, sometimes submerged for a distance of a mile, and the nicety with which their predetermined longitudinal and vertical gravity is calculated

the guncotton is placed in a container fixed at an angle with the press, the charge being pushed into the mold with a rammer, which is then swiveled back to the original position.[1] The damp mass is subjected both to circumferential and end pressure, a number of small holes being provided for the escape of water.[2] G. Bell[3] has devised a guncotton press, in which it is claimed the block produced is practically uniform in moisture and density from end to end, differing in moisture no more than 0.5% between one end and the other.[4] In the A. Musker press[5] an apparatus for mixing the guncotton with water is attached to the press, so that the vessel containing the guncotton can readily be swung into position for compressing the pulp into blocks. When the block has been sufficiently compressed, the cylinder can be swung back into its original position and a fresh one substituted for repeating the operation.[6]

from which allowances are made in calculating their course, and the speed of propulsion required in order to come in contact with the object to be demolished. The difficulty of insuring this uniformity from a segmental torpedo is obvious, and increases with the number of segments composing the charge. See Arms and Expl., 1899, **7**, 121.

1. According to O. Guttmann (J.S.C.I., 1892, **11**, 203) "the compression of guncotton into cartridges requires far more care than that of gunpowder, as this is done in a warm state, and guncotton, even when cold, is more sensitive than gunpowder. When coming from the centrifugals, the guncotton should always pass first through a sieve in order to eliminate nails or matches which may by chance have got into it. To protect the men working the hydraulic valves during compression, at Waltham Abbey they have a curtain made of ships' hawsers, which is at the same time both elastic and resistant."

2. In addition to the tedious and hazardous operation of charging and loading submarine mines and torpedoes with a large number of segments, the charges when built up were unsatisfactory in that the layers of air between the adjacent small blocks considerably retarded the progress of the detonation.

3. E.P. 10663, 1904; U.S.P. 835296, 835297, 1906. For testing solid and built-up guncotton blocks, see U.S. Torpedo Station letter No. 3326, abstracted in Engineering 1910, **89**, 123. The built-up warheads in pieces were found superior.

4. In those processes of pressing whereby an already preparatorily-formed block is further compressed by acting upon it by a hydraulic ram at only one end in a mold, the other end being closed, it was found the block produced did not possess the necessary uniformity of density and moisture, it being found that the block was much denser at the end nearer the ram. The latter end was comparatively too moist, and so soft that it had to be cut away. If the moisture at any part of the block is too low, the projectile is usually considered unsafe, it being well established that the moisture should not be less than 18%. On the other hand if there be excess of water at any part of the charge, the detonation under ordinary priming conditions will be incomplete. Uniformity in density is necessary in the case of a charge of a locomotive-torpedo in order that the proper balance of the torpedo containing it may be maintained when submerged, for the successful delivery of the torpedo depends on very delicate adjustments of weights and propelling and guiding apparatus, so that a difference in weight between the ends of a torpedo charge might be sufficient to render the torpedo useless unless the difference in weights were known beforehand and allowed for.

5. E.P. 3725, 1905.

6. In the method of The New Explosives Co., Ltd., and J. A. Carter (E.P. 12378, 1907), the charges are made in longitudinal halves or sections of a size to fit the projectile, etc., by compression in molds, where the pressure is exerted in a direction transverse to the axis of the mold. The sections may then be united

The guncotton used in the U. S. Navy for torpedoes is compressed into rectangular blocks with chamfered corners, 2.9 in. in diameter and 2 in. in height, each block being provided with a hole ½ in. thick lying in its vertical axis. Such blocks may be obtained by pressing the wet pulp in a molding press at a pressure of about 100 lb. per sq.in., followed by a high pressure of about 6,500 lb. per sq.in. When damp this military cotton may be shaped with wood-working tools in much the same manner as wood. It is stated[1] that in the preparation of the guncotton charges for use in the heads of very large torpedo-shells fired from the guns of the U. S. Vesuvius, these compressed guncotton blocks were sawed with a fret saw and shaped in lathes to conform the block to the particular configuration of the torpedo heads.

Nitrocotton and Picric Acid. About 1886 M. Turpin prepared a combination of picric acid and collodion cotton as an explosive, to which the name Melinite was given. Experiments along these lines were conducted in England at Lydd, the product finally adopted being called Lyddite. The Japanese explosive Shimose is said to be similar to Melinite and Lyddite. The general method of manufacture is supposed to be the incorporation of picric acid with collodion cotton by means of the mutual solvent acetone or ether-alcohol, the gelatinous mass then being deprived of excess of solvent by gentle heat or evaporation in a warm room. It was soon found that when these combinations were used in shells, the free picric acid attacked the copper of the shell, forming copper picrates—stable with difficulty. Salts of picric acid, especially ammonium picrate, were used to replace the free picric acid, but due to several inexplicable explosions with these combinations, they have not received the general adoption that their inventors predicted. C. Buck[2] proposes to combine both trinitrophenol (picric acid) and dinitrophenol with pyroxylin, the three being mixed together in the dry state, and afterwards combined by melting together. He recommends picric acid 50, dinitrophenol 50, and pyroxylin 4 parts, to which, after combination is added barium nitrate,

by means of collodion solution or the like, to form a single piece, the use of lathe-turning being thus rendered unnecessary. In the apparatus claimed for carrying out this process, the molds for the separate sections are provided with drainage perforations and are open at the upper part to receive the press-head, while mechanical means are provided for bringing them beneath the press-head and removing them after the compression. A movable transverse partition may be fitted into the mold so as to leave a space at the nose. This partition is removed before the compression, so that the pulp may enter the space, with the result that this portion of the charge does not receive pressure in excess of that exerted upon any other portion.

1. C. E. Munroe, International Encyclopedia, 1909, 9, 370.
2. U.S.P. 940580, 1909.

50 and paraffin 4.1. G. Hathaway has patented a similar preparation [1] especially applicable in deep-shaft mining, and to the demands of mining in mountainous districts where rock of unusual hardness is encountered.

Flash-Light Composition. Y. Schwartz [2] combines with a quickly combustible material, as magnesium powder, a cement of pyroxylin dissolved in ether-alcohol, while H. Luttke [3] makes an envelope of thin collodion sheets to contain the magnesium, the advantages claimed being easy ignition and durability. L. Carré [4] prepares matches by dipping pieces of straw, haulms, rushes, or grass in a celluloid solution, which, after drying, are dipped in the match composition.

Stability Tests, sometimes also called "heat" and "fume" tests, are applied to explosives to determine their keeping qualities, which is their stability. Applied to the product in the course of manufacture, they are of value as indicating the extent to which purification has been carried, i.e., completeness with which those products have been eliminated which might induce decomposition, or cause spontaneous combustion. As cellulose and glycerol nitrates decompose but slowly at the ordinary temperature when properly prepared and purified, and samples of guncotton have been stored for years without serious deterioration, yet the sulphuric esters and other indefinitely characterized bodies formed in manufacture and which are extremely difficult to remove from the nitrocellulose, render accurate control of stability to be a necessary requisite for safe manufacture. Before the value and accuracy of stability tests were established, the series of fatal explosions which resulted in attempts to produce guncotton in large amounts commercially, temporarily put to a stop to its manufacture in various countries. It was not until Sir F. Abel had proven the value of his "heat test," that it became possible to prepare nitrocellulose-containing explosives in large quantities with a reasonable amount of safety and uniformity. Although this test has many imperfections, it is perhaps to-day the most widely used single nitrocellulose stability test. Nearly all the stability tests evolved depend either upon the measurement of the volume of nitric oxide disengaged from a known volume of the sample in a determined

1. U.S.P. 815821, 1906. The mixture comprises barium nitrate 7, paraffin 6, benzene 1, dinitrophenol 7.1, collodion 7.25, pulverized wood charcoal 0.5, and paraffin oil 0.75. Skoglund (E.P. 18362, 1888; F.P. 194905, 1888) proposed to combine nitrocotton and picric acid, subsequently adding ammonium tartrate, carbonate or oxalate.
2. U.S.P. 613021, 1898.
3. E.P. 768, 1903.
4. E.P. 117, 1908.

period, and which are the so-called " trace tests " in which the time taken to color a very sensitive reagent paper is noted, or the temperature is raised to the point where incipient or complete combustion ensues, as can be detected either by less sensitive reagents as litmus paper, or observable as fumes. A third subdivision may perhaps be made into the " quantitative tests," in which the products of combustion are analyzed, and the amount given off in a known period of time calculated. In the first class may be included the Abel, Guttmann, Hoitsema and Ordnance Department 115° tests; in the second class the Vieille, German Test at 135°, and in the third class the methods of Will, Bergmann and Junk, Obermüller, Thomas and Hess, all described herewith.[1]

The Vieille Test. In this test 10 gm. of the explosive is heated at 110° in a strong glass tube or bottle in a specially designed bath, a piece of standard blue litmus paper being placed above the sample and the tube closed air-tight. Heating is continued in the air-bath until the litmus paper is entirely reddened. The time required for the reddening is noted, after which the tube is removed and opened. This test is continued each day, until the time required to redden the litmus to the standard tint is not over an hour, a clean tube and fresh paper, of course, being used each day. The daily times are added and the total accumulated time should not be less than thirty hours for powders for 5 in. and larger guns, twenty hours for powders designed for less than 5 in. guns and ten hours for nitrocellulose.[2] This test has been adopted officially in France, and in some other countries, but the results obtained by this test have been regrded by Sy [3] and some others as unreliable.[4]

U. S. Ordnance Methods of Testing. The following are tests for nitrocotton as revised by the Ordnance Department, April 18, 1908, omitting certain details not available for publication:

1. For " Methods of Testing Stability of Explosives in Various Countries " see Escales, Z. ges. Schiess- u. Sprengstoffw., 1910, **5**, Exhaustive series of reports by a special commission appointed by 6th Int. Cong. Applied Chem. to investigate the subject. See A. Leroux, Bull. Soc. Chim. Belg., 1905, **19**, 243; M. Jacqué, Z. Schiess- u. Sprengstoffw., 1906, **1**, 395.

2. On account of the volatility of nitroglycerol and its danger of explosion, blasting gelatin and similar nitroglycerol-containing explosives cannot be tested by this method. For " Optical Indicator of the Decomposition of Smokeless Powders," see J. Bouchaud-Praceiq, F.P. 413821, 1909; also J.S.C.I., 1908, **27**, 961; 1909, **28**, 1007, 1105. For determination of relative amounts of smoke produced from smokeless powders, see H. Rebenstorff, Zeit. ges. Schiess- u. Sprengstoffw., 1908, **3**, 45.

3. J.A.C.S., 1903, **25**, 555; Jour. Frank. Inst., 1908, **166**, 249, 321, 433. He finds the results are reliable only when the explosive is either very good or bad.

4. As the reddening of the litmus indicates the presence only of acid products, it is affected by the moisture content of the sample. The papers used by the U.S. Ordnance Department are the same as described under the " 135° test."

Heat Test with Potassium Iodide Starch Paper.[1] The sample shall be pressed in a clean cloth or wrung in a wringer if it contains a large excess of water. The cake shall be rubbed up in the cloth until fine, taking care that it does not come in contact with the hands, spread out on clean paper trays, and dried in an air bath at 35–43°, just a sufficient length of time to reduce the moisture to that amount which will give a minimum heat test, this amount being from 1.5–2%. If, as sometimes happens in dry weather, the moisture has been reduced to less than 1.5%, the sample shall be placed in a moist atmosphere for a time not exceeding two hours, until the required moisture is obtained. The whole time of drying and making the test shall not exceed eight hours.

The dried sample for the heat test shall be weighed out in 5 test tubes, 1.3 gm. (20 grains) to each tube, so that a series is obtained covering the widest variation allowed for moisture. These tubes are standard, 5.5 in. long, $\frac{1}{2}$ in. internal diameter, and $\frac{5}{8}$ in. external diameter, closed by a clean cork stopper, fitting tightly, through which passes a tight glass rod with plantium holder for the paper. Corks are discarded after one test. The nitrocellulose is pressed or shaken down in the tube until it occupies a space in the tube of $1\frac{5}{8}$ in. The test paper, about 1 in. in length and 3 in. wide, is hung on the platinum holder, and moistened on its upper half with a 50% solution of pure glycerin and water. The heating bath, carefully regulated at $65.5° \pm 1.°$, is placed so that a bright reflected light is obtained and the tube placed in the bath. Time is marked when tube enters bath. As test continues, a slight film of moisture condenses on inside of tubes, and the line of demarcation between wet and dry test paper is kept abreast the lower edge of the moisture film. The first appearance of discoloration of the damp portion of the test paper marks the end of the test for each separate tube, the minimum test of any one of the five tubes being the heat test of the nitrocellulose. This discoloration is to be greater than that obtained at the same time by a blank test. The standard water bath holds ten tubes and is made long and narrow, to reduce to a minimum the heating of the upper portions of the tube. These tubes are immersed in the bath to a standard depth of 25 in.[2]

1. For preparation of potassium iodide starch paper, see C. Storm, J. Ind. Eng. Chem., 1909, **1**, 802.

2. The weak points in this test as summarized by Sy (J.A.C.S., 1903, **25**, 550) are as follows: In cases of the decomposition of the sample during the test, it shows only the beginning and not the continuation of the decomposition, it being more important to know how decomposition proceeds than when it begins. Traces of unstable nitro-compounds would show a nitrocellulose or powder in which they are found by this test to be bad; yet such traces might not cause a decomposition of the explosive, if stored under ordinary conditions. Traces of solvent left in the powder affect the test. The test may be masked by certain substances

German Test at 135°. A sample of nitrocellulose is dried at ordinary laboratory temperatures over night, or, as for the heat test, 2.5 gm. are pressed into the lower 2 in., in each of two tubes, of heavy glass, about 290 mm. long, 18 mm. outside diameter, and 15 mm. inside diameter, closed with a cork stopper through which a hole 0.15 in. in diameter has been bored. A piece of standard blue litmus paper 70 mm. long and 20 mm. wide (Frankford Arsenal formula) is placed in each tube, its lower edge 1 in. above the cotton. When the constant temperature bath has been carefully regulated at $134.50° \pm 0.5°$, these tubes are placed in the bath so that not more than 6.7 mm. of length projects from bath. Examination of the tubes is made by withdrawing about one-half its length and replacing quickly each five minutes, after twenty minutes have elapsed. The litmus in either shall not be completely reddened to standard in less than thirty minutes. The bath must be placed in a good light, with a suitable background. There shall be no failure in either of the tubes.[1]

Nitration. Nitration is determined on a 1 gm. sample of nitrocellulose dried 1.5 hours at 95–100°, or in a vacuum dryer after a thorough air drying. The nitrocellulose is washed into a du Pont nitrometer [2] by 20 cc. of H_2SO_4. The per cent of nitrogen is read by a comparison of gas given off with a standard volume. The nitrometer is standardized by preparation of a calculated standard volume of dry air at a temperature of 20° and 760 mm. pressure at 20° in the comparison tube. When pure KNO_3 is tested with the standard sulphuric acid against such comparison tube, the nitrogen figure should invariably be 13.87%, when a correction is made of 0.02% for solubility of gas in H_2SO_4. The acid used shall be chemically pure sulphuric acid containing 94–96% H_2SO_4.

as mercury salts, as the chloride, carbonates, alkalis, amine, ethyl acetate, acetone, oils, vaseline and aniline, which may be added to the explosive for that purpose. Explosives containing masking substances are not accepted by the Ordnance Department. The test is affected by the condition of the sample, size of grains, whether recently prepared for testing or exposed to air, moisture in the air and slight differences in test papers.

1. According to A. Sy (l.c. 554) three observations are made: (1) Reddening of the litmus paper; (2) appearance of brown fumes (N_2O_4), and (3) explosion of the sample. The minimum time required by government specifications for these three observations is as follows:

	Litmus red.	N_2O_4.	Explosion.
Nitrocellulose	30 min.	45 min.	5 hrs.
Nitrocellulose powder	75 min.	120 min.	5 hrs.
Nitroglycerol powder	30 min.	45 min.	5 hrs.

It is desirable to have a standard litmus paper, different makes giving varying results. The great value of this test consists in keeping all the conditions as uniform as possible.

2. Similar to Lunge Gas-volumeter.

Organic Residue. This is obtained by dissolving 1 gm. nitrocellulose in pure acetone, filtering by decantation, and finally on an asbestos filter, drying and determining loss by ignition.

Ash. This is determined by decomposition with nitric acid, ignition, and weighing of residue.

Soluble Nitrocellulose. Soluble nitrocellulose is found by subtracting the sum of ash, organic residue, and insoluble nitrocellulose from 100%.

Insoluble Nitrocellulose. Insoluble nitrocellulose is determined by soaking 1 gm. of the dry sample over night in 95% alcohol. In the morning the temperature of the mixture is brought to 15.5° and sufficient ethyl ether, at the same temperature, is added to make the mixture of ether-alcohol 2 to 1 by volume. The mixture is kept at this temperature for one hour. After solution, the insoluble nitrocellulose is filtered off and weighed, correction being made for ash and organic residue insoluble in acetone. Where the amounts of insoluble nitrocellulose and organic residue are very small, comparative volumetric readings may be made in long tubes, allowing the insoluble material to settle after regular treatment for solution in the solvents. The lower portion of these tubes is constricted to $\frac{1}{2}$ in. in diameter, cylindrical shaped, and graduated weighting of residue.

Moisture. From 10–100 gm. is evenly spread out on a paper tray placed in a water oven at 98–100°, and dried as long as it decreases weight upon reweighing. The nitrated cotton from a Selwig and Lange extractor will contain from 20–30% water; that from a hydraulic press from 18–25%, while an air-dry nitrocotton will seldom exceed 3%.

Acidity. This may be determined (*a*) by soaking 1 gm. in a glass-stoppered bottle with 25 cc. neutral water for two hours with occasional agitation. The clear supernatant liquid is then withdrawn with a pipette and titrated with N/10 or N/100 alkali, phenolphthalein or azolitmin being used as indicator. A quick and accurate method is to dissolve 1 gm. nitrocotton in 25 cc. neutral acetone and add this liquid in small portions and with much shaking to 100 cc. neutral water. The nitrocotton is precipitated out and after filtration through paper an aliquot portion of the filtrate is titrated with standard alkali as before.

Alkalinity. Some manufacturers leave traces of sodium carbonate in nitrocotton intended for artificial leather and photographic films in order to neutralize any traces of acid which might subsequently develop. Five gm. of the air-dried sample are finely divided and digested with 25 cc. N/2 HCl for one-half hour, the mass

diluted to 250 cc. and portions of 25 or 50 cc. each titrated against standard alkali, using azolitmin or methyl orange as indicator.

Ordnance Department 115° Test. This test, devised by Mr. A. P. Sy,[1] consists in heating the cellulose nitrate in powder on a watch-glass in an oven to a temperature of 115°, the watch-glass and powder being weighed after eight hours, and the process repeated daily for six days or less. It is claimed that this treatment tests the powder in its natural state, all the products of decomposition being taken into account, while in the older tests only the acid products are shown and in Will's test only nitrogen. It is simple, and not subject to the variations of some of the former tests.[2] [3]

Explosion Test is required by the Ordnance Department, but can be regarded as but approximate or as differentiating between a very good or very bad powder. A small sample of the explosive, usually 0.1–0.2 gm., is placed in a heavy test tube, tightly stoppered and placed in a paraffin bath at 100°. The bath is continually stirred and the heat so regulated that the temperature increases 5° per

1. J.A.C.S., 1903, **25**, 549; J. Frank, Inst., 1903, **155**, 161.

2. Bergmann and Junk (J.S.C.I., 1904, **23**, 953) have described a test for stability, from which they deduce that a stable guncotton does not evolve more than 2.5 cc. NO per gm. on being heated to 132° for two hours, and a stable collodion cotton not more than 2 cc. Also that the percentage solubility of a nitrocellulose in ether-alcohol increases by heating to 132°.

3. Mercuric chloride interferes with these heat tests, and, as has been shown by J. Moir (J. Chem. Met. and Min. Soc. S. Africa, 1907, 8, No. 7) is frequently added to wet collodion cotton, ostensibly to prevent its becoming moldy, but sometimes also to make it pass the official heat test, even when it is really defective. Ordinary tests for mercury fail because mercuric chloride cannot be extracted (except by volatilization) owing to its affinity for organic matter. The author has devised the two following simple processes: (*a*) *Combination of Hargreaves and Rowe's method with E. A. Mann's method.*—The moist guncotton, along with a piece of (ignited) silver foil is placed in a flask immersed in boiling water, and air is aspirated through it, and then through bulbs containing 2% sulphuric acid. After two hours any mercuric chloride which has escaped the silver becomes deposited thereon by using the foil as anode in electrolyzing the dilute sulphuric acid from the bulbs (two hours with about 4 volts required). The foil is dried and the deposit sublimed on to a microscopic slide, as in the other methods. (*b*) *Conversion into non-volatile compound.*—The cotton is extracted with hot very weak potassium iodide solution, and the extract (containing K_2HgI_4) concentrated to a small bulk and electrolyzed. Iodine separates on the platinum basin used as cathode, and the whole of the mercury collects on the gold or silver foil anode after two or three hours, and is worked up as above. The latter method is the quickest and most sensitive the author has as yet tried, and has the advantage of absence of all danger of explosion. For method of detection of mercury in explosives see G. W. Patterson, Seventh Int. Congr. App. Chem., London, 1909; abst. J.S.C.I., 1909, **28**, 747, in which simplified methods of preparation for spectroscopic tests are described. Two gm. samples are dissolved in organic solvents and electrolyzed directly in the solvent, or, when only partly soluble, extracted by such solvents, and the residue treated with nitric acid to destroy all organic material, the residue being extracted with water and electrolyzed. Metallic mercury is detected by the modified or second method. The method is also applicable for separation for quantitative determinations. The method is accurate to 0.000001 gm. of mercury, but fails with less than 0.0000001 gm. of mercury.

minute. The temperature at which the sample explodes is noted, which is the result sought.[1]

Will's Stability Test.[2] A 2.5 gm. sample of cellulose nitrate is packed in a decomposition tube 15 mm. wide and 10 cm. high, and heated by an oil bath to 135°, the oxides produced by decomposition of the nitrate being passed over ignited copper, where they are reduced, and the nitrogen retained in the measuring tubes.[3] The air in the apparatus (Fig. 310) is first entirely displaced by a stream of CO_2, from a generator [4] or gas holder, the gas being purified by passing through scrubbers. The stream of gas is maintained during the whole of the operation, being absorbed at the end of the system by solution in KOH.[5] The pressure and rate of flow of gas must be very carefully measured, and this is arrived at by counting with a stop-watch the number of bubbles of gas per minute which bubble through an interposed wash bottle of sulphuric acid.[6] The preheating worm in connection with the decomposition tube is of the thinnest hydrom-

1. A. Sy (J.A.C.S., 1903, **25**, 553) states the standards established by the Ordnance Department for this test to be as follows: A good nitrocellulose should not explode under 186°, that of a nitrocellulose powder under 177°, and a nitroglycerol powder under 170°. Variations in results may be caused by differences in manipulation of the test, especially in the speed with which the temperature is raised. Greater differences between the explosion points are obtained when the temperature is raised only 1° instead of 5° per minute.

2. W. Will, Mitt. a. d. Centrahlstelle f. Wissench. Tech. Unters. Nuo-Babelsberg, 1902, (2), 5; J.S.C.I., 1901, **20**, 609, 932; 1902, **21**, 1490, 1554; Z. ang. Chem., 1901, **14**, 743; aslo Kismiensky, Mem. des Poudres Salpêtres, **13**, 247.

3. The principle of this test depends upon the regularity with which a cellulose nitrate is decomposed under conditions which permit of the removal and estimation of the products of decomposition, especially the nitrogen. The temperature of 135° is employed, the ester being kept in a constantly changing atmosphere of carbon dioxide, heated to the same temperature. The oxides of nitrogen formed are passed over red-hot copper, where they are reduced to nitrogen, and finally the rate of evolution of nitrogen is measured. According to Will, the best criterion of a stable cellulose nitrate is that it shall evolve at high temperatures equal quantities of nitrogen in equal periods of time. For the accuracy of this test, it is essential that the material should be purified to the limit, so that continued washing produces no further speed in decomposition when tested by his method.

4. Objection has been raised to the use of compressed CO_2 in steel cylinders from the danger of the presence of varying amounts of air present, the nitrogen present in which would lead to fictitious results. It has been found, however, that it is quite possible to produce this gas commercially with as little as 0.01% air present—an entirely negligible quantity. Estimations of air present in a cylinder of this gas show that even when the CO_2 is nearly exhausted the residual gas contains but a very small amount of air, insufficient to influence the accuracy of the determination. A micrometer screw attached to the main valve of the cylinder is useful for governing the rate of flow of gas. A blank experiment is usually made to determine the amount of air in the CO_2, and correction made in the final readings.

5. To guard against the possibility of explosion, the decomposition tube and oil bath are encased in strong iron and glass walls.

6. A mercury manometer is connected here and is useful in detecting possible leaks in the apparatus. If the flow of gas be too rapid, it does not become sufficiently preheated in the glass spiral, and if too slow there is too rapid decomposition of the ester by the nitrogen oxides evolved, which are not removed.

eter stem tubing, the ground-in exit tube being kept in position by a small screw clamp with trunnion bearings.

To permit of duplicate experiments being made at the same time, the bath is adapted for two decomposition tubes. The bath itself is filled with high-flashing lubricating oil and fitted with a lid with two circular openings for the spiral tubes. This is surrounded by an asbestos-covered envelope, in the interior of which circulate the products of combustion of the numerous gas jets used.[1] The reduction tube, which is of copper, consists of an outer tube and an inner, the latter reaching nearly to the bottom of the former.[2] A nitrogen-

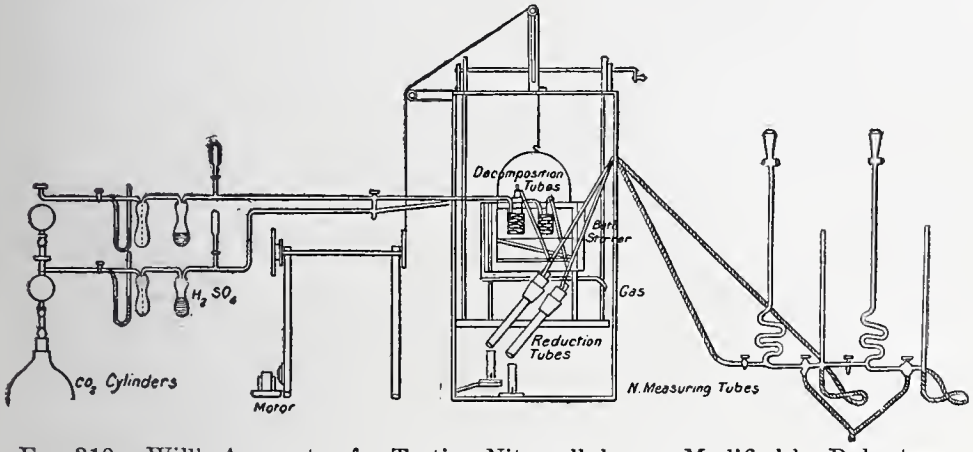

FIG. 310.—Will's Apparatus for Testing Nitrocellulose as Modified by Robertson.

measuring apparatus with zigzag tube is used, having been found more economical in potash.[3] The results are best expressed by plotting on co-ordinate paper, letting the time in hours and the milligrams of nitrogen be the two factors. When the speed of carbon dioxide is about 1,000 cc. per hour, a line of nitrogen evolution is obtained which is curved and forms a satisfactory representation of the inherent

1. The stirrer, operated by a water motor, or electrically, has a series of helical blades, curved to thoroughly mix the oil. By this means great constancy of temperature is maintained. The bath should also be equipped with a temperature regulator and delicate thermometer.

2. Into the inner tube is placed a spiral of reduced copper gauze, and in the annular space between the tubes a reduced copper spiral is tightly packed. The bottom of the inlet tube dips into a layer of copper oxide asbestos, on top of which is a layer of reduced copper asbestos. Through an India-rubber cork a glass tube is inserted, through which the CO_2 and N passes out of the reduction tube. As that part of the tube containing the spirals is heated to redness, the water jackets which are provided on both outer and inner tubes, protects the India-rubber stopper.

3. The readings may be more conveniently taken by counterbalancing the column of potash solution and reading off the volume of gas at atmospheric pressure. To do this, momentarily close the tap directly in front of the measuring tube, which does not interfere with the progress of the test. The air correction is subtracted from each reading, and the remainder brought to the weight of nitrogen by the usual methods of calculation.

instability of the material.[1] The steepness of the curve formed by thus plotting the results is an indication of the stability of the ester under examination. The steeper or more abrupt the curve, the more nitrogen is evolved in a given unit of time, and the less the stability.[2]

The Guttmann Stability Test.[3] Consists in employing filter paper wetted with a solution of diphenylamine[4] in sulphuric acid,[5] the test being applied in the following manner: 1.5 gm. of the cellulose nitrate is placed in the regulation size and form of test tube. Strips of well-washed filter paper, 25 mm. wide, are hung on a hooked glass rod in the tube. A drop of the diphenylamine solution is taken up by means of a clean glass rod, and the upper corners of the filter paper are touched with it, in such a manner that when the drops run together, about a fourth of the filter paper is moistened. This is then put into the test tube, and this again into the water bath, which has been heated to 70°. The heat-test reaction should not appear in less than fifteen minutes, and will begin by the moist part of the paper acquiring a greenish-yellow color, and from this moment the paper should be carefully watched.[6] After one or two minutes

1. Will recommends a speed of 1,500 cc. per hour, but it has been found that when the evolution of gas is slower, slight differences become more apparent, and relationships are evident which would be obscured by the greater gas evolution.

2. Several hours are required to completely eliminate the air from the apparatus. The fifteen minutes stated by Will has been found insufficient. Readings are commenced thirty minutes from the commencement of heating the cellulose nitrate, and are continued at fifteen-minute intervals for a further period of four hours. Fresh caustic potash solution is added every half hour or so. When unstable esters are heated under the conditions of this experiment, the separation of nitrogen is much greater at the commencement of the operation than later. If the product be very unstable, explosion is liable to ensue. A cellulose nitrate is regarded as "normal" (satisfactory) when the nitrogen separation is uniform throughout the process. If the absolute amount of nitrogen separated is to be determined, the ester must be accurately weighed; the air in the CO_2 carefully estimated, and the reduction of all gas volumes to 0° and 760 mm. pressure be made. See also G. W. Patterson, "Stability Tests of Smokeless Powders," Seventh Int. Cong. Appl. Chem., London, 1909.

3. J.S.C.I., 1897, **16**, 288; Z. ang. Chem., 1897, 233.

4. G. Spica (Revista, Aug., 1897) proposes to impregnate the paper with *m*-phenylenediamine hydrochloride and cane-sugar, but as the reagent is much more sensitive than potassium iodide and starch, it has not been more extensively used; the author is unaware of the delicate nitric acid reagent 9.10-monooxyphenanthrylamine (A. Schmidt and H. Lumpp, Ber., 1910, **43**, 794) having as yet been tried in this connection. See J. Strauss, Proc. U. S. Nav. Inst., 1910, **36**, 929.

5. 0.10 gm. diphenylamine crystals are placed in a wide-necked flask, stoppered, with 50 cc. dilute sulphuric acid (10 cc. acid, 40 cc. water) and placed on a water bath at 50–55°. This temperature will cause the diphenylamine to melt and at once pass into solution in the sulphuric acid. The flask is then removed, shaken, cooled, 50 cc. concentrated glycerol added, and the finished reagent kept in the dark.

6. This test has been adopted by the Belgian military authorities, and is used elsewhere, but Thomas (Zeit. ang. Chem., 1898, 1027), Aspinwall (J.S.C.I., 1902, **21**, 687) and Spica (Revista, Aug., 1899) have found it unsatisfactory. F. Nathan (J.S.C.I., 1901, **20**, 10) finds the test fails when testing volatile explosives such as

a dark-blue mark may suddenly appear on the dividing line between wet and dry paper, which is the point which is to be looked for.[1]

Bergmann and Junk Test, which, although, like the Will test, is quantitative, does not require such elaborate or costly apparatus. In this test,[2] which has been adopted by the Prussian military authorities, the cellulose nitrate is heated in a glass tube at 132° and the nitrous gases absorbed in water, being estimated at the end of the operation by the Schultze-Tiemann method.[3] The heating bath is

nitroglycerol, the latter being decomposed by the sulphuric acid on the paper. Hoitsema (Zeit. ang. Chem., 1889, 705) heats the explosive at a constant temperature for fifteen minutes, and then aspirates the volatile products of decomposition by means of a current of carbon dioxide, through glass wool moistened with Guttmann's diphenylamine solution. This operation is repeated, lowering the temperature each time by 10°, until a temperature is reached at which no volatile decomposition products come over which give a color reaction with diphenylamine, this being taken as the point at which decomposition ceases. This test is exceedingly sensitive.

1. W. Dreger (Z. ges. Schiess- und Sprengstoffw., 1909, **4**, 123) determines diphenylamine, based upon the fact that in alcoholic solution it reacts with bromine to form tetrabromodiphenylamine:

$$(C_6H_5)_2NH + 8Br = (C_6H_3Br_2)_2NH + 4HBr.$$

This bromo-derivative is insoluble in water, sparingly soluble in alcohol, readily soluble in benzene, xylene, chloroform, and ethyl acetate, especially on warming; it melts at 102°, and crystallizes in reddish needles having a silky luster. For the determination of diphenylamine in the commercial product, the sample is dissolved in alcohol, or if already in ethereal solution, the ether may be driven off by adding alcohol and warming. Excess of bromine is then added, drop by drop, with constant stirring. The solution is next mixed with twice its volume of water and the whole boiled until the alcohol and excess of bromine are driven off and the bulk is reduced to one-half—constant stirring is needful. The precipitate of tetrabromodiphenylamine is transferred to a funnel, or Gooch crucible, connected to a water pump, and washed with warm water to remove the last traces of alcohol and bromine and lastly dried at 98–100° until of constant weight. Smaller quantities may be estimated by evaporating to dryness in a previously weighed glass vessel. If it be desired to determine the diphenylamine contained in gelatinized nitrocotton, the nitro-compound is gradually decomposed by means of soda lye in a capacious flask. The flask is closed by a doubly perforated stopper fitted with a stoppered funnel, and a bent tube attached to a condenser, which communicates with a suitable receiver. The free diphenylamine and any camphor that may be present are carried into the receiver which contains ether. The distillate is well shaken with common salt; the ether completely dissolves the diphenylamine and any camphor, and the determination is then completed as before indicated.

2. Zeit. ang. Chem., 1904, **17**, 982; abst. J.S.C.I., 1904, **23**, 953.

3. P. Obermüller (Berl. Bezirksverein des Ver. deutsch Chem., Oct. 11, 1904) has shown that although the Bergmann and Junk method gives excellent results in determining the stability of nitrocellulose, it is too complicated and time-consuming to be of service in controlling the process of manufacture. Obermüller's method consists in heating the nitrocellulose *in vacuo* at the constant temperature of 140°, and continuously measuring by means of a mercury manometer, the pressure exerted by the evolved gases, the latter being maintained at constant volume. The rate at which the pressure increases is a measure of the rate of decomposition of the nitrocellulose. For the B. Pleus improvement of this test, see Z. ges. Schiess- Sprengstoffw., 1910, **5**, 121. See also Chem. Abst., 1908, **2**, 1044, 1046, 2050. In the Hess test (Mitth. Gegenst. d. Artill. Geniewesens, 1879, 345; Dingl. Poly., **234**, 43) nitrocellulose is heated in a tube to 70° and by means of a current of air the volatile decomposition products are aspirated into a dilute potassium iodide starch solution. Five determinations are made, i.e., four colorimetric.

a rectangular copper vessel 35×10 cm. and 25 cm. high, containing 10 tubes each 20 cm. long let into it to take the glass tubes. The boiling is carried out in heavy, thick-walled tubes 35 cm. long and 2 cm. internal diameter, a hollow glass stopper surmounted by an absorption apparatus being ground into the neck. The heating bath carries a bath to indicate the temperature, *iso*amyl alcohol being the liquid used in maintaining the constant temperature.[1] The guncotton is first dried in a bath at 50° in a good current of dry air. The sample is then passed through a sieve and the drying continued in a desiccator over sulphuric acid until it contains not over 1% moisture. About 2 gm. are weighed out, introduced into the apparatus, any adhering particles being brushed down with a feather or camelshair brush. The glass stopper is then inserted, the beaker half-filled with water, the glass tube being introduced into one of the holes in the bath, the temperature of the latter being at 132°. Heating is continued for two hours, after which the tube is removed from the bath. As the tube cools and the air contracts, water is drawn from the beaker onto the cotton. The absorption apparatus is washed out into the tube, the volume being made up to the 50 cc. mark indicated on the tube. The liquid is then filtered, an aliquot portion (usually 25 cc.) of the filtrate taken, 1 cc. N/2 potassium permanganate solution added to oxidize nitrous to nitric acid, and the nitrogen then estimated as above stated. A satisfactory guncotton should not yield over 2.50 cc. nitric oxide per gm. of original sample in two hours' heating and a stable "collodion cotton" not more than 2 cc. The results agree fairly well with the Will test. It has been noted that heating the guncotton to 132° increases the percentage solubility of the nitrocellulose in ether-alcohol.

Waltham Abbey Silvered Vessel Test has been designed to imitate actual conditions of powder storage, and has been adopted by the British War Department, especially for the examination of cordite which has given a low heat test, and which has been manufactured

readings of the stareh-iodide solution, and the time required for eombustion of the sample. It is elaimed that the stareh-iodide solution is unduly sensitive and may indieate deeomposition whieh in reality does not show instability. In the Thomas test (Zeit. ang. Chem., 1898, 1027) the sample is heated for eight hours daily in a glass-stoppered tube, the time when the sample fumes being noted. Satisfaetory nitroglyeerol powder should stand four days heating at 95°, and a good nitroeellulose or nitroeellulose powder should not develop brown fumes (N_2O_4) before three days' heating of eight hours eaeh, temperature 100°. Sy (l.e.) observes that the temperatures are too low to produee a suffieiently pronouneed deeomposition to admit of a elose determination of the appearanee of brown fumes, while varying amounts of moisture and ineompletely eliminated solvents give different pressures in the elosed tubes, whieh pressure affeets deeomposition.

1. The originally deseribed proeess provides for an elaborate wooden cupboard to hold the apparatus, so that in event of an explosion the effeets might be confined

for a considerable period. It is applied only when the heat test at 71° is between four and eight minutes.[1]

The sample is ground as fine as for the heat test, from 40–50 gm. being placed in a glass vessel surrounded with a vacuum jacket, silvered in order to minimize the loss of heat. A long tube is fused in the neck of the vessel and at right angles to it, in order to better observe the appearance of any red fumes as soon as liberated, a thermometer passing through the neck and being imbedded in the sample of powder. The vessels are placed in a thermostat at 80°, ±0.1°. After some time red fumes are observed in the side tube, the temperature of the cordite begins to rise as indicated by the thermometer imbedded in it, the time being noted for the first rise of 2°. When first manufactured, a satisfactory cordite will stand this test from 500 to 600 hours, the explosive being considered unserviceable, and is destroyed, when the test falls below 200 hours.[2]

The Abel Heat Test,[3] as prescribed by the British Home Office, differs in many essential particulars from the method directed by the U. S. Ordnance Department. The test requires[4] a spherical copper water bath of about 8 in. diameter with an aperture of about 5 in. fitted with a loose copper lid about 6 in. in diameter, this resting on a tripod 14 in. high. The whole is surrounded by a thin sheet-copper screen, being heated from underneath by means of an Argand gas burner or Berzelius spirit lamp with copper chimney. The water-bath lid is pierced with 7 holes, one to receive a thermometer[5] and the remaining 6 holes for test tubes containing the material to be tested.[6] A potassium iodide-starch paper[7] and a standard

1. Complete directions for performing this test may be found in "Regulations for Army Ordnance Service" Wyman & Sons, Publishers, 1908, II, 162–167.

2. On account of the large volume of explosive operated upon, it is discreet to carry out the test in a special building removed from other structures. The temperature of the bath may be kept constant by boiling a mixture of water and methylated spirit, or benzol, or by means of a regulator such as the Lowry.

3. For significance of Abel Heat Test, see Robertson and Smart, J.S.C.I., 1910, **29**, 130.

4. For illustrations of apparatus used in this test, see Appendix VI, Regulations for English Ordnance Service, part 2, reproduced in Allen Comml. Organic Analysis, 1910, **3**, 596.

5. The thermometer should have a range of 1–100°, the temperature of the water bath being controlled by a Page (J.C.S., 1876, **19**, 24) or Scheibler regulator.

6. The test tubes are from 5.25–5.5 in. long and of such diameter that they will hold 20–22 cc. water when filled to a height of 5 in. India-rubber stoppers fit the test tubes, and carry an arrangement for holding the test tubes, viz., a narrow glass tube passing through the center of the stopper and terminating in a platinum wire hook, or a glass rod may be drawn out and the end turned up to form a hook.

7. The test paper is prepared by adding 250 cc. distilled water to 3 gm. cornstarch previously washed with cold water, the mixture being stirred, heated to boiling, and kept at a boiling temperature for ten minutes, 1 gm. potassium iodide previously recrystallized from ethyl alcohol is dissolved in 250 cc. distilled water,

tint paper[1] are also specified. The applications of this test are as follows:

Guncotton, Tonite, Schultze Powder, E. C. Powder, etc. The sample is prepared by removing from the center of the block or cartridge, by gentle scraping or rasping, and if necessary, further reducing to powder by rubbing through the fingers or a sieve with a clean, stiff bristle brush. The fine powder thus obtained is spread out in a thin layer upon a paper tray 6×4.5 in., which is placed upon a wire gauze in the water oven, the temperature of which is kept as uniformly near to 49° as possible. The sample is allowed to remain at rest in the oven for fifteen minutes, the door of which is meanwhile left open. After the lapse of fifteen minutes the tray is removed, exposed to the air for two hours, the sample being at some point within that time rubbed upon the tray with a brush or the hand in order to reduce it to a fine and uniform state of subdivision.[2] In applying the test the water bath is first filled to within 0.25 in. of the top, the thermometer inserted through a hole on one side of the water-bath cover, to a depth of 2.5 in. measured from the lid,[3] the water being maintained at a temperature of 76.7° during the progress of the test. When the correct temperature has been obtained, 1.3 gm. of the sample is weighed out, placed in one of the test tubes, and gently pressed down until it occupies not more than 1.3 in. in the tube. A test-paper is fastened to the hook of the glass tube, moistened by touching the upper edge with a drop of a mixture of equal amounts of distilled water and glycerol,[4] the quantity

the two solutions thoroughly mixed and allowed to cool. Strips or sheets of the best English white filter-paper, previously washed with water and redried, are dipped into the solution thus prepared, allowed to remain therein for at least ten seconds, allowed to drain and dry in a place free from laboratory fumes and dust. The upper and lower margins of the paper are cut off and discarded, the other portion of the paper being preserved in well-stoppered or corked bottles, in the dark. The after-preparation, the papers are kept in the dark at least a month before use. If carefully preserved, the papers should remain unimpaired in sensitiveness for a year, but should be tested at frequent intervals by touching a paper with a drop of 25% aqueous acetic acid, which should give no coloration. As the paper deteriorates, a drop of the acetic acid produces a brown or bluish coloration, when they should be discarded. The papers are about 0.4×0.8 in. in size.

1. The standard tint paper is prepared by diluting caramel with water to such an extent that when further diluted 100 times the tint produced matches that from Nessler's reagent in 100 cc. water containing 0.000235 gm. ammonium chloride. With this caramel solution lines are drawn on strips of well-washed filter-paper with a quill pen, the paper being cut into strips same size as the test paper described in the previous note after drying. Only those strips are used in which the brown line has a breadth of from 0.5–1.0 mm. This paper should be protected the same as the iodide paper.

2. The English War Department method differs from this in that it is specified that the guncotton shall be exposed to the air for four hours after drying.

3. The specifications of the British War Department differ in directing that the thermometer and tube be immersed in the water to a depth of 2.5 in., the Home Office directing that the 2.5 in. shall be measured from the cover, so that only 2.25 in actual immersion takes place.

4. The British Home Office directs to apply the aqueous glycerol mixture to

of liquid used being only sufficient to moisten the upper half of the paper. The cork to which the rod and paper is attached in then inserted into the tube, and the latter placed into the bath to a depth of 2.5 in., measured from the cover. The test-paper is first placed near the top of the tube, but not touching the cork, until after the tube has been immersed five minutes. A ring of moisture will by this time have deposited upon the sides of the test tube, slightly above the cover of the bath. When this appears, the glass rod is then lowered until the lower margin of the moistened portion of the paper is on a level with the ring of moisture in the tube. The paper is closely observed, and when a brown line appears at the line of demarcation between the moist and dry portions of the paper, which is equal in intensity to the line on the standard tint-paper, the time is observed and the test is complete. Sporting powders, like Schultze and E. C., which contain a large proportion of non-gelatinized cellulose nitrate, are prepared and tested as described above.

Cordite, Ballistite, and similar partially or wholly gelatinized preparations, are tested as follows: If the sample is in the form of small flakes or grains, as in the U. S. .30-caliber, and other shoulder-arm powders, 1.6 gm. are weighed out into a test tube, but if, as in the case of cordite and larger caliber powders, the grains are larger, they must first be broken up and ground. From each of the pieces selected for the test, pieces 0.5 in. long are cut, and in the larger sizes the pieces further subdivided. The cut pieces are then passed through the mill, the first portion rejected on account of possible presence of iron or other extraneous matter. The ground portion is then placed on the top sieve of the nest and sifted, the portion which passes through the top sieve, but is intercepted by the second, is taken for the test.[1] The English Home Office Instructions for applying the test are as follows: The thermometer is so adjusted in the water bath as to be inserted into the water 2.75 in. below the water-bath lid, the water being maintained at the uniform temperature

the upper edge of the test paper by means of a camelshair brush, while the War Department uses a glass rod forming a continuation of the stopper of a glass-stoppered bottle. While these variations may seem trivial, yet in a test of such delicacy they may produce appreciable variations. It is evident that uniformity of manipulation is the first requisite to satisfactory comparative work.

1. If the nitrocellulose is too hard for the mill, it may be softened by exposure to acetone vapor, or reduced to the required fineness by means of a coarse rasp. If the acetone vapor renders the sample too soft, it may be restored to the desired degree of hardness by simple elimination of solvent by exposure to the air. The sifted material should always be dried at not to exceed 61°, where the volatile matter in the sample exceeds 0.5%. Explosives consisting of both gelatinized and ungelatinized nitrocellulose may be reduced to powder by first softening with ether-alcohol vapor at about 35°, or usually more easily by the use of a coarse rasp. See W. Cullen, J.S.C.I., 1901, **20**, 8.

of 82.2°. An iodide paper is attached to the hook on the glass rod, so that when inserted in the tube it will be in a vertical position, being moistened with 50% glycerol as previously described. The cork with the rod and test-paper attached is inserted into the tube, and the position of the paper so adjusted that its lower edge is about half way down the tube, the latter being then inserted through one of the holes in the cover of the water-bath to such a depth that the lowest portion of the moistened paper is about 0.6 in. above the surface of the cover. When a faint brown tint, equal in intensity to the brown line drawn on the standard paper, makes its appearance at the line between the wet and dry portions of the test paper, the test is complete. With cordite, the English Home Regulations specify that the time between the insertion of the test tube into the bath at 82.2° and the completion of the test must not be less than fifteen minutes, and no new cordite is accepted by the War Department from contractors unless it meets these requirements.[1]

The Firing Point of Explosives may be determined by the method of Horsley, whose apparatus consists of an iron stand with ring support, containing a hemispherical paraffin bath. Above this is another movable support from which a thermometer may be suspended to determine the temperature of the bath. The thermometer is adjusted so the bulb is entirely immersed in the molten hydrocarbon. A thin-walled cartridge case $1\frac{15}{16}$ in. high and $\frac{5}{8}$ in. diameter, is suspended on a triangle over the bath, so that the copper case is immersed in the paraffin for a depth of precisely 1 in. The temperature is quickly raised, after a minute amount of the sample to be tested has been placed in the bottom of the partially immersed cartridge case, and the temperature at which the sample flashes is taken as the firing point. Professor Charles E. Munroe of the U. S. Torpedo Station has determined the firing point of the following nitrocellulose-containing explosives by this method:

Compressed military guncotton, sp.gr. 1.5	203–205°
Air-dried guncotton, stored four years	192–201
Same, stored one year	187–189
Air-dried collodion cotton three years old (from "Red Island Cotton")	186–191
Air-dried collodion, stored wet three years	197–199
Hydronitrocellulose	201–213

1. No new cordite is accepted by the War Department from contractors which does not satisfactorily stand a heat test of thirty minutes, at 82.2°, although the test is carried out with less sensitive papers than those prescribed by the Home Office. Cordite already issued to the service is tested at 71.1°, it being considered serviceable if it stands the test for eight or more minutes, and unserviceable if below eight minutes, and more than four minutes.

If high temperatures are to be taken, the paraffin in the bath may be replaced by Rose's metal or other low-fusing alloy.

Moisture. P. Dupré [1] has described a method of determining moisture, especially applicable to cordite and colloids containing volatile matters other than water. The water is estimated by measuring the amount of acetylene given off when it is allowed to act on calcium carbide. From 1 to 2.5 gm. of cordite, ground as for analysis, is weighed out in a tube of about 1 cm. diameter and about 12 cm. long. It is covered with a layer of sand, and calcium carbide filled in to a depth of about 5 cm., the sand being used to prevent the cordite from coming into contact with the calcium carbide. The tube is then connected with a nitrometer containing a saturated solution of common salt, and the apparatus adjusted to zero with the tube brought to a known temperature by immersion in cold water. It is next immersed in a water bath at a temperature of 100° to a depth of 7–8 cm., and the heating continued until no further evolution of gas is observed. The tube is then brought back to its original temperature, and the volume of acetylene measured, and corrected for temperature and pressure. Owing to the fact that the lime which is formed retains a certain amount of moisture at 100°, it was found that 1 cc. of acetylene corresponds to 0.001725 gm. of water instead of 0.00162 gm. as given by calculation.

Explosive Gelatin, Gelatin Dynamite, etc., 50 grains (3.24 gm.) of the sample of explosive gelatin under examination is intimately incorporated with 100 grains (6.48 gm.) of French chalk, using a wooden mortar and pestle.[2] A standard test-tube is then filled with the sample in small portions, so that when the tube is gently tapped on a table to compact the material, it will have settled to a depth of 1.75 in. The heat test is conducted by bringing the water-bath contents to a temperature of 71.1°, the thermometer being immersed in the water-bath liquid for a depth of 2.75 in., the temperature of the bath being maintained within 0.7° of the standard temperature. A piece of iodide test paper is taken and a hole made in it opposite the middle of one end and about 0.2 in. from the edge. The test paper is then inserted on the glass or platinum hook, so that the paper will stand up stiffly when the paper is placed in the tube. A drop of the aqueous standard glycerol solution is touched to the paper as explained previously, leaving a distinct line about half way up.

1. Anal., 1906, **31**, 213.

2. The French chalk must be of good commercial quality, free from grit, thoroughly washed in distilled water, dried thoroughly and preserved in an accurately ground glass-stoppered bottle, after having been placed under a bell jar until it has absorbed about 0.5% moisture.

The test tube is then inserted in the bath, and the paper so adjusted in the tube that the line between the dry and wetted portion is about $\frac{5}{8}$ in. above the upper surface of the cover. The line of demarcation between wet and dry paper is carefully watched, the first appearance of a brown line at this point noted, and the time elapsing between insertion of the sample in the bath and the development of the faint brown color taken as the heat temperature. The nitroglycerol in the sample under examination is not considered "thoroughly purified" unless at least fifteen minutes elapses before the appearance of the brown color, the average of all the records of the several tubes being taken, if duplicates are run. In addition to the heat test, a liquefaction and exudation test is required of nitrocellulose-nitroglycerol combinations as follows:

Liquefaction Test of Explosive Gelatin. A cylinder of length equal to its diameter is cut from the cartridge to be tested, placed on a clean filter paper and fastened to a level board by a pin passing vertically through its center, the ends of the sample being cut flat. In this condition the sample is to be exposed for 144 consecutive hours to a temperature ranging from 85–90° F., at the end of which time the cylinder should not diminish over one-fourth in height, and the upper cut surface must preserve a flatness and sharpness of the edge.

Exudation Test. There shall be no separation of a substance of less consistency than the bulk of the remaining part under any conditions of transport, storage, or usage, nor when the material has been subjected to three successive freezings and thawings, nor when subjected to the above described liquefaction test.

CHAPTER XIX

CELLULOSE ACETATES[1]

The inflammability and explosiveness of the cellulose nitrates, together with the variety and value of the commercial products in which they enter, have naturally directed attention to combinations of cellulose with other acid radicals, the acetyl derivatives, as yet, having received the most attention. It was hoped also, that by the study of bodies so closely related to cellulose, the structure of the latter might be solved.[2] This subject has recently been greatly stimulated by the insistence of certain municipalities [3] upon the use of uninflammable films in nickelodeons and other "moving-picture shows," thus practically compelling the use of cellulose acetate films. From the present cost of the materials used to produce these esters, it appears probable that in price, the cellulose acetates will never be able to successfully compete with the corresponding nitrates, and their use will be restricted to those arts where their specific properties of uninflammability, resistance to mercerization, faint affinity for cotton dye-stuffs, or low specific inductive capacity, counterbalance increased cost of production.[4]

Historical. The first published attempt to acetylize cellulose was that of Schützenberger, who in 1869 [5] obtained a white, friable product soluble in glacial acetic acid but insoluble in ethyl alcohol or water, by acting upon cotton or filter-paper with acetic anhydride

1. For general articles on cellulose acetate see, Trav. Chim, 1899, **18**, 472; Papier Ztg., 1899, **24**, 155; Jour. Frank. Inst., 1900, **150**, 237; Pharm. Centralh., 1901, **42**, 354; 1902, **43**, 500; 1903, **44**, 664; Muster Ztg., 1905, **54**, 81; Eichengrün, Oest. Chem. Ztg., 1907, **10**, 182.

2. In the hands of Cross and Bevan and others, the aceto-sulphates and aceto-benzoates (Ber., 1905, **38**, 1859, 3531) on account of their ready purification by crystallization, have been fruitful sources of information in attempts to elucidate the structure of the cellulose complex.

3. The first city in the United States to pass such an ordinance was Newark, N. J., in November, 1909.

4. The present ratio (1910) of the cost of the cellulose nitrates as compared with the acetates is about 1 to 3.

5. C.R., 1869, **61**, 485; Schützenberger and Naudin, C.R., 1870, **68**, 814; Zeit. ang. Chem., 1878, **5**, 264.

in a sealed tube at 180°. Samples prepared by this method [1] gave so low a yield of cellulose upon saponification as to indicate that a far-reaching decomposition of the cellulose must have occurred. Franchimont used hydrocellulose as the starting point instead of cellulose,[2] preparing the former according to the method of A. Girard,[3] but with similar results. Miles,[4] repeating the work of Franchimont, placed sulphuric acid in the reacting mixture,[5] thus producing hydrocellulose coincident with acetylation. Although natural [6] cellulose is unaffected by acetic anhydride at ordinary temperatures, yet where 7 parts (by weight) of cellulose and 6 of acetic anhydride are heated together in a sealed tube to 193°, a triacetate (C_6 formula) is formed. If the proportion of cellulose to anhydride is increased, lower acetates result.[7]

1. C. Weber, Gum. Z., October, 1899.

2. Rec. trav. chim., 1883, **2**, 241; 1899, **18**, 472; Ber., 1879, **12**, 1264, 1941; 2059; 1881, **14**, 1290, 2019; C.R., 1880, **92**, 1053, 1056; Z. Skraup and F. Pregl (Ber., 1899, **32**, 2413) found that cellulose when energetically acetylated by acetic anhydride, yields a substance crystallizing from ethyl acetate or alcohol in long needles melting at 228° and identical with that prepared by Franchimont.

3. C.R., 1875, **81**, 1105; 1879, **88**, 1322; Ann. Chim. Phys., 1881 (5), **24**, 337, 384; Publ. ind., 1880, **26**, 46; Eng. Mech., 1880, **30**, 420. He prepared hydrocellulose by treating cellulose with cold sulphuric acid, sp.gr. 1.45; by the action of cold, moist hydrogen chloride on air-dried cellulose, and by heating cellulose with dilute acids. Under the most favorable conditions the weight of hydrocellulose produced was less than the weight of the original cellulose, the discrepancy being explained by assuming that *d*-glucose is simultaneously produced, but adduces no evidence in support of this assumption beyond the fact that after the reaction the acid solution reduces Fehling's solution. The white, friable product obtained —which he called cellulose hydrate—was given the formula $(C_6H_{10}O_5)_2.H_2O$.

A. Stern (J.C.S., 1904, **85**, 336) has repeated Girard's work, was unsuccessful in obtaining hydrocellulose by the first two of Girard's methods, but the action of boiling 5% sulphuric acid on flax and cotton cellulose soon destroyed the tenacity of the fibers and converted the substance into a friable mass, combustion of the product giving figures agreeing very closely with the formula $C_6H_{10}O_5$. See also Fenton, J.C.S. Trans., 1898, **73**, 554; 1899, **75**, 423; 1901, **79**, 361, 807; Proc., 1901, **17**, 166.

4. He found that where the cellulose was treated directly with the acetic acid without the presence of a condensing agent, the necessary conditions for the reaction were such as to almost completely disintegrate the cellulose aggregate, whereas by the interposition of sulphuric acid or similar dehydrating agent, a hydrocellulose was formed, and esterification proceeded much more smoothly. He was the first to point out that esters of widely differing solubility could be formed by a variation of the character and amount of dehydrating agent used. It thus appears that Franchimont was the pioneer in this field of chemistry, and opened the way for the vast amount of work which succeeded him. He used also sodium acetate and zinc chloride, but it was always noted that in pouring the products of reaction of the latter into water, a fluorescent solution is obtained, while the cellulose regenerated from acetates prepared by this method is oxidized by Fehling's solution. Skraup and König (Ber., 1901, **34**, 1115) have regarded Franchimont's acetate as an acetylated diglycose, although Marsden (Jour. Dyers and Col., 1905, **21**, 103; Farber Ztg., 1906, **42**, 172) holds that a true acetate results.

5. U.S.P. 733729, 1903; see F.P. 319848, 1902.

6. By "natural" is to be understood cellulose occurring in nature as distinguished from the cellulose obtained by the reversion of viscose solutions, and the solutions of cellulose in ammoniacal cupric oxide, or neutralized soda-cellulose (mercerized cotton).

7. Cross and Bevan, "Cellulose," 1895, p. 35.

Like cellulose nitrate, cellulose acetate is unmoldable and not plastic. The introduction of acetylene tetrachloride as an acetate solvent,[1] acetanilid,[2] phenol or acetamid,[3] and especially producing bodies of lower acetation which with camphor result in bodies of high plasticity,[4] have opened new fields as competitors of celluloid where cost of production is of secondary consideration. The methods of manufacture have recently been greatly improved as regards controlling the various steps of acetation in order to produce bodies of satisfactory solubility in alcohol, ethyl acetate and the other cheaper solvents. Benzene,[5] carbon tetrachloride,[6] nitrobenzene,[7] and toluene[8] are some of the diluting and inhibiting agents introduced in the acetating mixture in order to keep down the temperature, and enable controllable products to be prepared.

1. Wohl, D.R.P. 139669, 1899; L. Lederer, U.S.P. 804960, 1905, E.P. 6751; 1905; F.P. 352897, 1905; abst. J.S.C.I., 1905, **24**, 978.

2. W. Walker, U.S.P. 774713, 774714, 1904; See "Recent Development in the Chemistry of Cellulose," Jour. Frank Inst., 1907, **164**, 131; Text. Col., 1907, **29**, 242.

3. L. Lederer, U.S.P. 774667, 1904; Addition dated Aug. 22, 1902, to F.P. 319724, 1902; abst. J.S.C.I., 1903, **22**, 563.

4. See Cellit.

5. H. Mork, U.S.P. 854374, 1907.

6. L. Lederer, U.S.P. 902093, 1908.

7. C. Weber and C. Cross, U.S.P. 627031, 1899; Dan. P. 2636, 2558, 1899; Lux. P. 7610, 1898; Port. P. 2899, 2930. 1899; Russ. P. Aug. 14, 1898; Oct. 14, 1898. Cross, Weber and Frankenburg, U.S.P. 632605, 1899; E.P. 18283, 22029, 1898; Can. P. 62188, 63101,1899.

8. R. Strehlenert and F. Reubold, U.S.P. 812098, 1906. The nature of their invention is illustrated by the following three methods of preparation recommended:

Example 1. Mercerize 100 parts of purified cotton-wool by means of caustic soda, wash it free from alkali, and press it until it contains from about 10–20% of water, and then introduce it into a mixture of 400 parts of acetic anhydride, 1½ parts of concentrated sulphuric acid, and 1,500 parts of benzene, and heat the whole gradually in a vessel provided with a reflux condenser to a temperature of 70–75° and maintain it at this temperature until a test portion of the product is completely soluble in chloroform. The acetylated cotton-wool can be pressed and washed free from the acetylating liquid and then dried. The acetylated cellulose so obtained is soluble in chloroform, aniline, glacial acetic acid, and hot nitrobenzene.

Example 2. Heat 10 parts of dry cotton-wool with a mixture of 50 parts of acetic anhydride, 2.5 of concentrated sulphuric acid, and 150 parts of toluene at a temperature of 70–80°. As soon as a test portion is soluble in chloroform the acetylation is complete, and the product can be separated off, pressed, washed, and dried.

The acetylcellulose resembles cotton-wool in appearance, but has a hard feel and is brittle. It is soluble in chloroform and in acetone and insoluble in water.

Example 3. Soak 100 parts of cotton-wool in dilute sulphuric acid containing about 6% H_2SO_4, and then press the cotton-wool until about 10 parts of the dilute acid remain in the press-cake. Introduce the cotton-wool so treated into a mixture of 300 parts of acetic anhydride and 1,100 parts of benzene. Shake this frequently for a period of about twelve hours, and then heat the whole in a reflux apparatus on the water-bath at a temperature of 60–65° until a test portion is soluble in chloroform. Then press off the acetylated cellulose, remove the excess of acid by means of warm dilute sodium carbonate solution, wash and dry.

Chemistry. The chemistry of the cellulose acetates has not been as exhaustively investigated as with the corresponding nitrates. Accepting the formula of cellulose in its simplest terms ($C_6H_{10}O_5$) the mono-, di-, and tri-acetyl derivatives would possess the formulas

$$C_6H_9O_4(O\cdot CO\cdot CH_3),\quad C_6H_8O_3(O\cdot CO\cdot CH_3)_2,\quad C_6H_7O_2(O\cdot CO\cdot CH_3)_3,$$

respectively. All are white, amorphous, friable powders, without smell or taste, insoluble in water, methyl, ethyl or amyl alcohols, partially soluble in anhydrous acetone, which solubility increases with the previous hydration of the cellulose; i.e., acetylhydrocellulose is more soluble in absolute acetone than is acetylcellulose. Methyl, ethyl and amyl acetates are without dissolving effect on the normal acetic esters, but a mixture of ethyl acetate and alcohol is the preferred solvent for certain hydroacetylcelluloses prepared according to the method of Eichengrün and Becker. All are insoluble in aniline, toluidine, xylidine, pyridine and quinoline, soluble in absolute formic [1] and acetic acids, the solubility rapidly diminishing with introduction of small amounts of water into the acids. Phenol, cresol, chloroform and tetrachlorethane are excellent solvents, carbon tetrachloride less so. All are less inflammable than cotton cellulose, non-explosive, react with alkalis with difficulty (see cellulose tetracetate), and are deposited from solutions in a transparent or opalescent, but brittle state. Like the cellulose nitrates, they may be made plastic by camphor and other bodies. Chloroform,[2] acetylene tetrachloride and a

1. A. Schloss, U.S.P. 922340, 1908. A marked advantage claimed for formic acid as a solvent is that a thread (in the spinning process) of sufficient strength is at once produced when the solution is squirted into an aqueous precipitating bath of suitable character. The rapid action is believed by the patentee to be due to the fact that the skin formed upon the surface of the filament as soon as it enters the precipitating bath is readily penetrated by formic acid and water, so that the coagulation process rapidly extends into the interior of the thread, thus imparting the necessary strength.

2. The degree of viscosity of a chloroformic solution of cellulose acetate is an accurate criterion of its commercial value, as the greater the hydrolysis which has taken place the more fluid becomes the chloroformic solution. When the solutions are placed on glass plates and allowed to spontaneously evaporate, this becomes more apparent. An acetate which is but little decomposed gives a film of great transparency and considerable toughness, whereas when acetylation has been accompanied by hydrolysis, the film obtained, although transparent, is brittle. When acetylcellulose is saponified, the acetyl groups are removed and cellulose regenerated. From a normal derivative, a cellulose results which in appearance resembles the original except in structure. On the other hand, from a hydrolyzed acetate, the cellulose yield is very small, and the residue differs most markedly from the original cellulose in possessing strong reducing properties.

By reaction alone with acetic anhydride, the monohydrate (C_6), insoluble in all neutral solvents and the solvents of cellulose, is formed at 110°. At 140–160°, acetates are formed which redissolve in the reacting mixture. When the reacting mixture is diluted with a hydrocarbon, fibrous cellulose may be acetylated without visible structural change.

mixture of ethyl acetate and alcohol are the usual commercial solvents, in which mixtures of cellulose and hydrocellulose acetates are brought into solution. Nitromethane,[1] penta- and hexa-chlorethanes have been proposed as solvents, the latter two of which are inefficient. The solubility may vary within wide limits without apparently changing the percentage composition of the resulting acetate, by varying the length of time of acetylation and the degree of hydrolysis to which the cellulose is subjected by varying the dehydrating agent used. Therefore statements in the literature as to the solubility of these acetates are often misleading and contradictory. Being highly viscous, the cellulose acetates, like the corresponding nitrates, are filtered with difficulty unless highly diluted. Apparently the stability in solution may be materially increased, as shown by E. Knoevenagel.[2] All cellulose acetates are readily saponified by boiling alcoholic potash, but this method does not give accurate quantitative results with the esters of cellulose, as with the esters of the simpler alcohols.[3] From the investigations of De Mosenthal [4] it appears that cellulose

1. Use patented by E. Fischer, D.R.P. 201907, 1907; for process of manufacturing acetyl chloride, see M. Mugdin, U.S.P. 944372, 1909; D.R.P. 171146; see also G. Rauter, Ann., 1892, **270**, 260.

2. He has shown (Chem. Zeit., 1908, **32**, 810) that when cellulose is acetylated in presence of sulphuric acid, solutions of acetylcellulose are obtained which, after days or weeks, according to the quantities of reagents employed, undergo a considerable change, characterized externally by the fact that the solutions which are first viscous become mobile. If, on the other hand, the acetylation is conducted in presence of inorganic salts, especially of sulphites and sulphates, for instance of ferrous sulphate, viscous solutions of very great stability, which can be spun into threads, are obtained. The fibers of acetylcellulose can be dyed in the usual manner, after suitable preliminary treatment, such as softening with alcohol.

3. The reason probably being that during the time required to split off the acyl groups, the cellulose molecule itself suffers disintegration under the influence of the alkali with the result that acidic products are formed. This accounts for the abnormally high saponification numbers, and it was on account of not appreciating this fact that the analytical figures of certain analyses erroneously indicated the presence of a cellulose tetracetate, and pentacetate (Cross and Bevan, J.C.S., 1890, **57**, 2).

A normal cellulose ester ought upon saponification to regenerate the cellulose and fatty acid as smoothly and quantitatively as is the case with the fats and oils. Should the cellulose molecule have been broken down, however (hydrolyzed), during the progress of the acetylation, we should expect to find a higher saponification value, and the residue should differ widely, both in its chemical nature and in quantity, from the cellulose originally taken. However, in those cases where, from the nature of the acetylizing process, such a decomposition may be expected, it will generally be found that an unusual quantity of alkali is used up in the saponification, and that, owing to the high degree of hydrolysis, the yield of regenerated cellulose is much below the theoretical. This cellulose, instead of being indifferent, has acquired strong reducing properties, and when warmed with Fehling's solution causes a precipitation of cuprous oxide.

4. J.S.C.I., 1907, **26**, 444. See also H. Ost, abst. J.S.C.I., 1906, **26**, 606; Z. ang. Chem., 1906, **19**, 993; Ber., 1899, **32**, 2413; Mon. Sci., 1908, **22**, 465. In a recent process (F.P. 409465, 1909; E.P. 27102, 1909) for preparing acetylated derivatives by the direct transformation of natural cellulose, V. Pauthonier takes the latter in the form of cotton, paper, etc., and treats with a mixture of acetic anhydride and a conjugated aliphatic sulphonic acid, new acetyl-sulphoaliphatic acid

mono- and tri-acetate resemble the higher cellulose nitrates in appearing blue when examined microscopically by polarized light. The triacetate is the technically valuable ester, and in commercial methods of preparation it is usually the triacetate which is aimed at, whether specifically so stated or not. The triacetate is always contaminated with diacetate, and similarly with the nitrates, there is no record of a perfectly pure ester having, as yet, been produced. Acetylated oxycellulose,[1] cellobiose (cellose), and allied derivatives have been described, but are of no industrial importance. A characteristic reaction of the cellulose acetates is their solubility in hot nitrobenzene,

esters of cellulose being thus formed. The products are white, soft to the touch, and when compressed have a spongy appearance; they are soluble in glacial acetic acid, chloroform, and acetone, and are said to be suitable for the production of photographic films and for other purposes, and for the replacement of nitrocellulose in the production of celluloid. According to the proportion of the ingredients employed, substances of varying degrees of plasticity and solubility are obtained. As an example of the method of manufacture, 162 gm. of dry cotton are treated with 460 gm. of acetic anhydride, 600 to 700 gm. of glacial acetic acid, and from 5–50 or more gm. of sodium sulphoricinate, together with sufficient free sulphuric acid to liberate the sulphoricinic acid. The glacial acetic acid acts as a diluent only. The operation is best conducted by first adding the glacial acetic and sulphuric acids together with a little of the acetic anhydride, and then gradually adding the remaining constituents, with thorough mixing, after the reaction has started, in order to avoid heating. The mass is kneaded for some time and allowed to stand for twelve to eighteen hours. The reaction is completed when a sample, after washing and drying, is soluble in acetone. The mixture is then filtered, and the substance precipitated by adding water, treated with sodium carbonate, washed, and dried.

1. Skraup and König (Ber., 1901, **34**, 1115; abst. J.S.C.I., 1901, **20**, 740; 1902, **21**, 144) obtained from cellulose, by heating it with acetic anhydride and concentrated sulphuric acid, a crystalline acetyl compound called octa-acetylcellobiose, melting at 227–228°, which on saponification yielded a biose, cellobiose. By the action of hydrochloric acid on the acetyl compound, an acetochloro-compound was produced, from which, on replacing the chlorine by acetyl a new acetyl compound was obtained of m. pt. 200°, isomeric with the compound mentioned above. Geinsperger (Monat. Chem., 1905, **26**, 1459), who prepared the acetochloro-compound directly from cellulose, was unable to obtain a biose from the acetyl compound of m. pt. 200°. Subsequently, Maquenne and Goodwin (Bull. Soc. Chim., 1904, **31**, 854) obtained an acetyl compound melting at 196° by heating cellobiose with sodium acetate. This compound was easily saponified, with reproduction of the biose, and on warming with concentrated sulphuric acid was converted instantaneously into the acetyl compound melting at 228°. E.R. v. Hardt-Stremayr (Monat. Chem., 1907, **28**, 73, 78) has repeated some of the experiments mentioned, and finds that Geinsperger's acetate (m. pt. 200°) and Maquenne and Goodwin's acetate (m. pt. 196°) are identical. The true melting-point is 198°, and the compound is easily saponified, with formation of cellobiose. Attempts to convert the acetate melting at 228° directly into its isomeride melting at 198° proved unsuccessful. The yields of acetyl compound from the different oxycelluloses varies, however. Pure cellulose yields about 25% of acetyl compound, as also does hydralcellulose, G. Bumcke and R. Wolffenstein, Ber., 1899, **32**, 2493; (abst. J.S.C.I., 1899 **18**, 940). The oxycelluloses prepared by the action of nitric acid and of potassium chlorate and hydrochloric acid respectively, on cellulose, O. Faber and B. Tollens, Ber., 1899, **32**, 2589; J. Murumow, J. Sack, and B. Tollens, Ber., 1901, **34**, 1427; (abst. J.C.S.I., 1899, **18**, 1014; 1901, **20**, 739), yielded 16% and 10% of acetyl compound. Acid cellulose (abst. J.S.C.I., 1899, **18**, 940) yielded only 7% of acetyl compound. The author concludes that oxycelluloses contain cellobiose groups, but in less quantity than ordinary cellulose.

from which they gelatinize out on cooling. The technology of the cellulose acetates has recently been greatly forwarded by investigations on the function of the various hydrolyzing and catalytic agents proposed, and the proportion of acetyl hydrocellulose present with the normal esters.[1]

Methods of Manufacture. As the method of direct treatment of cellulose with acetic anhydride and glacial acetic acid, with or without acetyl chloride, is but of theoretical value and is not used indusdustrially, there may be said to be but two general methods of preparation; (*a*) The most important, that of producing hydrocellulose from the cotton and then acetylating this. The hydrocellulose may be produced as a distinct and previous operation, or more often addition of sulphuric acid and other dehydrating agents causes the formation of hydrocellulose in the acetating mixture. At the present time the products are regarded as acetohydrocelluloses rather than cellulose acetates. (*b*) Production from some form of regenerated cellulose, as that obtained from viscose or from ammoniacal copper oxide cellulose solutions.

In any method, the cotton is rendered absorbent by removal of fat and wax by scouring, bleaching, etc., in the same manner and with as great care as for the preparation of the nitrates. Immersion in the acetating mixture may be continued until the product is soluble without turbidity, or the process may be stopped before completion of acetylization, when bodies readily soluble in ethyl acetate, acetone and even ethyl alcohol result, and hence much less expensive solvents than the chloroform formerly used exclusively, may be employed. Such partially converted celluloses are also capable of the formation of plastic products with either camphor or acetylene tetrachloride,

1. Cross, Bevan and Briggs (Ber., 1905, **38**, 1859, 3531) have discovered that by the joint action of acetic acid, acetic anhydride, and sulphuric acid on cellulose, mixed acetic and sulphuric esters result. For the preparation of what they term the normal cellulose aceto-sulphate to which the formula $4(C_6H_7O_2)(SO_4)(C_2H_3O_2)_{10}$ is ascribed, 16 gm. dry cotton are stirred for twenty minutes at 30° in 100 cc. of a mixture of equal parts glacial acetic acid and acetic anhydride containing 4–5% by weight of sulphuric acid. After standing for an hour a homogeneous, translucent, and viscous solution is obtained, which precipitates on being poured into water as a semi-translucent gelatinous hydrate, soluble in alcohol. At high temperatures, especially in presence of water, the product is liable to turn black in consequence of the liberation of free sulphuric acid.

By using less sulphuric acid in the preparation, a product was obtained which was insoluble in alcohol.

The sulphuric acid contained in the new esters is remarkably stable toward alkaline saponifying agents, but is readily affected by water. The air-dried substance retains 8% of moisture.

The existence of a compound containing cellulose and sulphuric acid in the proportion $4C_6H_{10}O_5$ to H_2SO_4 is put forward as a proof that in its reactions cellulose behaves like a complex of at least 24 atoms of carbon. See also Cross and Bevan, Ber., 1901, **34**, 2496; Chem. Zeit., 1905, **29**, 527.

as will be subsequently described. To modify and control the speed of acetation, certain non-reacting diluents as inhibiting agents may be added to the acetating mixture, benzene, benzine, toluene, xylene, mono-chlorbenzene, benzyl chloride, benzal chloride, anisol, phenetol, and fatty acid esters as acetic ester and ethyl acetoacetate.[1] Very recent experiments appear to show that a much superior product results by allowing the partially acetated cellulose to remain immersed for a period of twenty-four hours or longer and at a lower temperature. The speed of acetation is governed by the amount of moisture present, nature and concentration of the dehydrating in catalytic agent employed, previous treatment of the cellulose, and temperature of and length of immersion in the acetate bath.

Where the reaction is allowed to proceed until entire solution or chloroform results, the diacetate appears to be first formed, then the triacetate, as indicated by the increased solubility in chloroform. The present centers of manufacture are: Furst v. Donnersmarck Kunstseide und Acetatwerke, Farbenfabriken vorm. Friedr. Bayer & Co., in Germany, and in the United States at the Eastman Kodak Company, Rochester, General Electric Company, Lynn, Mass., and in the neighborhood of Boston.

Manufacture with Dehydrating Agents is, perhaps, as definite a general classification as is possible. The methods all probably first transform the cellulose into hydrocellulose, so that the ester is, in part at least, an acetohydrocellulose.[2] Although cellulose is usually classed among the chemically inert individuals, this is not the case, however, as is shown by the extreme care exercised in the

1. E. Knoevenagel, Chem. Zeit., 1908, **32**, 810; see Knoevenagel and H. Lebach, U.S.P. 891218, 1908; F.P. 373994, 1907.

2. G. Büttner and J. Neuman (Zeit. ang. Chem., 1908, **21**, 2609) record that when cellulose is treated with diluted sulphuric acid, of sp.gr. 1.453–1.53, a mixture is formed consisting probably of hydrocellulose and oxycellulose together with unchanged material. Under special conditions (using acid of only 3–4% strength), however, cellulose hydrates are formed of the general formula, $(C_6H_{10}O_5)x,H_2O$, (three preparations were obtained in which $x=2$, 3, and 6), hydrocellulose of this composition, whether $x=2$, 3, or 6, is a white sandy powder extremely resistant toward acids and alkalis. It is usually not changed by boiling with dilute sulphuric acid, but further experiments are necessary in order to ascertain whether the one stage of hydration may not be changed into another by this treatment. It is dissolved by cold concentrated sulphuric acid or fuming nitric acid, but it is only colored yellow on boiling with caustic potash or soda in an ammoniacal solution of copper oxide. When hydrocellulose is treated with acetic anhydride and concentrated sulphuric acid added, a vigorous reaction ensues and the substance dissolves. On dilution with water an acetyl derivative is precipitated in white to blue opalescent flocks. Hydrocellulose is colored blue with zinc chloride-iodine reagent or iodine and potassium iodide solution, and it reduces Fehling's solution and ammoniacal silver nitrate. Girard's statement that hydrocellulose is readily oxidized even at 50° cannot be maintained, for the pure substance remains unchanged at 100°. If, however, traces of sulphuric acid are present, it is soon decomposed on warming.

preparation and treatment of cotton in the textile industries, especially in bleaching and dyeing, where extreme care is taken that the cellulose fiber is not too severely attacked (tendered). As in the nitration of cellulose, acetylation may be much more readily carried out in the presence of a dehydrating agent of considerable strength. Landsberg [1] has described a process whereby hydrocellulose or oxycellulose is heated with acetic anhydride and 1% ortho-phosphoric acid to 40–80°, or where meta- or pyro-phosphoric acids are used, the temperature may be lowered to 25–50°. With phosphorus pentoxide [2] a temperature of 50° is claimed to give best results. Balston and Briggs [3] prefer phosphorus oxychloride or pentachloride. Sodium acetate has been proposed,[4] but as has been pointed out [5] this salt does not give satisfactory results because it is impossible to obtain it in the anhydrous state, except upon heating to a temperature sufficiently high to decompose cellulose. Potassium acetate is no better, ammonium acetate changes to acetamide, but magnesium acetate, which may be freed of its moisture at a temperature below 100°,[6]

1. E.P. 4886, 1902; F.P. 316500, 1901; Aust. P. 17456, 1902; D.R.P. L-15737; where oxycelluloses are employed, sulphuric acid instead of phosphoric acid is advocated. To produce oxycelluloses suitable for this purpose, action of cellulose with potassium chlorate and hydrochloric acid and conducting a constant current of chlorine into a heated mixture of finely divided cellulose, calcium carbonate and water is suggested.

2. F.P. 316500, 1901. In the process of the Badische Aniline Company (E.P. 24083, 1904; F.P. 347906, 1904) the solution of the acetylcellulose is prevented by carrying out the reaction in presence of a sufficient quantity of some liquid in which acetylcellulose is insoluble (e.g. ether or benzene). The acetylation proceeds more rapidily if the cellulose (cotton, mercerized or not, wood, paper, etc.) is first damped; it may be impregnated with dilute sulphuric acid to obviate the necessity of introducing the latter into the solution. The sulphuric acid may be replaced by organic sulphonic acids, or by phosphoric acid. One of the advantages of this process is that it enables cotton in the form of flock, yarn, or fabrics to be acetylated without altering its appearance. The following is an example of the process: 10 k. of dry degreased cotton are heated in a mixture of 50 k. of acetic anhydride containing 5% of sulphuric acid and 150 k. of toluene, at a temperature of 70°–80, wrung out, washed and dried.

3. E.P. 10243, 1903. Best results are obtained by mixing with 10 parts cotton, 30 of acetic anhydride, 30 glacial acetic acid, 17 phosphorous oxychloride, all in a stoppered container, and heating to 55° for seven to eight hours with occasional stirring, until a small portion taken out is completely soluble in chloroform or phenol. It is claimed the product so obtained possesses great flexibility and tenacity, and offers considerable resistance to both hot or cold water.

4. Skraup and König, Ber., 1901, **34**, 1115.

5. F. Marsden, Jour. Dyers and Col., 1905, **21**, 104; Färber Ztg., 1906, **42**, 172.

6. Cross and Bevan, U.S.P. 530826, 1894; D.R.P. 85329, 1895; 86368, 1896; F.P. 243546, 1894; Ber., 1896, **29**, 312, 461; "Researches on Cellulose," 1900–05; in their E.P. 9676, 1894, zinc acetate is used; abst. J.S.C.I., 1895, **14**, 987. In J.C.S., 1890, **57**, 1, in the course of investigations on the constitution of the lignocelluloses (J.C.S., 1889, **55**, 199) action of acetic anhydride on jute was studied, and on boiling purified cotton for sixteen hours with acetic anhydride containing a trace of zinc chloride in solution, the whole of the fiber had disappeared, and on pouring the solution into water a copious precipitate was obtained, which, after washing and drying, gave on hydrolysis a quantity of acetic acid equivalent to 80% of the substance. In a subsequent patent (D.R.P. 224330, 1907) Cross and Bevan produce

has been found satisfactory. Calcium acetate is said to give erratic yields.[1]

Sulphuric acid is the least expensive and probably most used dehydrating agent for the formation of hydrocellulose, the commercial grade of 66° Bé. strength being usually employed.[2] With the

cellulose acetate from cellulose without altering the structure or the appearance of the fiber or the fabric, with acetylizing agents and zinc chloride. The cellulose is treated with less than 1.5 times its weight of acetic anhydride, the zinc chloride being preferably added in the proportion of 4–10% of the reaction mixture.

1. According to their method, the moist regenerated cellulose is impregnated with the aqueous solution of magnesium and zinc acetates, even penetration being assured by mixing intimately. The mixture is carefully dried, and ground to an impalpable powder. Upon treatment with acetyl chloride and acetic anhydride a reaction takes place which may be represented as follows:

$$2C_6H_{12}O_6+Mg(C_2H_3O_2)_2+(CH_3CO)_2O+2CH_3COCl= 2C_6H_9O_3(C_2H_3O_2)_3+MgCl_2+3H_2O.$$

The equation is calculated upon the supposition that a tri-acetyl derivative is formed. See W. Walker, Jour. Frank. Inst. 1907, **144**, 136. In carrying out the operation 304 parts by weight of the magnesium acetate-cellulose mixture is mixed with 157 parts acetyl chloride and 30–50 parts acetic anhydride, left to stand until the temperature has risen to 50°, when the appearance changes from a moist sandy powder to a semi-fluid mixture. The rise in temperature is controlled by the addition of small amounts of nitrobenzene, incorporating each addition thoroughly, that the temperature may be kept as near 50° as possible. This is important, for with too great a rise in temperature, the cellulose undergoes hydrolysis, and the yield is low and quality poor. On the other hand, a fall in temperature results in incomplete acetation. Nitrobenzene, being a solvent of the acetate, acts in the capacity of a diluting agent as well as temperature regulator, and as the produced acetate dissolves, new surfaces of cellulose are exposed to the acetating process. The amount of nitrobenzene is increased as the reaction increases, so that finally an almost complete solution in the solvent results. The viscous solution is then run into alcohol, continually agitated, and the precipitated acetate well washed with water until a neutral reaction is obtained. The nitrobenzol is freed by distilling with steam, the blocks are pressed and finally dried. Purification is effected by solution in dilute phenol and precipitating by running into weak alkali solution. The washed and dried product is then dissolved in chloroform, and is ready for use. Difficulty has been found in regulating the temperature by this method, which Wohl (D.R.P. 139669, 1899) sought to overcome by the replacement of the magnesium-zinc acetate by pyridine. Sthamer (Aust. P. 8171, 1902; D.R.P. 123122; Jour. Dyers and Col., 1901, **16**, 246; Zeit. ang. Chem., 1901) proposed treatment with acetyl chloride and a little sulphuric acid at 70° until the product became completely soluble in acetic acid. See D.R.P. 184185, 1904; Badische Aniline Company, D.R.P. 184145, 184201, 1904; Russ. P. 11492, 1907.

2. Knoll & Company, F.P. 369123, 1906; 383636, 1907; abst. J.S.C.I. 1909, **28**, 1194; First Addition, dated April 16, 1908 to F.P. 376578, 1907; abst. J.S.C.I., 1907, **26**, 988. D.R.P. 180667, 1905 Addition to D.R.P. 180666, 1905; D.R.P. 201233, 203642, 1906; F.P. 412503, 1910; E.P. 3559, 1910. In First Addition dated Apr. 16, 1908 to F.P. 376578, 1907, abst. J.S.C.I., 1907, **26**, 988, the claim is made that they are able to regulate the dehydrating action of sulphuric acid by the addition of a nitrate as ammonium nitrate—equivalent to the quantity of sulphuric acid present—the liberated nitric acid acting as a bleaching agent upon the cellulose, with which it combines to form a mixed ester. Or (F.P. 373994, 1907) addition of 0.1–0.3% of such catalysts as ferrous sulphate, hydrated ferric chloride, zinc chloride dimethylamine chloride or diethylamine sulphate, the temperature of reaction being 70°. See also their D.R.P. 122033, 1906; 201910, 1907; Addition to D.R.P. 196730, 1906; D.R.P. 206950, 1907; Addition to D.R.P. 203178, 1906; E.P. 7743, 1909. According to H. Dreyfus (F.P. 413671, 1910) and Dreyfus and L. Schneeberger (F.P. 413671, 1910) cellulose acetate is prepared by the action of

methods of L. Lederer [1] cellulose is acted upon simultaneously by sulphuric acid and acetic anhydride, with and without glacial acetic acid, the cellulose being both hydrolyzed and acetated. In order to separate the esterized cellulose from solutions in the reacting mixtures, liquids which do not dissolve cellulose, as water or alcohol, may be used, but if it is desired to recover the glacial acetic acid and acid anhydride, water dilutes the acid and combines with the anhydride, while alcohol combines with the glacial acetic acid in presence of the dehydrating agent, sulphuric acid and ethyl acetate being formed.[2]

acetic anhydride on cellulose or its derivatives, in presence of lead chamber crystals as a catalyzing agent. The acetylating mixture may be diluted with liquids which may be solvents or non-solvents of the product. Cellulose formate may be prepared by the action of formic acid in a similar manner, and it is stated that esters of other acids of the fatty series may also be produced. Lead chamber crystals are claimed to have a more specific influence in favoring the esterification than free sulphuric acid. Example: 10 parts of cellulose are treated with a mixture of 35 parts of acetic anhydride, 30 of glacial acetic acid and 0.5 of lead chamber crystals; the reaction proceeds gradually at a relatively low temperature.

1. U.S.P. 954310, 1910; (Original application filed May 29, 1902, Serial No. 109566. Divided and this application filed Mar. 29, 1905. Serial No. 252673.) E.P. 11749, 1900; 7088, 11164, 1902; 7341, 1903; 7346, 19107, 1906; 3103, 1907; F.P. 320885, 1902; 371358, 1906; D.R.P. 118758, 120713, 1901; Jour. Dyers and Col., 1901, **17**, 238. In U.S.P. 654988, 1900; D.R.P. 118538, Lederer proceeds by treating cellulose with 3% sulphuric acid for some minutes, then heating to about 70° in a closed receptacle for about three hours, after which it is pressed and dried. The mass is then poured into four volumes of acetic anhydride. The reaction takes place in a short time with evolution of heat. After its completion the product is washed with water, the acetylcellulose upon drying appearing as a gravelly powder soluble in chloroform and nitrobenzene. If the hydrocellulose has not been obtained by Girard's process by means of sulphuric acid, but by another process without the aid of sulphuric acid, a small amount of sulphuric acid—about $\frac{1}{4}$ to $\frac{1}{2}$% of the weight of the anhydride—must be added to the acetic anhydride for acetylization, because without presence of sulphuric acid acetylization by means of acetic anhydride does not succeed at a low temperature. For superficially acetylating cellulose fabrics Lederer immerses the cloth (U.S.P. 954310, 1910) in acetic anhydride to which about 0.5% sulphuric acid has been added, and allowed to remain in the solution for about ten minutes. The fabric, thus provided with a more or less thick surface-coating of cellulose acetate, is then removed from the solution and freed from the absorbed acid by washing with water.

2. In U.S.P. 902093, 1908, L. Lederer records that carbon tetrachloride is suitable as a diluent to lower the temperature of reaction and to enable the acetic acid and anhydride to be subsequently recovered. Besides being uninflammable, its boiling point is substantially different from that of either acetic acid or acetic anhydride, which facilitates their separation by simple distillation. By the use of carbon tetrachloride, the inventor claims, it is practicable to effect the separation of the mass produced by the esterification in open vessels, and consequently to dispense with special apparatus. Whereas carbon tetrachloride is a non-solvent for cellulose acetates, the near related bodies, chloroform, ethane tetrachloride and dichlorhydrin, are direct solvents. The carbon tetrachloride is added to the reaction mass with careful stirring, until a thick, uniform paste has been formed. The paste is pressed, and if necesary the solid residue again stirred with tetrachloride and the mixture pressed as before. The mass is then washed with water until neutral and dried. See also D.R.P. 185151, 1906, and F.P. 371356, 1906 In F.P. 371357, 1906, a method for preserving the viscosity of the solution is given. By heating hydrocellulose, acetic anhydride and sulphuric acid to 60–70°, he obtains a product soluble in ether as well as in chloroform. See also D.R.P. 175379, 1904; 179947, 1905; 210778, 1906; F.P. 319724, 1902; 368766, 1906; 374370,

Miler describes the preparation of cellulose acetate partially soluble in acetone [1] by using a large excess of acetic anhydride.[2] In the presence of relatively small quantities of zinc chloride at temperatures between 125–140°, cellulose and acetic anhydride react to the triacetate, but at higher temperatures the tetracetate is said to have been formed. In order to eliminate the sulphuric acid used to induce the change from cellulose to hydrocellulose, Mork, Little and Walker [3] propose the use of phenolsulphonic acid and its salts, especially sodium phenolsulphonate. The tendency to degrade the cellulose esters of fatty acids during their formation where sulphuric acid is used [4] is entirely obviated, so the inventors claim, by employing the sulphonic acids in the manner they describe. M. Althausse [5] obtains acetyl hydrocellulose soluble

1907; D.R.P. 163316; Aust. P. 33508. For acetylated nitrocellulose, see Lederer, D.R.P. 179947; Aust. P. 34272, 1908.

1. F.P. 358079, 1905; E.P. 14255, 1906. Dry cotton, 170 gm., glacial acetic acid, 680 cc., sulphuric acid, 7 cc., are mixed and allowed to stand for one hour. Acetic anhydride, 470 cc., is added, and when the solution is clear there is added 100 cc. of an acid solution, containing water 90%, and sulphuric acid 10%. After standing ten to twelve hours, precipitation is effected by water, and the precipitate washed and dried. The cellulose ether product is soluble in chloroform and slightly in acetone.

2. U.S.P. 734123, 1903; 790565, 1905; 809935, 1906; F.P. 317007, 1901; Zeit. Text. Chem., **11**, 423; E.P. 21628, 1901; 7346, 1903.

3. U.S.P. 709922, 1902. For every 100 parts of cellulose, as cotton, there are taken 350 parts of acetic anhydride, 5 parts phenolsulphonic acid, and 5 parts sodium phenolsulphonate. About 150 parts glacial acetic acid are added to dilute the mixture.

4. See C. Schwalbe, latter portion of this chapter on the question of free sulphuric acid in this method.

5. In U.S.P. 679203, 679204, 1901; D.R.P. 123121, 123122; U.S.P. 692497; D.R.P. F-12805, is described a method of preparing hydrocellulose commercially by treating cellulose with free chlorine containing a small amount of glacial acetic acid to 60–70°. About 100 parts of the product thus obtained are mixed with 350 parts glacial acetic acid, and to this mixture are added 350 parts acetyl chloride. Energetic action ensues, heat is evolved and HCl split off. As soon as the reaction moderates, a small quantity of concentrated sulphuric acid is added to the mixture and the latter thoroughly mixed and heated to 60–70°. The splitting off of the HCl continues, and this has for its result the formation of a thick pulp, which is kept for a short period of time at a temperature of from 65–70° until the mass has lost its pulpy character. From this reaction product, which is now in a liquid state, the acetyl hydrocellulose is precipitated by means of water. It is soluble in acetone and alcohol, but cannot be precipitated therefrom with water even when the solution is considerably diluted with water. The acetyl derivative obtained by evaporating a solution is also insoluble in water. It is, however, possible to separate the whole of the acetyl derivative even from highly diluted solutions by salting it out with a comparatively small amount of common salt. In a later patent (U.S.P. 692497, 692775, 1902) is described certain acetylcellulose derivatives which possess properties of great importance for technical purposes, among others, for the production of lakes. In producing lakes a solution of the acetylcellulose in alcohol, for instance, is dyed with a suitable dye or coloring matter. It is then diluted with water and finally salted out by adding a small quantity of finely pulverized common salt. As the acetylcellulose in a moist state is very voluminous, a copious precipitate can be obtained even from a highly diluted solution. The lakes thus obtained are said to possess, in contradistinction to the lakes precipitated by means of metallic salts, the advantage of being absolutely insoluble in water after drying, of being transparent or nearly transparent

in acetone and alcohol, from solutions in which it cannot be precipitated with water until highly diluted. By the use of sulphuric anhydride (sulphur trioxide), G. Miles[1] employs glacial acetic acid containing from ½–1% of water, using only enough of the trioxide to combine with the water present in the acetic acid and thus form sulphuric acid.[2] Instead of glacial acetic acid, monochlor-, dichlor- and trichlor-acetic acids in conjunction with cellulose and acetic anhydride, have given best results in the hands of the Berlin Aniline Company.[3] A suitable diluent, as benzine, is added to the mass in order to better keep the process under control. The union of cellulose and acetic anhydride may be facilitated, according to A. Corti,[4] by treating

when applied in a thin layer, and of showing a fresh sparkling color. See also Ulzer, Acetylhydrocellulose, Mith. Gew. Mus., 1905, **15**, 241.

The property of the acetyl derivatives of producing combinations with coloring matters in soluble lakes gives them a value as dyes or for printing fabrics, such as cloth, or for color-printing on paper. When fabrics are first treated with an alcoholic or aqueous-alcoholic solution of the acetylcellulose and are then treated with a suitable coloring matter or dye, a better diffusion or distribution of the color on the fibers is obtained, and the fibers retain the color more firmly.

Concentrated alcoholic solutions of the acetylcellulose when dyed with artificial coloring matters are well adapted for printing on paper.

1. U.S.P. 733729, 1903; 838350, 1907; the quantity of acetic acid taken is preferably only sufficient to thoroughly moisten the cellulose treated. To the acetic acid thus prepared acetic anhydride is added in quantity sufficient to form cellulose tetracetate with the cellulose first taken. The whole is then mixed together to form a moist pulp. The object in the employment of the theoretical equivalent of anhydride necessary to the formation of the tetracetate, insures a practically sufficient excess over the chemical equivalent requisite theoretically to the formation of the triacetate, so as to initiate and accomplish the formation of an ester in which the triacetate is largely preponderant. The reaction, which is accelerated by moderate heating, and if the temperature of the reacting mass is raised to about 70°, is complete in about two hours. It is desirable on completion of the reaction to remove the ester from further contact with the esterifying reagents, which is most readily done by pouring the mass into a large volume of cold water. Miles has found that 1 part sulphuric acid to 400 parts acetic anhydride is sufficient to initiate the reaction and carry it to completion.

2. In G. Miles, U.S.P. 838350, 1906, the acetic ester is first produced, and then hydrated in a subsequent step, the method being as follows: 100 gm. cellulose, 40 gm. commercial acetic anhydride, 400 gm. glacial acetic acid, and from 10–20 gm. 95% sulphuric acid are allowed to react together. After the ester has been formed, instead of pouring the mass into a large volume of water, the mixture is introduced into the following: 95% sulphuric acid 10 parts, water 90, glacial acetic acid 100, using 40–45 gm. of total solution to each 100 gm. cellulose originally operated upon. The whole is mixed thoroughly by stirring, allowed to stand about twelve hours at 50°, when the acetate is precipitated out with water, neutralized, and dried, a fine powder being obtained which responds to the following tests: It is soluble in absolute acetone, plastic in chloroform and soluble in acetylene tetrachloride, insoluble in ethyl alcohol or water. A further peculiarity of this product is that if about 5% of water is added to the acetone (i.e., a 95% acetone be used) the product is soluble in the slightly diluted acetone, but the films are white and opaque, instead of being transparent, although flexible, tough, tenuous and waterproof. Although the acetate is soluble in 80% acetone, upon drying the films obtained are crackled and without strength.

3. E.P. 14255, 1906. The formula of H. Pontin and T. Tolputt is 10 parts of cellulose mixed with a solution of 90 parts of trichloracetic acid in 30 of acetic anyhdride.

4. U.S.P. 826229, 1906. In this process methylethyl- or diethyl-sulphates

30 parts of cellulose with a mixture of 70 parts acetic anhydride, acetic acid 120, and dimethyl sulphate 3 (parts by weight).

In the presence of sulphuric acid the action of acetic acid and anhydride on cellulose, especially that regenerated from viscose and ammoniacal copper oxide, is very energetic, considerable heat is developed, and if the reaction is allowed to proceed unchecked, the yield is much reduced, the cellulose degrading to the sugars—diglycose having been described as a sugar obtained in this manner. Furthermore many of the processes are open to the objection that the acetate is dissolved in the acetic acid or acetic anhydride used, and must be subsesequently precipitated to be recovered. Often a portion only is recoverable after the cellulose acetate has passed into solution in the reacting mixture, so the yield is uncertain and therefore unsatisfactory. If the reaction is carried out in the presence of a sufficient quantity of some non-reacting fluid and one in which cellulose acetate is insoluble (ether, benzene, benzine, toluene, etc.) the crude product does not lose the structural form of the original cellulose (if cotton), and separates in a crude state [1] which may be directly purified.[2] In a method proposed by H. Mork [3] disintegration of the

may be used instead. According to E.P. 9998, 1905; abst. J.S.C.I., 1905, **24**, 40; F.P. 345764, 1904; issued to Fab. de Prod. Chim., "Flora" cellulose 30 parts is heated with a mixture of acetic anhydride 70 parts, glacial acetic acid 120 parts, and dimethyl sulphate 3 parts, at the temperature of a boiling water bath, until complete solution is effected. The product agrees in composition and solubility with cellulose tetracetate. A different product which is soluble in acetone and alcohol can be prepared, it is said, by increasing the proportion of dimethyl sulphate to 15 parts.

1. In a search for lessening the cost of this product—the serious drawback to its more universal application—F. Bayer & Co. have succeeded in producing an ester soluble in alcohol. They find that the reaction takes place in two phases: First an acetate is produced which is soluble in alcohol, this product being then transformed by the further action of acetic acid and sulphuric acid into the triacetylcellulose, insoluble in alcohol. The action of acetic anhydride and sulphuric acid can be carried out in such a manner that the acetate soluble in alcohol is obtained as the chief product. For this purpose the process must be stopped when the alcohol-soluble body first produced begins to be transformed into the alcohol-insoluble acetate. A mixture of 89 each acetic acid and anhydride; 4 parts sulphuric acid, and 20 parts cellulose (cotton yarn), is allowed to stand at 20–25°, stirring from time to time, the mass being converted into a thick syrup, after standing about ten hours. When the precipitate obtained by diluting a test portion with water contains only a small quantity of unchanged cellulose, and is still soluble in hot alcohol, the production of the new cellulose acetate is completed. The reaction mass is then diluted with a large volume of water, the precipitate thus obtained filtered off, pressed, washed free from acid and dried. Thus prepared, it consists of hard, yellowish friable lumps. See also U.S.P. 838350, 1906.

2. See E.P. 24083, 1904; F.P. 347906, 1904; abst. J.S.C.I., 1905, **24**, 454; F.P. 383064, 1907.

3. U.S.P. 845374, 1907. A mixture is made of 400 parts of glacial acetic acid and 20 parts of benzolsulphonic acid. Into this is put 100 parts of high-grade bleached cotton roving. This is allowed to remain until it becomes perfectly and uniformly saturated by the liquid. The cotton is then squeezed or pressed until it retains approximately one-half the liquid first used. In other words the cotton now holds mechanically say 200 parts of glacial acetic acid and 10 parts

ester is practically eliminated by first producing a hydrocellulose which, instead of being friable and with no strength, is practically as strong as the original cellulose. This is then acetylated at a temperature of 15–20°, whereby danger of degradation of the ester—which takes place so readily at more elevated temperatures—is obviated.[1]

of benzolsulphonic acid. The cotton is allowed to remain in this condition at 15–20° for about twelve hours, at the end of which period it will be found to have been converted into a highly reactive modification of cellulose in which the original fibrous structure is still present. The second step in the process is carried out by preparing a mixture of 300 parts acetic anhydride and 1,200 parts benzol. In this the modified cellulose, made as above, and still containing about 200 parts of glacial acetic acid and 10 parts benzolsulphonic acid, is allowed to stand at room temperature for about eighteen hours. When the reaction is complete, as ascertained by removing some of the product and determining its solubility in chloroform or acetone or other appropriate solvent for the particular ester toward the manufacture of which the process has been directed, the ester is freed as far as possible from all liquor by "whizzing" in a centrifuge, and is then washed and dried.

Among the important advantages offered by this process may be enumerated the complete control which results from the moderation of the rate of esterification by reason of the low temperature at which the same is conducted coupled with the influence of the benzol, or its equivalent, in restraining the reaction; the ease of testing the progress of the process and of stopping it at any time desired; the large quantities of material which may be handled without endangering the quality of the product, and finally the ease of washing and drying the product in bulk. In another process he takes 100 parts hydrocellulose prepared by his patented method (U.S.P. 709922, 1902), and while still moist with the hydrolyzing acid, is placed in a bath of 3 parts acetic anhydride, and 12 parts benzene and allowed to remain at room temperature for about eighteen hours. When the reaction is complete, as determined by the solubility of the product in chloroform or acetone, the mass is centrifugally extracted, washed and dried. The important advantages claimed by this method is the complete control resulting from the moderation of the rate of esterification due to the low temperature of acetation, and the restraining action of the benzene, together with the ease of testing progress of the reaction and ability to stop same whenever desired.

Mork has also discovered (U.S.P. 972464, 1910; E.P. 20672, 1910) that methyl formate, a highly volatile liquid boiling at about 32°, which is the ester formed by the condensation of methyl alcohol and formic acid with the elimination of water, is also a very excellent solvent for cellulose acetate, and with it solutions of cellulose acetate can be made of a concentration comparable with those produced with chloroform; for example, cellulose acetate of a quality from which can be produced tough films can be easily dissolved in methyl formate in the proportion of at least 24 oz. of cellulose acetate to 1 gal. methyl formate. Methyl formate is a much more powerful solvent for cellulose acetate than acetone, and has distinct advantages over chloroform. It is not necessary for all purposes that methyl formate be used alone as a solvent for the cellulose acetate, for it may be desirable to modify the rate of evaporation of the solvent, which may be done by adding to the methyl formate a less volatile solvent such as acetylene tetrachloride or phenol. To solutions of cellulose acetate in methyl formate can be added limited quantities of liquids which are non-solvents of cellulose acetate; as, for example, benzol or carbon tetrachloride, such non-solvents modifying the rate of evaporation and also serving as diluents.

1. R. Sthamer's process (D.R.P. 123121, 1901) consists in heating a mixture of hydrocellulose, acetic acid and acetylchloride with sulphuric acid to 65–70°. Wohl (Charlottenburg) acetylates by means of a mixture of acetyl chloride in nitrobenzene with zinc chloride or pyridine or quinoline. See also F.P. 308506, 1901. The solution of the acetylcellulose in the reacting mixture is prevented by dilution with an inert liquid as ether and benzene, the acetylation proceeding more rapidly when the cotton is damped, as with sulphuric acid. The process is as follows: 10 k. dry, degreased cotton are heated with 50 k. acetic anhydride

Formation of Cellulose Acetates from Regenerated Cellulose. Advantage has been taken of the greater reactivity of cellulose obtained from the splitting off of carbon bisulphide from viscose, or from cellulose recovered from its cuproammoniacal solutions. Cellulose hydrate (mercerized cotton) has also been used as the source of the cellulose. C. Cross and E. Bevan [1] take cellulose obtained by precipitation from zinc chloride or ammoniacal copper solutions, and mix the cellulose hydrate thus obtained in the proportion of one to two equivalents of zinc acetate to one equivalent of cellulose. After thorough incorporation of ingredients the mixture is dried, and then dehydrated by heating to 110°. This intermediate product is finely ground and mixed slowly by stirring and cooling with a definite quantity of acetyl chloride, the temperature being kept below 30° during the entire addition of chloride. The quantity of the latter taken is calculated at two molecule equivalents of chloride to one of zinc acetate in the intermediate product. The agitation is continued until the reaction is completed, care being taken that the temperature does not rise above 50°. The product of reaction is treated with water to remove zinc salts, and after thorough washing is pressed and dried.[2] It is claimed that the manufacture of cellulose acetate by heating an equimolecular mixture of cellulose and magnesium acetate with two molecules of acetyl chloride, with or without further addition of acetic anhydride, cannot be carried out on a large scale, owing to the impossibility of controlling the reaction, which, although slow to begin with, invariably proceeds at an increasing rate, causing a rise of temperature fatal to the desired result. Moreover, the final product obtained, if not destroyed, or at least seriously affected by the heat of the reaction, is obtained in the shape of a cake of enormous toughness, the further working of which almost amounts to a practical impossibility. All these difficulties might be avoided if the reaction between the acetyl chloride and the cellulose would take place in the presence

containing 5% sulphuric acid, and 150 k. toluene, at a temperature of 70°, wrung out, washed and dried. See also F. Bayer & Co., D.R.P. 185837, 1902; Addition to D.R.P. 159524, 1905; Aust. P. 31391, 1906; Chem. Centr., 1905, 2, 527.

1. U.S.P. 530826, 1894; E.P. 18283, 22029, 1896.

2. In order to separate residues of unattached cellulose from the cellulose acetate, the dried product is treated with solvents, such as chloroform, which dissolve the cellulose acetate but not the cellulose itself.

The solution of cellulose acetate is filtered, or clarified by long standing, and the solution filtered or poured off from the insoluble matter may then be used.

The acetyl chloride used in the process may be diluted with chloroform or ethyl acetate (free from water and alcohol) in order to moderate the reaction and the resulting temperature. From its solution in chloroform it is obtained in transparent films or sheets according to the thickness of the layers evaporated. Hence it may be used as a substitute for collodion in many applications, such as surgical work, to supply a temporary and artificial skin or in closing down bandages; also as a varnish in special cases where collodion varnish is now used.

of a quantity of some solvent sufficient to dissolve the acetyl cellulose at the rate at which it is formed. C. Weber and C. Cross [1] have observed that in preparing an acetylizing mixture as above described, and allowing the reaction to start, certain solvents may be added in at first very small quantities, increasing, however, in volume as the reaction proceeds. Under these circumstances the addition of the solvent, although distinctly restraining the reactive energy of the acetylizing mixture, is no longer able to stop the reaction altogether, which in this manner is easily kept under control, and finally results in the formation of a thinly viscous solution of cellulose acetate. Of such solvents, they have found nitrobenzene, its homologues, epichlorhydrin, and dichlorhydrin particularly suitable.[2]

In the process of Basil Boesch [3] dry viscose [4] is treated with a mixture of acetyl chloride and acetic anhydride in varying proportions according to the degree of acetylation which it is desired to obtain and also to the amount of moisture still remaining in the viscose. The usual proportions for the preparation of cellulose acetate being 25 parts of dry viscose, 16 parts of acetyl chloride, 20 parts of

1. U.S.P. 627031, 1901; Nor.P. 7610, 1898; Port.P. 2899, 2930, 1899; D.R.P. 105347; Russ.P. dated Aug. 14, 1898; dated Oct. 14, 1898. Weber, Cross and J. Frankenburg, U.S.P. 632605, 1901; E.P. 18283, 22029, 1898; Can.P. 62188, 63101. 1899; D.R.P. 112817; Cross and Bevan, Belg.P. 113156, 1894; E.P. 9676, 1894; D.R.P. 85329, 1894; 86368, 1895; F.P. 243546, 1894; Cross, F.P. 282320, 1899; Cross and Weber, Dan.P. 2636, 2558, 1899; Weber and Cross, D.R.P. 112817; Russ.P. 3264, 3378, 1900.

2. In carrying out this invention 3 lb. of an equimolecular mixture of cellulose and magnesium acetate is employed—i.e., a mixture of 1.6 lb. of cellulose, preferably such as is obtained from the sulpho-carbonate of cellulose, with 1.4 of magnesium acetate. To this is added 1.8 lb. of acetyl chloride and 1 lb. of acetic anhydride. This mixture is now placed in a kneading machine provided with a heating or refrigerating jacket and the mass most intimately mixed. As soon as the reaction has gained an appreciable start 1 gal. of nitrobenzene, or equivalent—of its homologues, or epichlorhydrin or dichlorhydrin—is added, at first in very small quantities, adding a further quantity only after the previous addition is absolutely homogeneously incorporated into the acetylizing mixture, the addition as to quantity and time being regulated in such a manner that the last and largest portion of the solvent is added at about the time when the reacting mixture has reached its temperature maximum, which should not exceed 70°. The agitation of this mixture is then continued for three consecutive hours, when a thinly viscid solution of the acetate is obtained, containing only mere traces of lower acetates or unaltered cellulose. This solution now, while still in the hot state, is strained and then immediately run into 5 gal. of alcohol. The acetate separates out in the form of fine white flakes, which are separated from the mother-liquor by filtration, washed with warm alcohol, which washings are added to the mother-liquor, and then filter-pressed. The product thus obtained is without previous drying broken up and stirred in a very thin pulp with water, which is then heated until all traces of the organic solvent are driven off. The acetate is now again filtered, washed first with warm water slightly acidulated with hydrochloric acid in order to remove the last portions of magnesium salts, and the washings then carried to neutrality with clean warm water. The product is then pressed and dried at a temperature not exceeding 80°.

3. U.S.P. 708456, 708457, 1902; F.P. 308506, 1901.

4. Prepared according to U.S.P. 520770, 1894.

acetic anhydride, the latter being in excess in order to bind the moisture (water or alcohol) finally retained by the viscose and also for definitely saturating the viscose hydroxyls with acetyl radicals.[1]

Purification. With the exception of unchanged cellulose or hydrocellulose, all the components of the reacting mixture are soluble in water, with the possible exception of the diluents added to mollify the reaction and keep the temperature reduced. Hence the acetate may be purified by pouring into a large volume of water, similar to the purification of the nitrate. The mass is then pressed, washed with cold water with or without a trace of carbonate until entirely neutral, centrifuged and dried by artificial heat under 50°. The unacted-upon cellulose, if present in any considerable quantity, may be removed by dissolving out the acetate and filtering, selecting the solvents for the particular class of acetates produced. Phenol, or, more usually, chloroform and ethyl acetate, are the solvents used. For the removal of the difficultly soluble diluents, the mass is first pressed, washed with cold water, and the diluent removed by a separatory funnel after the combined liquids have been allowed to stand at rest for some hours, for the separation to become complete. The acetic anhydride may be extracted from the aqueous portion by shaking with a light-boiling petroleum distillate, and separating by fractionation. In the patented process of Lederer,[2] in which carbon tetrachloride is used as the separating agent, it is mixed with the acetylized cellulose until a paste is formed, which is pressed and dried.[3]

Pouring the product of reaction into water highly dilutes the comparatively expensive solvents, acetic acid, acetic anhydride and acetyl

1. As the reaction is a very energetic one, the container or acetylizing apparatus with the viscose in it is preferably thoroughly chilled before addition of the acetyl chloride and acetic anhydride. It is also well to previously chill these chemicals. After gradual addition of the cooled acetyl chloride and acetic anhydride the temperature rises very quickly to about 60–70°, and should be kept down as much as possible, at least in the first stage of the process. After addition of the whole quantity of the chemicals and thorough stirring of the mixture, a solvent is added in order to carry the reaction to the end. This solvent may be chloroform, nitrobenzene, nitrotoluene, glacial acetic acid, or others, or a mixture of them. For the preparation of lower acetates the temperature is lowered, less acetyl chloride is taken and acetone used as a solvent. After addition of the solvent, which should be used in a quantity sufficient to dissolve the theoretical amount of cellulose acetate formed—i.e., about ten times the weight of cellulose contained in the viscose originally taken—the container or apparatus is heated for several hours until substantially all the viscose has gone into solution, and during this heating the temperature should not exceed 100°. After conclusion of the reaction the solution of acetate in the particular solvents selected is poured into an equal bulk of ethyl alcohol, which precipitates the acetate. After separation of the precipitated acetate by filtration from the alcoholic mixture containing the solvent, the acetate is washed with fresh alcohol, or boiled with water, until the last traces of alcohol or solvent have been boiled off.

2. U.S.P. 902093, 1908.

3. See C. Weber, Gum. Ztg., October, 1899.

chloride, the subsequent recovery of which is often complicated by the presence of the restraining agents, as nitrobenzene or chloroform. The common method of purifying cellulose acetates by precipitating the ester by alcohol from its solution in nitrobenzene, chloroform, or acetone, in which solution the excess of reagents is usually carried, is expensive on account of the cost of alcohol, and is further complicated by the tendency of the alcohol to react with the esterizing agent, such as acetyl chloride, forming thereby esters as ethyl acetate. Similar difficulties are encountered in the formation of cellulose esters by methods involving the use of the anhydrides or chlorides of the acid radicals. B. Boesch [1] has found that the difficulties arising from the esterification of the precipitant or contamination of the product with the solvents—as, for example, in the use of nitrobenzene or chloroform—may be obviated by the use of a neutral hydrocarbon, as naphtha or other light petroleum oil, or benzol, as the agent for precipitating the esters and washing away the excess of reagents. He has found these neutral hydrocarbons active solvents for acetic anhydride, acetyl chloride, chloroform and nitrobenzene, singly or mixed together, as well as acetic acid in presence of the above reagents which are associated with the cellulose ester after its formation.

Cellulose Tetracetate. The preponderance of evidence at present is that a cellulose tetracetate does not exist, and although bodies have been obtained which upon saponification with alcoholic potash have given results indicating a tetracetate, such results are in error from the fact that a portion of the alkali is used up in neutralizing decomposition products of the cellulose molecule itself.[2] It has been described as entirely insoluble in carbon tetrachloride, methyl and ethyl alcohol, but soluble in ethyl benzoate, chloroform, and glacial acetic acid.

1. U.S.P. 708457, 1902.

2. For consecutive statement of this controversy see Chem. Soc. Ann. Rep., 1904, **1**, 69, 70; 1905, **2**, 89; 1906, **3**, 94; 1907, **4**, 89; 1908, **5**, 89. The existence of a tetracetate would not be in accord with the constitutional formula for cellulose proposed (Zeit. Farb. Text. Ind., 1904, **3**, 97, objected to by Cross and Bevan, Ibid., 1904, **3**, 197; answered by Green, Ibid., 1904, **3**, 309, rediscussed by Cross and Bevan, Ibid., 1904, **3**, 441). Cross and Bevan, C.R., **68**, 814; Ber., **12**, 2059; **14**, 1290; C.N., **65**, 77; J.C.S., 1890, 1; 1895, 435, 447. A. Green and A. Perkin have reinvestigated the supposed tetracetate and come to the conclusion that a triacetate is the highest acetyl derivative formed. For cellulose tetracetate and butyrate, see C. Weber, Z. ang. Chem., 1899, 5; Gum. Ztg. 1899, **14**, 49; J. Soc. Dyers, 1899, **15**, 124; C.N. 1899, **80**, 247; Valenta, Phot. Corr., 1901, **38**, 305. Berl and W. Smith (Ber. 1907, **40**, 903; abst. J.C.S., 1907, **1**, 289) in their work on acetonitrates could obtain in no case a derivative higher than a triacetate. See D. Law, Chem. Zeit., 1908, **32**, 365. The results of L. Vignon and F. Guerin, C.R., 1900, **131**, 585; Bull. Soc. chim. 1901, (3) **25**, 139, on acetylated cellulose and oxycellulose pointed to a tetra derivative.

According to a recent patent [1] an almost theoretical yield of tetracetate may be obtained by conducting the acetylation in the presence of methyl sulphate, the process being given as follows: 30 parts of cotton are treated in a bath with 70 parts acetic anhydride, 120 glacial acetic acid, and 3 of methyl sulphate until solution is nearly completed. The solution is then filtered, the filtrate precipitated by pouring into a large volume of water, and the acetate neutralized in the usual manner. It is stated that if a solution of this acetate in chloroform be poured upon a glass plate and allowed to remain until the solvent has evaporated, a film of great transparency and tenacity results.

Cellulose Formate, as Berl and Smith have shown [2] may be prepared (the monoformate) by the action of nearly absolute formic acid upon cellulose in the presence of acid, the proportions being 5 of sulphuric acid to 100 parts (by weight) of anhydrous formic acid. According to R. Woodbridge [3] when formic acid of sp.gr. of 1.20 is substituted for the anhydrous compound, no formate is produced, while, on the other hand, where the most concentrated acid is employed filter paper previously dried at 100° is as efficient as starting material as the hydrocellulose prepared according to the method of Girard. His method is to treat dried filter paper 9 parts with formic acid sp.gr. 1.22, 50 gm., and sulphuric acid 5 gm. for sixteen hours at 30–35°. After filtration by "thinning" with more formic acid, precipitating with water, neutralizing and drying, the product obtained

1. E.P. 9998, 1905; Belg. P. 137577, 138462, 1898; D.R.P. 85329, 86368, 1895; 105347, 1898; 120713; F.P. 280248, 1898, and First Addition thereto dated Oct. 19, 1898; Luxemb. P. 3302, 3361, 1898; Aust. P. dated, Jan. 1, 1899; Feb. 4, 1899; 8165, 1902; Hung. P. dated Aug. 31, 1898; Nov. 8, 1898; the Henckel-Donnersmarck process for cellulose tetracetate is as follows: 720 gm. pure cellulose (preferably prepared from the sulphocarbonate) is mixed with 630 gm. magnesium acetate in a kneading machine with 810 gm. acetyl chloride and 450 gm. glacial acetic acid of at least 99% strength. When the reaction commences 4.5 l. nitrobenzene is added in small portions, the addition being so arranged that about half is added by the time the mass has risen in temperature to 70°. The remaining half is then added in one portion stirred to prevent increase of temperature when the entire mixture is slowly agitated in a mixing machine for three hours. The result is a thin homogeneous solution of the tetracetate rendered opalescent by a small amount of lower acetates and unchanged cellulose. This solution, which has a temperature of about 50°, is poured slowly into 22.5 l. of 95% ethyl alcohol, and the white flocculent precipitate of tetracetate drained and pressed. It is then comminuted without previous drying, boiled with water until last traces of solvent have been dissipated, when dilute hydrochloric acid (equivalent to 2%) is added and heating continued to remove all traces of magnesium salts. The precipitate is then pressed, washed with water to a neutral reaction and dried at a temperature of not to exceed 55°. Of the homologues of nitrobenzene, Henckle-Donnersmarck has used with equal success *o*-nitrotoluene, *p*-nitrotoluene, *o*-nitroethylbenzene, and the nitroxylols and nitrocuminols from *iso*propylbenzene.

2. Ber., 1908, **40**, 907.

3. J.A.C.S., 1909, **31**, 1067. Bauman and Dresser (F.P. 396305, 1908) obtain fibroin from silk by treatment with absolute formic acid, which in turn may be used to produce a cellulose formate for use as an artificial filament.

was found to be soluble in formic acid, zinc chloride, insoluble in dilute acetic, sulphuric or hydrochloric acids. The ester was also insoluble in the following organic solvents: methyl, ethyl and amyl alcohols, ligroin, acetone, chloroform, acetylene tetrachloride, carbon tetrachloride, ethyl or amyl acetates, aniline and nitrobenzene. The insolubility of the formate in acetylene tetrachloride is a qualitative distinction and separation from the acetate. Saponification yielded 23.1% formic acid, the monoformate requiring 24.2%. According to the Vereinigte Glanzstoff Fab. A. G.,[1] a suitable raw material as a source of cellulose, is the "waste" which is produced in the manufacture of any of the artificial silks from cellulose. This waste is readily dissolved by gently warming with ordinary formic acid of 90–95% strength, and from solutions of suitable concentrations threads or films of formylcellulose may be obtained by the usual methods. A. Schloss[2] obtains an aceto-formate, by dissolving cellulose acetate in formic acid.

According to the patented process of J. Bemberg[3] the most suitable dehydrating agent for the preparation of cellulose formate is gaseous HCl, the process being to add 2–4 parts dry HCl gas to 100 parts formic acid of at least 98% strength, whereupon 20–30 parts cellulose are gradually added to the mixture. After a few hours the mass is in condition to be kneaded. Aided by repeated stirring, nearly all of the cellulose eventually passes into solution within twenty-four hours, the temperature being kept within 15–18°. The mass is precipitated in a large bulk of water, and washed as usual, when it becomes soluble in formic or acetic acids. It must be remembered in working with absolute formic acid that frightful burns may result from the mere spilling of the acid on the epidermis.

Advantage has been taken[4] of the fact that cellulose dissolves readily in concentrated formic acid in presence of sulphuric acid or zinc chloride, with the production of cellulose formates. According

1. E.P. 15700, 1910.
2. E.P. 6554, 1909. See F. Bayer & Co., E.P. 24980, 1910.
3. E.P. 2511, 1907; D.R.P. 189836, 189837, 1908; abst. Chem. Centr., 1908, **1**, 320; La Société Bemberg, F.P. 376262, 1907.
4. By Nitritfabrik Akt.-Ges., F.P. 405293, 1909; E.P. 17036, 1909; process patented in the U.S. by S. von Kapff as U.S.P. 953677, 955082, 1910; abst. J.S.C.I., 1910, **29**, 417. In their D.R.P. 219162, 219163, 1907, cellulose formate mixtures are obtained by dissolving cellulose in sulphuric acid of about 55° Bé., precipitating with H_2O., washing, and dissolving in formic acid after drying. The cellulose which has been dissolved in water and precipitated with water is thoroughly freed from sulphuric acid by washing with water. In this state the cellulose dissolves in formic acid with other additions, as sulphuric acid, or HCl to form mixtures of cellulose mono-, di- and tri-formate. From this solution the cellulose can be separated as usual as artificial silk, etc., and the solvent recovered without change or loss. In D.R.P. 219163, the cellulose is dissolved in mixtures of formic acid and zinc chloride.

to the invention the treatment with the mineral acid or zinc salt may be performed in a separate operation and the product subsequently dissolved in formic acid alone. For instance, cellulose is treated with sulphuric acid of 55° Bé. until it forms a thick, viscous paste. The paste is poured into water and the precipitated cellulose is recovered, washed free from acid, and dried; the product is then dissolved in concentrated formic acid with the production of cellulose formates. According to another method, 50 parts of zinc chloride are dissolved in 40 parts of dilute formic acid, and cellulose is treated with this reagent until dissolved. The product is precipitated, purified, dried and dissolved in concentrated formic acid as described. Solutions of cellulose formate may also be produced in a single operation by treating cellulose with a solution of 30 parts of zinc chloride in 100 parts of concentrated formic acid until the cellulose is dissolved. Cellulose mono-, di- and tri-formates are obtained (cellulose being C_6).

Cellulose Propionate may be prepared[1] by the action of propionic anhydride or propionyl chloride upon cellulose in the presence of an active dehydrating agent such as zinc chloride or sulphuric acid, the tripropionate being formed. It is completely soluble in chloroform and ethyl acetate. The other properties are stated as essentially the same as the normal acetate, the latter being (probably) insoluble in ethyl acetate, a qualitative distinction. On spontaneous evaporation of a chloroformic solution, the tripropionate films formed are not superior to those of the corresponding acetate, while the cost of production is much higher.[2] Cellulose butyrate and mixed esters of the monobasic fatty acids higher than acetic, according to Weber and Cross,[3] may be formed on a commercial scale. The method of procedure is to mix intimately 162 parts of cellulose, preferably obtained from viscose, with a concentrated aqueous solution of 198 parts magnesium butyrate, the mass being evaporated to dryness on the water bath with stirring. To this mixture 213 parts butyryl chloride and a small quantity (about 25 parts), butyric anhydride are added. After standing some time, the temperature rises and the mixture begins to thicken. Nitrobenzene is then gradually added in small portions at a time, in quantity sufficient in each instance to keep the temperature of the entire mass not higher than 70°, and to insure the fluidity desired. Upon completion of the reaction the mass is

1. R. Woodbridge, J.A.C.S., 1909, **31**, 1069; Berl and Smith, Ber., 1908, **40**, 1907; Bemberg, D.R.P. 189836, 1907. For descriptive review of the propionates, including the esters, see A. Dubosc, Rev. gén. chim., 1910, **12**, 333.

2. Knoll & Co., D.R.P. 206950, 1907, being Addition to D.R.P. 203178, have patented a process for its manufacture.

3. U.S.P. 632605, 1899; see Chem., Ztg., 1905, **29**, 667.

precipitated out with water, pressed and dried after neutralization.[1] The acetosulphates,[2] benzoates,[3] acetopropionates,[4] and other esters are claimed as products of commercial value, but as yet that value has to be demonstrated.

Starch Acetate.[5] According to Schützenberger[6] on digesting starch with acetic anhydride at 140°, an amorphous triacetyl derivative is formed. Watts Dict. Chem., **5**, 410, line 2, records that glacial acetic acid in a sealed tube with starch converts it into "soluble starch," but no authority for the statement is given. A. Michael,[7] in endeavor-

1. A mixed ester is obtained if the above mixture of 162 parts of cellulose with 198 parts of magnesium butyrate is treated with two molecules of some acid chloride other than butyryl chloride. Treatment with 157 parts of acetyl chloride and about 25 parts of either acetic or butyric anhydride yields a cellulose acetobutyrate. The reaction is otherwise conducted exactly as described above. In working with the higher fatty acids from heptylic or oenanthylic acid upward it is desirable to promote the esterification by heating the mixtures to temperatures not exceeding 90–100°.

The fatty acids that may be employed are the monobasic fatty acids from $C_2H_4O_2$, acetic acid up to $C_{10}H_{36}O_2$, stearic acid, and angelic, hexenoic, hypogaeic, and oleic acid, also aromatically-substituted acids, such as phenylacetic or phenylpropionic acid.

2. J.S.C.I., 1900, **19**, 1103; 1901, **20**, 741; E. Berl and W. Smith, Ber., 1908, **40**, 1903; abst. J.S.C.I., 1907, **26**, 273; 1908, **27**, 535; Cross, Bevan and Jenks, Ber., 1901, **34**, 2496.

3. J.S.C.I., 1903, **22**, 315, 563; 1902, **21**, 1550; 1904, **23**, 950, 1159; 1905, **24**, 454, 685, 748, 1251. Henckel-Donnersmarek has described the preparation of cellulose aceto-butyrate, aceto-propionate, phenylacetate and palmitate, which as yet have shown no commercial value.

4. According to C. Claessen (D.R.P. 222450, 1908), cellulose is converted into esters which are soluble in water, dilute alcohol, dilute acetone, and glycerol, but insoluble in pure alcohol or acetone, ether, and benzene, by treatment with anhydrides of fatty acids at temperatures of 70–80°, in presence of acid sulphate of pyridine or its homologues, or quinoline sulphate. If the esterification is carried out in presence of a suitable solvent, such as glacial acetic acid, the ester is obtained in the form of a clear, viscous solution, from which it may be precipitated by means of alkalis or ammonia. For example, 2–5 gm. of cellulose, 15 gm. of glacial acetic acid, 12 gm. of propionic anhydride, and 4 gm. of acid pyridine sulphate are heated at 70° for four days; the product is a clear, viscous mass. The aqueous solutions of this ester are liquid when warm, and gelatinize on cooling. Sulphates of aniline and bases other than pyridine also act as "contact substances," but do not give soluble esters.

5. The manufacture of starch formates has not, as yet, been very successful, due to the fact that the esters after formation were unstable and had a tendency to eliminate formic acid. Technically, formic acid, on account of its vigorous action, would presumably be of considerable value, but the acid cannot be directly sprayed on the starch, which it swells greatly. Although its aqueous solutions have been carefully experimented with in attempts to formylate starch, satisfactory conversions have not been obtained; 40% formic acid swells starch in the cold while 10% solutions swell starch at 40°. With less quantities of acid, hydrolysis rather than esterification results. However, it was found that a mixture of ordinary methylated spirits and 90% formic acid does not swell starch at ordinary temperature, but the time of conversion has to be carefully gauged in order to avoid the formation of water-soluble products. For process of manufacture see U.S.P. 778173, 1904. For carbohydrate esters of the higher fatty acids especially mannitol stearate, see W. Bloor, J. Biol. Chem., 1910, **7**, 427.

6. Schützenberger and Naudin, Bull. Soc. Chim., 1869, (2), **12**, 110. Ann. Chim. Phys., 1870, (4), **21**, 235.

7. Am. Chem. Jour., 1883–1884, **5**, 359.

ing to differentiate chemically between potato and cornstarch acetylated these with acetic anhydride and with acetyl chloride and studied the properties of the esters formed. In 1901 F. Prengl [1] published his work on the acetylation of starch, Z. Skraup and H. Hamburger [2] having shown two years previously that starch on moderate acetylation gives an acetyl compound which when hydrolyzed with acids yields a product having all the characteristics of soluble starch.[3] Cross, Bevan and J. Traquair,[4] in 1905, and the latter three years later,[5] described experiments on superficial acetylation of starch, leading up to certain patented methods [6] for the formation of starch-cellulose acetate, a product known commercially as "Feculose," and for which a wide field apparently has been opened up.

The product is not formed by the aqueous hydrolysis of starch; in fact, it is best practiced in the absence of water, on account of the latter swelling the starch granules, and differs from soluble starch both in chemical properties and in the fact that it dissolves completely in boiling water to a clear solution, which does not gelatinize or separate out for some time; resists the action of ferments, and when dried yields a colorless, continuous film. In preparing this material some form of starch—preferably farina or potato starch—is dried at 80–100° in fine powder, and fed into a vessel such as a rotary steam-jacketed converter, glacial acetic acid being added in the proportion of

1. Monatshf., 1901, **22**, 1049. He treated soluble starch prepared by Zulkowsky's method with 10 times its weight of acetic anhydride containing 1% of sulphuric acid, at ordinary temperature for forty-eight hours, a triacetate on a C_6 formula being obtained. The product was insoluble in water and alcohol, gave no coloration with iodine, and no reduction with Fehling's solution. Prengl found that with ordinary starch and acetic acid containing 1% sulphuric acid, acetylation takes place very slowly at ordinary temperatures, but if heated to 90° on the water bath, the starch quickly swells and soon goes partly into solution, while if an equal volume of glacial acetic acid is added, entire solution occurs in a few minutes. A voluminous granular precipitate is formed by pouring the mass into a large volume of cold water, the yield being but 60%, showing considerable hydrolysis to have taken place. For action on starch of acetic acid saturated with HCl gas see Z. Skraup and F. Mentor, Monatshf., 1905, **26**, 1415; Skraup, Ber., 1899, **32**, 2413; also the "dichloracetic esters," Klidiaschwili, J. Russ, Phys. Chem. Soc., through Brewers' Jour., 1905, **41**, 688. D. J. Law (Chem. Zeit., 1908, **32**, 365) finds a new acetylating agent consisting of 100 gm. glacial acetic acid 50 gm. zinc chloride and 100 gm. acetic anhydride, by means of which three acetyl groups (cellulose C_6) may be introduced into cellulose, but does not react with starch.

2. Ber., 1899, **32**, 2413.

3. On energetic acetylation, however, breaking down occurs, attended by addition of acetic anhydride, and besides amorphous products, pentacetylglucose (m. pt. 113°) is obtained, but only when the product is treated with water.

4. Chem. Zeit., 1905, **29**, 527.

5. J.S.C.I., 1908, **27**, 288; very full paper. For "New Acetyl-cellulose Thickening Agent," see Text. Col., 1904, **26**, 375.

6. C. Cross and J. Traquair, E.P. 9868, 1902; U.S.P. 778173, 1904; W. Wotherspoon, F.P. 334154, 1904; C. Cross, D.R.P. 166826, 1905; abst J.S.C.I., 1903, **22**, 1008; 1904, **23**, 29; 1905, **24**, 98.

one-third to one-half the weight of the dried starch.[1] The vessel is closed and slowly revolved until acid and starch become well mixed, when steam is turned into the jacket and heat continued for one to two hours, and until the desired acetylation has been produced. The converter is kept continually revolving during the heating period, during which operation or after its completion, the vessel is connected with a condenser to recover the excess of acetic acid.[2] [3]

Thus prepared the starch acetate differs but little in appearance from unacted-upon starch, does not reduce Fehling's solution, gives the usual blue color with iodine, and, like soluble starch, is precipitated by alcohol or strong saline solutions, and also readily reacts with diastase under normal conditions. The acetylated starch is chemically more reactive than ordinary starch, the washed product upon saponification showing that but 1–4% acetic acid (calculating on a C_6 molecule) has been fixed.[4]

The uses for this product, as pointed out by Traquair,[5] are as a

1. A smaller proportion—20–30%—of acid calculated on the weight of the starch may be used, if sprayed by a suitable atomizer upon the starch in a cylindrical mixer, and the latter then charged into the converter. See A. Chanarde, D.R.P. 221080, 1908.

2. Instead of employing acetic acid directly, the acid may be evolved as vapor in a separate container by treatment of an acetate with a non-volatile acid and conducting the acetic vapor into the mixer containing the starch, until the latter has absorbed about 20% of its weight of acid. The mixture is then fed into the converter and heated as described above. The development of the process has mainly been along the lines of limiting the quantity of acid and perfecting its recovery, but it has been established that 10% of glacial acetic acid on the dry starch was the minimum which would produce useful products. Although acetylation may be considerably accelerated by the presence of small amounts of mineral acids along with the acetic acid, care has to be exercised in the control of the conversion, that the yield is not diminished by the formation of water-soluble products. The acetylated starch as it leaves the converter contains 4–5% absolute acetic acid uncombined, which is best eliminated by washing with small portions of cold water. It is therefore obvious that the conversion must be limited to the formation of products which are water-insoluble, because if the reversion is carried too far, not only does the loss become serious, but the acetylated starch granules appear to hydrate in cold water to a colloid, glutinous mass. Under proper conditions, however, acetylated starch can be washed and dried like ordinary starch.

3. If dilute acetic acid is used, water cannot be used as the diluting medium, which on heating has a swelling effect on the starch granules. Alcohol and other volatile liquids have no swelling effects on starch at the temperature of treatment. With the use of alcohol a closed vessel is required, that the fluid may be subsequently recovered by distillation. When acid diluted with water is used the presence of certain concentrated saline solutions, as strong brine, minimizes the swelling of the starch.

4. The effect of this comparatively small amount of acid is out of proportion to the starch aggregate which takes part in the reaction. It appears that constitutional changes result in the starch simultaneously with the fixation of acetyl groups.

5. F. Farrell (Jour. Soc. Dyers and Col., 1908, 24, 294) in describing various textile-stiffening agents, points out the uses of Feculose in dyeing and French cleaning. Traquair (l.c.) claims that its properties as a true colloid enables it to confer luster, and also to penetrate and give substance and "handle" to textiles in the form of yarn or cloth. The clear filming property is especially noticeable in bright

substitute for gelatin and certain vegetable gums, as a textile finish, and in the confectionery trade.[1] As a size in place of "chromo" glue or casein for paper manufacture,[2] it is said to give excellent results.

A. Militz [3] has assigned to F. Bayer & Co., a process for preparing acetylated soluble starch, in which 500 parts of potato-flour are quickly introduced with continuous stirring into a mixture of 250 parts of 98–99% acetic acid with $7\frac{1}{2}$ parts of nitric acid (40° Bé.). The product of the reaction, at first a rather thin liquid, solidifies after a short time to an easily triturable solid. The mixture is allowed to stand for about twenty-four hours, then cold water is added and the new product filtered off, washed with cold water and dried at about 40°. It looks like starch. It is a white amorphous powder, insoluble in cold water, but soluble in water of about 70°. In such a solution containing about 10–15% it furnishes a glue-like, strongly adhesive solution, which can be kept for weeks, without losing its adhesive properties. This solution does neither congeal nor coagulate. A solution of about 5% of the acetylated starch gives with iodine a violet color. After heating on the water-bath a solution of about 10% of this acetylated starch with caustic alkali, for example with 0.5 gm. Na_2O to 10 gm. acetylated starch, starch cannot be recovered from this solution, nor can the formation of starch be observed during any stage of the reaction. After saponification with caustic alkali and distillation under the addition of phosphoric acid, acetic acid is obtained in the distillate.

Cellulose Acetate Plastics. The ever-increasing uses to which the pyroxylin plastics typified by celluloid are being put has resulted in much experimenting in attempts to produce cellulose acetate plastics, and thus combine the two most desirable essentials—incombustibility with plasticity, and ability to produce moldable forms. The first steps taken in this field were attempts to modify and lower the inflammability of the pyroxylin plastics by the introduction of varying amounts of cellulose acetate. The method of E. Zühl [4] is to combine cellulose nitrate 70, and cellulose acetate or butyrate 30,

colors as red or yellow, the intensity of which it appears to increase. Used in conjunction with ordinary starch, it is said to impart flexibility and clearness to the finish, leaving the proportion of starch to be varied according to the stiffness required. It gives exeellent results with linen dresses, imparts the required springy feel to lace, and does not dull the luster of mercerized cotton.

1. Especially in making jujubes, gumdrops, nougat and similar "sweets," as it can be cooked with sugar and glucose to any "steam" temperature.

2. It is said that the surface produced has excellent printing qualities, owing to its unique ink affinity.

3. U.S.P. 941159, 1909.

4. U.S.P. 729990, 1903; Zühl and Eisemann, D.R.P. 162239.

with camphor 50 parts, which are mixed together mechanically, forming a plastic of low inflammability. Lederer makes use of chloral as the intermediate solvent for both acetate and nitrate, forming a compound of nitrocellulose 5, with chloral hydrate 2, together with acetylcellulose 3, and chloral alcoholate 2.[1] The mass is incorporated into a plastic form by means of heat and pressure, but it must be evident that at the present cost of chloral hydrate and alcoholate, the compound must, of necessity, have a very limited use. In still another method the inflammability of celluloid is reduced, while the plasticity is said to be not materially decreased by incorporating with celluloid, compounds obtained by the action of organo-magnesium compounds[2] on hydro-aromatic, unsaturated ketones (e.g., carvone, pulegone, cyclohexanone) worked up with acetyl-cellulose. For example, a satisfactory formula is said to consist of 100 parts cellulose acetate heated for some hours with a solution of 55 parts of benzyldihydrocarvone in acetone and chloroform, celluloid then being added, and the solvent removed by evaporation under reduced pressure. A less expensive compound results when a solution of 40–50 k. camphor in 50–60 l. methyl or ethyl alcohol, is added to 100 k. nitrocellulose, and another mixture of 100 k. acetylcellulose in 40–50 k. acetone are mixed. The partial precipitation which results is not interfered with, but the mass evaporated to solidity and the solvent recovered, the formation of the plastic being completed by means of heat and pressure.[3] By using the nitric acid ester of cellulose or hydrocellulose as the starting point[4] and treating this with acetyl chloride and acetic anhydride in the presence of sulphide, mixed acetonitrates of cellulose result which can be made plastic by incorporation with camphor, and at the same time are not highly inflammable. The dif-

1. F. Lederer, F.P. 377010, 1907.

2. Process of B. Szelinski, D.R.P. 202720, 1907. In the process of H. Manissadjian (F.P. 397429, 1908) cellulose acetate is converted into a plastic mass by means of a solvent, and the mass is incorporated with softening agents which, according to their proportions, modify the softening temperature of the product to any desired degree, according to whether it is intended to serve as a mold or a matrix. Mineral filling agents may also be added. The plastic mass is composed of 40 parts of cellulose acetate and 80–100 parts of a volatile solvent, such as ethyl acetate, chloroform, acetone or alcohol. The softening agents consist of 5–20% of castor oil, calculated on the weight of the solution, about an equal proportion of a sulphophenic derivative of a halogen and 10–15 parts of glycerol acetate.

3. J. Schmerber and L. Moraine, F.P., 324121, 1902; E.P. 4863, 1903.

4. L. Lederer, D.R.P. 179947, 1905; in the process of F. Bume (D.R.P. 210519, 1907) acetylcellulose is mixed with camphor or a camphor substitute, then with a solvent (chloroform, acetone, ethyl acetate) and next with a precipitant (water, benzene, alcohol, etc.) miscible with the solvent; or the solvent and precipitant may be added together. The semi-solid plastic mass thus obtained can be molded in the cold or it may be rolled on to a suitable support. It is not adhesive, and rapidly hardens.

ficulty with this method consists in being able to produce the same mixed ester at will, so that the resulting acetonitrate will give the same results technically, when, for instance, the product is used in the manufacture of difficultly inflammable, continuous photographic films.[1] The combinations of cellulose nitrates and acetates, so far as the author is aware, do not enter materially into the arts to-day, having been recently superseded by plastic acetates, as will be described presently.[2] The so-called cellulose triacetate, when compounded with camphor under heat and pressure, yielded—instead of the plastic mass desired—masses which are brittle, especially upon complete expulsion of the solvent, even when the sheets are excessively thin films. The complete bar to the use of a cellulose acetate-camphor mixture has been until recently due to the fact that none of the acetates are plastic and moldable under heat, not even in the presence of an equal weight of camphor.

In another process[3] plasticity is induced by combining cellulose acetate with esters of phenols, cresols or naphthols, especially[4] the phosphoric, thiophosphoric, or sulphonic esters, the product being worked up in the same manner as celluloid, a solvent being added to assist the incorporation of the materials if necessary. Difficulty, however, was found in obtaining sufficiently concentrated cellulose acetate solutions, but by substituting for the acetate, mixed esters in which one acid radical is acetic acid, acetone solutions up to 75% strength may be produced.[5] These esters are then combined with

1. See "Treatment of Acetyl and Nitro Cellulose for the Manufacture of Plastics," F. Meyer, E.P. 19735, 1908; F.P. 393963, 1908, in which cellulose acetates, is converted into the plastic condition by the simultaneous presence of both a solvent and a coagulating substance, in such proportions that the cellulose derivative is neither truly dissolved nor fully coagulated. These plastic compositions are not sticky and can be worked in a highly concentrated condition by the usual spreading machines. If, for instance, cellulose acetates be employed, the plastic mass is made by means of a mixture of acetone and water. Such a mass can be applied to cloth or paper and at the same time a pattern may be impressed on it with an engraved roller.

2. According to the process of the Commercial Products Company (F.P. 402028, 1909) a solution of gelatin (with or without casein or albumin) in phenol or anhydrous glycerol, or a mixture of the two, or in other anhydrous solvents, is made into an emulsion with a suitable proportion of gum-lac or similar substance, or acetylcellulose, and camphor dissolved in aniline. The mixture is shaken with a preparation of anhydrous formaldehyde, such as, e.g., paraformaldehyde or a solution of formaldehyde in anhydrous glycerol, until the mass becomes thick and homogeneous, after which it is poured into molds and pressed if desired. Special claim is made for the use in the gelatin emulsion of a new form of celluloid in which the camphor may be replaced by anhydroformaldehydeaniline or by a resinate.

3. F.P. 413657, 413658, 1910; abst. J.S.C.I. 1910, **29**, 1101.

4. A suitable mixture is said to consist of 100 k. cellulose acetate, 35 k. phenyl phosphate and a sufficient quantity of solvent as glacial acetic acid, acetone or chloroform.

5. W. Merckens and H. Manissadjian, F.P. 414679, 414680, 1910.

phenols, as previously described. C. Mijnessen [1] prepares plastic films by successively depositing layers of acetylcellulose one upon another, or with alternate layers of gelatin, or other supple ductile material, as acetylcellulose made plastic by phenol. W. Lindsay [2] imparts strength and permanence to cellulose acetate by adding 2% urea. Compositions resembling celluloid, etc., are prepared by mixing acetylcellulose, triphenyl phosphate and a solvent such as acetone so as to form a solution or plastic mass, suitable proportions being 10–20 parts of triphenyl phosphate to 100 parts of acetylcellulose.

W. Walker [3] found that when cellulose acetate is associated with a solvent of low volatility, such as thymol, phenol, cresol or certain essential oils containing phenolic compounds, a certain degree of plasticity is imparted to the combination. The preferable solvent should be like thymol, which melts at a temperature at which the cellulose acetate is unaffected, the action of the solvent being promoted by the conjoint use of a volatile solvent like chloroform, which at the same time is uninflammable. The solvent, however, in time volatilizes and the cellulose derivative reverts to its original brittle condition. This was found true also of the cellulose acetates in combination with thymol, although in a lesser degree. A cellulose acetate may also be modified by the addition or presence of a solvent in which the tendency to volatilize is so small as to be negligible, and yet such solvent may be of no practical value on account of its tendency to crystallize and thus separate from the other components of the material, or to exhibit an undesirable characteristic, as deliquescence, efflorescence, or darkening on exposure to light, heat or air. Dr. Walker has discovered [4] that if to the combination of cellulose acetate and bodies like thymol as mentioned above, non-volatile non-solvents, of cellulose acetate such as castor oil be added, the solvent of low volatility becomes substantially fixed, and is not driven off even upon the application of prolonged but moderate heating, while on the other hand a solvent which in itself is not volatile, but which is precluded on account of undue tendency to crystallize—as for example, acetanilid —is evenly retained in its amorphous condition in the resultant material. Also that when thymol or other substance having similar effect is combined with cellulose acetate, a larger amount of non-solvent, as castor oil, may be introduced without subsequent segregation or

1. F.P. 411298, 1910; E.P. 476, 1910; abst. J.S.C.I., 1910, 29, 978.
2. F.P. 415517, 415518, 1910.
3. U.S.P. 774713, 774714, 1904; cellulose acetate 10, chloroform 80, thymol 5, and castor oil 3 parts being specified. The advantage of thymol lies in the fact that it melts at a temperature much below that at which the acetate is affected.
4. U.S.P. 774714, 1904.

precipitation. Such a compound, it is claimed, may be produced as follows: 10 parts of cellulose acetate are added to 80 parts of chloroform and 5 parts of thymol. When solution is complete, 3 parts of castor oil dissolved in 20 parts of chloroform are added. The chloroform is then completely driven off, the castor oil, which without the thymol would precipitate out, is held in complete solution and thus fixes or retains the thymol originally added.

L. Lederer has developed a plastic cellulose acetate, containing no camphor, and in which the plasticity depends upon acetylene tetrachloride[1] still remaining in the finished article. It is understood large quantities of this acetylene tetrachloride containing cellulose acetate is being produced in Rochester, N. Y., for uninflammable photographic films at the present time. Such a film examined by the author and said to have been produced at this city was found to contain 12% acetylene tetrachloride. Lederer first[2] found that when cellulose acetate is caused to react with certain groups containing hydroxyl, ketone and amide radicals, an interlocking of the molecules appears to take place, so that the resulting compounds are plastic. In a soft state impressions of etched or engraved plates may be taken on the material, the delicate and fine points of the etching being faithfully reproduced. The invention is described as being carried out in one of the following ways:

(*a*) 1 part of cellulose acetate and 1½ parts of phenol[3] are fused at about 40–50°. As soon as a clear solution has formed the mass is placed on warm glass or metal plates and allowed to cool gradually. After standing for several days the mass, which is somewhat like

1. Although acetylene chloride is such an excellent cellulose acetate solvent, the closely related bodies trichlorethylene and dichlorethylene are non-solvents. However, F. Bayer & Co., (E.P. 16932, 1910) has shown that dichlorethylene in admixtures with alcohols is capable of dissolving cellulose acetates. Those esters which are readily soluble in acetone are dissolved by the mixture at ordinary temperatures, while those esters soluble in chloroform, and sparingly soluble in acetone require heating for solution. Suitable proportions are stated as 650–730 parts dichlorethylene to 150 parts of alcohol. In E.P. 14364, 1910, F. Bayer describes the usefulness of pentachlorethylene as a cellulose acetate liquifying agent, with addition of other dissolving or diluting fluids. While pentachlorethylene alone has only a very slight solvent action on cellulose esters, in presence of alcohol or other solvent it plays the part towards organic cellulose esters that camphor does towards nitrocellulose in celluloid, or acetylene tetrachloride towards acetylcellulose. For example, 200 parts of cellulose acetate are mixed with 100 parts of pentachlorethylene and 700 parts of acetone; when the solution is filtered and poured on plates, flexible films are obtained.

2. U.S.P. 774677, 1904; in a more recent patent (E.P. 8945, 1909) it is stated that durable softness and suppleness may be produced in cellulose acetate by the addition of a "small proportion of an organic acid ester of a monohydric phenol or of a phenol either of a homologue or nuclear substitution product of these substances."

3. D.R.P. 145106, 151918, 1902; phenol, resorcin, pyrogallol, naphthol, aminophenol, saligenin, nitrophenol, salicylic acid ester, all being efficient.

caoutchouc at first, hardens into pliable sheets which can be worked or employed like celluloid.

(*b*) Another method of operation is to mix cellulose acetate intimately with one-half its weight of phenol and then subject it to great pressure. The pressed mass is then allowed to completely harden in the air.

(*c*) Again, an intimate mixture of equal parts of acetyl-cellulose and chloral hydrate [1] or aniline may be subjected to pressure at a temperature of 50–60°, the pressed mass being allowed to harden in the air.

A similar method may be followed—a ketone, for instance, acetophenone—or an amide as, for example, acetamide, being employed.

The drawback with these combinations, it has been claimed, is that upon exposure to the air for a short time they materially harden and can with but great difficulty again be made plastic. The following year (1905) brought forth from Lederer a clear description of the application of acetylene tetrachloride as a combined cellulose acetate direct solvent and plastic-forming liquid [2] in which is described methods of procedure to overcome their well-known defects. The method is to bring together 1 part of cellulose acetate with 9 parts acetylene tetrachloride, stirring the mixture thoroughly until the ester has become completely dissolved. Heat may be used to facilitate solution, as the chloride boils at 147° and is uninflammable. For the preparation of continuous photographic films, one method of procedure would be to prepare a solution of cellulose acetate in acetylene tetrachloride as viscous as can be worked conveniently. After solution is complete, which may be facilitated by a gentle heat in a jacketed kettle, some of the solvent may be recovered by vacuum distillation, and the viscid solution after cooling worked into continuous sheets as described in Chapter XVII under "Film Manufacture." If it is desired to produce sheets not continuous, the vacuum distillation of solvent may be carried to a point where the mass is nearly solid, which after cooling is worked under masticating rolls, pressed into blocks, seasoned and sheets planed from this matrix, as described in Chapter XIV.

1. D.R.P. 152111, 1902. In F.P. 330714, 1903, Lederer, cellulose acetates are shaped into threads, ribbons, films, tubes, etc., by discharging thick solutions of them through suitably shaped orifices into liquids which dissolve out the solvent without dissolving the cellulose compounds. For instance, a solution of cellulose acetate in acetic acid or phenol is discharged into alcohol and the precipitated product subsequently dried.

2. U.S.P. 804960, 1905; F.P. 352896, 352897, 1905; D.R.P. 175379, 1904; E.P. 6751, 1905; abst. J.S.C.I., 1905, 24, 978. A process of lacquer manufacture is described where resins and cellulose acetate are combined by means of their mutual solvent, acetylene tetrachloride (tetrachlorethane). See also E.P. 26075, 1901.

A. Lumière & Sons [1] have described non-inflammable photographic films which are prepared by applying to a polished surface a thin layer of cellulose acetate or other non-inflammable cellulose ester, then a layer of gelatin, and finally a photographic emulsion. The cellulose acetate layer need not be more than one-fifth to one-half the thickness of the entire film. The gelatin may have been treated with formaldehyde, alum, etc. Films prepared in this manner are said to be unaffected in dimensions by the subsequent treatment. F. Bayer sought to obtain plasticity by the use of cellulose acetate with naphthalene, paratoluidinesulphamide, or a methyl ester of oxalic, phthalic or paratoluidine sulphonic acids, and it is stated that photographic films of considerable elasticity result from their use.[2]

Cellit [3] (cellite, cellith, zellith, zellit) is the trade name given to a cellulose acetate-camphor plastic, which stands in the same relation to the cellulose acetates as does celluloid to the cellulose nitrates.[4] This product of the Farbenfabriken vorm. F. Bayer & Co. and their chemists, A. Eichengrün and T. Becker, was first announced in 1901, as the result of English Patent 26075 [5]. The method stated is to form a mixture of 100 parts of acetylized cellulose prepared by the action of acetic anhydride and sulphuric acid on cellulose at ordinary temperature, and 50 parts of camphor, the mass being triturated with chloroform or glacial acetic acid. After standing for some hours and gently heating [6] the solid parts will dissolve to a transparent liquid. On evaporating the liquid off in any appropriate manner, the "new celluloid-like substance" remains in the shape of a translucid, uncolored, flexible mass, burning slowly, and which can easily be worked by rollers while still hot. Instead of camphor, other bodies may be employed "which by their action impart plasticity [7]

1. F.P. 401228, 1908.

2. For review of recent investigations on cellulose acetates and their technical application, see F. Beltzer, Rev. gén, chim., 1908, **9**, 421; Mon. Sci., 1908, **68**, 657; Rev. chim., 1906, **9**, 421. For method of preserving solutions of acidylized cellulose see L. Lederer, E.P. 26502, 1906.

3. E.P. 21628, 26075, 1901; 25821, 1902; Bayer & Co. For general articles on Cellit, see Eichengrün, Fabriks-Feuerwehr. 1908, **15**, 61; Seifenfabr. 1908, **28**, 946; Chem. Zeit., 1908, **32**, 583; Z. ang. Chem., 1908, **21**, 1729; Phot. Wchbl., 1908, **34**, 269; Arch. Buchgew., 1908, **45**, 386; Arch. Feuer. 1908, **25**, 124; Prom., 1908, **19**, 702; Z. Drechsler, 1908, **31**, 375; Am. Apoth., 1908, **29**, 40.

4. See F. Beltzer, Mon. Sci., 1908, **22**, 648; E.P. 26075, 1901, abst. J.S.C.I., 1902, **21**, 1469; F.P. 317008, 1901; 371447, 1907, abst. J.S.C.I., 1902, **21**, 873; 1903, **22**, 1015; 1907, **26**, 340.

5. A. Eichengrün and T. Becker, U.S.P. (738533, 1903), in which "plastic" cellulose acetate compounds is first mentioned in U.S. patent literature. See Eichengrün and J. Precht, U.S.P. 742405, 1903.

6. Bayer & Co., F.P. 317007, 317008, 1901; 350442, 1904; E.P. 7346, 1903; Aust. P. A-6502, 1901; abst. J.S.C.I., 1902, **21**, 870, 1293; 1903, **22**, 1015.

7. Eichengrün and Becker, U.S.P. 734123, 1903; E.P. 28733, 1904, the process differing from that of Lederer (U.S.P. 654988, 1900) in that a larger quantity of

to the mixture in the preparation of celluloid, such as paratoluene sulphanide, methyl ester of paratoluenesulphamic acid, naphthalene, etc." When formed into sheets, the films are distinguished by their great stability, and can be kept for a long time without altering.[1]

The next important advancement made by these chemists was in preparing a cellulose acetate which differs from the ester of the older art by its stability against cold alkaline carbonates and ammonia, and by the property of being difficultly attacked by caustic alkalis. In carrying out the process of manufacturing this product, 200 parts of cellulose[2] are introduced into a mixture of 800 parts of acetic anhydride and 20 parts of concentrated sulphuric acid, and the mixture thus obtained diluted with an equal volume of glacial acetic acid. The reaction mass is allowed to stand for twelve to twenty-four hours, the temperature rising the while to 40–45°. It is advisable to keep the temperature at a lower degree by cooling. The clear, nearly colorless thick liquid thus obtained is then poured into water, the acetyl cellulose separating out. Thus prepared it is a whitish voluminous mass. In a dry state it is readily soluble in chloroform, epichlorhydrin, nitrobenzene, and glacial acetic acid, soluble in acetone and pyridine and insoluble in alcohol, ether, acetic ether, amyl acetate, and glycerol. It is not attacked by cold alkaline carbonates, ammonia, or dilute acids, and with but great difficulty by caustic alkalis. On evaporating the solutions a colorless and translucid film remains, which is, even in a thickness of half a millimeter, very flexible. The concentrated solutions, especially that in glacial acetic acid, have the characteristic property that on being poured into a liquid which does not dissolve the acetylized cellulose—such as water, alcohol, or formic aldehyde—they deposit peculiar cylindric precipitates, including a large quantity of the liquid. On drying the said precipitates shrink

sulphuric acid is employed, and in contradistinction to the acetylcellulose obtained by Lederer, the patentees' ester is soluble in alcohol. The process is carried out as follows, all parts being by weight: 125 parts of hydrocellulose are introduced into a mixture prepared from 500 parts of glacial acetic acid, 500 parts of acetic anhydride and 25 parts of sulphuric acid of 66° Bé. The reaction mixture is allowed to stand at the ordinary temperature on stirring it from time to time. After some hours the hydrocellulose is dissolved, and the reaction mass forms a thin liquid solution which can easily be filtered. Subsequently it is poured into water, by which means the product is precipitated in the shape of white flakes, which are filtered off and dissolved in five times its quantity of alcohol. On cooling the resulting solution grows stiff to a mass like gelatin.

The acetylized cellulose is a white mass readily soluble in alcohol. Its concentrated alcoholic solution represents in the cold a solid mass like gelatin, which liquefies on heating or on adding alcohol. From the solutions in alcohol, acetone, or glacial acetic acid, the ester is precipitated in the shape of white flakes by the addition of water.

1. D.R.P. 153350, 159524, 1902; 185837, 1905; Aust. P. 21213, 1904; 32637, 1907; F. Bayer & Co., abst. Chem. Centr., 1905, 2. 527.

2. Eichengrün and Becker, U.S.P. 790565, 1905; F.P. 371447, 1906.

to hard oblong bodies. The new acetyl cellulose is decomposed on heating it to about 250°. Analysis shows that the new product is a triacetyl derivative.

The glacial acetic acid and especially chloroform used as solvents were soon found to be unduly expensive as compared with the fluids used technically in the similarly useful nitrocellulose preparations, but Eichengrün and Becker discovered [1] that in preparing the acetate according to the method described in U.S.P. 790565, 1905, the reaction really takes place in two phases. At first an acetate is produced which is soluble in alcohol, this product being then transformed by the further action of acetic anhydride and sulphuric acid into the triacetyl cellulose insoluble in alcohol. They next succeeded in carrying out the action of acetic anhydride and sulphuric acid on cellulose in such a way that the acetate, soluble in alcohol, is prepared as chief product. For this purpose the process is stopped when the body soluble in alcohol as first produced, begins to be transformed into the triacetyl cellulose insoluble in alcohol.

In carrying out this process practically the following formula may be used, the parts being by weight: A mixture of 80 parts of acetic anhydride, 80 parts of glacial acetic acid, 4 parts of concentrated sulphuric acid, and 20 parts of cellulose (e. g., cotton yarn) is allowed to stand at from 20–25°, with stirring from time to time. After about ten hours the whole mass is transformed into a thick syrup. When the precipitate obtained by diluting a test portion with water contains only a small quantity of unchanged particles of cellulose and is still soluble in hot alcohol, the production of the cellulose acetate is completed. The reaction mass is then mixed with a large quantity of water by stirring, and the precipitate obtained filtered off and pressed. The ester thus obtained is solid and can take various forms, according to the way in which it is prepared. In a wet state it is a whitish voluminous mass. When dry, it represents yellowish hard lumps. It can also be obtained in transparent sheets and films by evaporation of its solutions. It is soluble in 70% hot alcohol, the alcoholic solution solidifying to a gelatinous mass on cooling. By the addition of much water to the alcoholic solution the ester is precipitated in fine light flakes.

By treating this form of acetylhydrocellulose with camphor and a mixture of alcohol and ethyl acetate (the most efficient of the inexpensive solvent combinations for this ester) as described above a plastic product may be formed, and the material possesses the three val-

1. Eichengrün and Becker, U.S.P. 809935, 1906; D.R.P. 169364, 1906; Aust. P. 32636, 1907.

uable requisites of uninflammability, plasticity, and dissolution in comparatively inexpensive solvent mixtures.[1] While this body can never

1. In the U. S. Daily Consular and Trade Rep., No. 3244, Aug. 4, 1908, p. 12 and No. 3315, Oct. 27, 1908, p. 12, reprinted Jour. Roy. Soc. Arts, 1908, **56**, 1009; 1908, **57**, 78; Photographic Dealer (Lond.), 1909, Jan., p. 24, is given the following data supplied by the inventors of Cellit and communicated to the U. S. Consul at Chemnitz:

"It is easily soluble in such solvents as alcohol or acetic ether, which do not seriously affect the health of workmen; and, what is more important, it combines with camphor exactly as does guncotton, yielding plastic masses quite similar to ordinary celluloid. Camphor can be replaced by other organic substances, and the resultant products range from hard and tough to soft, leather-like, even rubber-like compositions. All of these varied forms of cellit are perfectly transparent, totally unaffected by water, free from brittleness, and, above all, not readily combustible. Some varieties do not burn at all. Others burn in a flame, but combustion ceases when the flame is removed.

"The different properties of cellit are characteristic of glass, gelatin, celluloid, leather, and rubber, and it is capable of replacing each of these materials for divers purposes. Probably new technical applications will soon arise, as we have lacked hitherto a substance at once transparent as glass and pliable as a woven fabric.

"It would seem to lend itself admirably for decorative effects, as it can be molded like crystal or receive the delicate imprint of the finest designs. The sheets of cellit are prepared in all degrees of hardness for the purpose of receiving impressions. The results sometimes resemble enamel, again fine leather, or entirely novel effects are evolved. Especially interesting are the specimens of patent leather and of linoleum coated with cellit. The designs of the linoleum are not printed on the surface of the tissue, but are part of the transparent cellit coating with greatly enhanced effect.

"Cellit insulation for electric wires combines the advantages over the present materials of cheapness and more attractive appearance, while occupying less space.

"A distinct field exists for cellit in preparing waterproof, air-tight containers for perfumery, bonbons, etc.; in meeting many needs of the bookbinder and of the surgeon; in the manufacture of toys, fans, and various articles of domestic use where resistance to water and pliability are the chief requirements.

"To what extent cellit can replace celluloid is not yet definitely ascertained. Certain technical difficulties have recently been overcome in blowing articles of the new substance. Such hollow objects as balls, dolls' heads, and the like are now as easily prepared as from celluloid.

"The latest application is among the most important. It is the use of cellit films for the cinematograph. Its manifest superiority over celluloid for this purpose results from its non-combustibility.

"A cellit film exposed for ten minutes to the concentrated light of an arc lamp does not exhibit the slightest alteration. A celluloid film, under the same conditions, bursts into flame after the lapse of only three seconds. The cinematograph has now entered so extensively into the category of popular entertainments that a film material will be most welcome which will obviate the serious danger thus far attendant upon the employment of the current mechanism and already productive of several tragic catastrophies.

"The acetates first obtained during recent years yielded in combination with camphor more or less brittle substances. Their only satisfactory solvents were chloroform and acetylene tetrachloride. The narcotic action of the first solvent and the poisonous nature of the latter rendered their use most objectionable. These disadvantages, in addition to the brittleness, effectually prevented any practical use of the earlier forms of acetylcellulose for use in the cinematograph, although numerous experiments in this direction were carried on for a long period.

"The newly discovered modification, in its camphor derivative termed cellit, possesses fortunately the desired properties, missing in its homologues. It is the reverse of brittle, resembling leather, and it is readily soluble in the comparatively cheap mixture of alcohol and acetic ether (ethyl acetate).

"With these two all-important properties to start with, much study and experiments were required before a cellit was secured meeting all the many demands

compete with celluloid for general technical use owing to the present great discrepancy in cost of acetic acid, acetic anhydride and acetyl chloride as compared with nitric acid, its present field appears to be in the preparation of uninflammable photographic films, for which purpose it is being produced in large quantitites at the present time. Perhaps at the present time the largest individual user of uninflammable cinematographic films in Europe is the firm of Pathe Frères, of Paris, and it is understood that this firm is at present using a cellulose acetate plastic film, produced by this general method.

made upon cinematographic films. Celluloid (the combination of camphor and guncotton) is characterized by its hardness, springiness, and tenacity. A multitude of difficulties in this connection were gradually overcome, until cellit films were finally prepared, free from liability to tear or stretch or crumple. In the cinematographic apparatus there is now no scratching of the surface, no tearing, no distortion on the part of cellit films when swiftly passed through the mechanism.

"The various other technical difficulties in connection with the application and fixation of the sensitive emulsion, the securing of uniform transparency, etc., have all been successfully met, so that the new films are scarcely to be distinguished from celluloid preparations so far as luster, tenacity, evenness, transparency, etc., are concerned.

"In one respect, however, there is the most striking and important difference, and that is inflammability. When celluloid is brought near a source of heat it instantly takes fire, burning with a large, crackling flame, which spreads so rapidly that all possibility of extinction is practically precluded. On the contrary, when a burning match is applied to a cellit film, it does not take fire at once, but only after an interval. Then a slow combustion, accompanied by a small flame, begins, and is gradually propagated through the mass, very much as in the case of a sheet of india-rubber. A cellit film behaves often as a stick of sealing-wax. It tends to melt, and while the molten substance falls down in drops the flame is often extinguished.

"While cellit films in contact with a flame exhibit such a measure of slow combustibility, they are entirely incombustible in the cinematographic apparatus. Even when exposed to the concentrated rays of the most powerful arc lamp, there is no sign of combustion. When the exposure is prolonged changes become evident in the film; the layer of emulsion is loosened, blisters appear, there is a general shrinkage, and finally fusion begins along the lines of the photographic picture. The action ceases with this result, even if the exposure be maintained for an hour.

"The behavior of a celluloid film under such conditions is all too well known. It is impossible to adjust it in the apparatus without full protection from the source of light. If exposed for a second it begins to smoke, and within four seconds, at the utmost, it bursts into flame.

"This unfortunate property has rendered the cinematograph such a source of danger, when, through any accidental interruption of the rapid movement of the celluloid films before the powerful sources of light, or even through the tearing of a film, instantaneous combustion ensues.

"Preventive measures designed to lessen the danger have been taken in various countries by the police authorities and are of the most manifold variety. There are requirements for the inclosure of the apparatus in a fireproof cell during an exhibition, for its operation in a room covered with asbestos, outside of an exhibition hall, for the use of asbestos clothing by the operators, for the entire absence of flame-giving lights, etc.

"Numerous attempts have been made to replace celluloid as a material for films. Gelatin has been tried in a multitude of forms. Its lack of strength and its tendency to swell up in developing baths have prevented any practical application for the purpose. Even when inclosed between exceedingly thin sheets of celluloid it fails to withstand the effects of the bath. Other albuminous bodies lack in plasticity and transparency."

Eichengrün has also determined[1] that certain types of cellulose acetate, notably those which are soluble in acetone, are soluble, on heating, in mixtures of liquids, e.g., methyl alcohol and benzene, neither of which have any solvent action alone. On cooling these solutions, the ester may either remain in solution or separate out in the form of long felted filaments. The separation may be prevented by adding to the solution any of the ordinary solvents of cellulose acetate, in which it is soluble in the cold, e.g., glacial acetic acid, acetone, etc., in which case the solution remains liquid or becomes syrupy on cooling; or else, there may be added a substance having an influence analogous to that of camphor on nitrocellulose, in which case the solution sets to a continuous mass on cooling. Suitable bodies are methylacetanilide, ethyl toluenesulphonate, trichloraniline, etc. If a very concentrated mass be desired, the cellulose acetate may be dissolved in alcohol and benzene, freed from impurities by filtration and allowed to deposit by cooling; the liquid is then poured off and the precipitated cellulose acetate worked up with a camphor-substitute. One of the numerous examples of the process is as follows: 1 k. of cellulose acetate is dissolved in 2 k. of methyl alcohol and 1 k. of toluene at 80°; 150 gm. of methylacetanilide are added to the solution and 100 gm. of epichlorhydrin. The liquid is filtered hot, and on cooling sets to a solid mass, which may be sliced, molded or pressed through orifices. The spreading of fine films or coatings of cellulose acetate on materials or fabrics of porous or uneven surface is difficult, because the coating tends to sink into or take the form of the body-material. According to Eichengrün[2] a thin film of a solution of the acetate is spread on a support having an even, close or polished surface, to which the film, when fully dried, will not adhere. The film, before it is completely dry, is then pressed in contact with the body-material to be coated, and drying is completed. The film then peels off the temporary support and adheres firmly to the body-material, while its surface presents an exact reproduction of the surface of the support. Suitable supports are made of metal foil, metallized paper, rubber, waxed cloth, varnished leather, etc. The body-material may be previously moistened with a solvent of the acetate in order to promote adhesion of the film.

1. E.P. 1441, 4959, 1910; F.P. 412797, 1910, and First Addition thereto dated Mar. 19, 1910; abst. J.S.C.I. 1910, **29**, 1005; Ger. Appl. filed Apr., 15, 1909. For manufacture of brilliant, frosted or patterned cellulose acetate coatings, see Eichengrün, E.P. 4959, 27258, 1910. See also F. Bayer & Co., E.P. 16932, 1910; Chem. Fab. v. Heyden, E.P. 24382, 1910. J. Aylsworth (U.S.P. 962877, 1910) induces plasticity by adding to cellulose acetate a halogenated aliphatic acid or ester, as chlorinated stearic acid.

2. F.P. 413901, 1910.

H. Reeser[1] has observed that when acetylcellulose, of the type which is soluble in acetone or ethyl acetate, is heated with a mixture of equal parts of benzene and alcohol, it dissolves near the boiling temperature, but separates again on cooling. If the liquid poured off from the deposit and camphor or a camphor substitute be added to the latter, the mixture again becomes fluid on heating, and the product, when cold, forms a plastic solid having the properties of celluloid. For example, 2 k. of acetylcellulose of the type specified are mixed with 20 k. each of alcohol and benzene, the mixture is heated for some time at 60°, and then to boiling until the acetylcellulose is dissolved. After cooling, the solvent is poured off from the mass which separates, 600 gm. of camphor and 400 gm. of acetochlorhydrin are added, and the whole is again heated at 50°, in order to produce a transparent fluid which sets on cooling. If desired, the camphor may be added to the original acetylcellulose and the whole heated with the solvent until dissolved. Homologues of alcohol and benzene respectively may be used.

To prepare waxed paper or cloth, the Raison Sociale Siebert[2] coat with cellit dissolved in ethyl acetate and alcohol to form the dressing, in place of coatings of glue, caoutchouc or starch. L. Lederer has found[3] that the esters of phenols and polyphenols are excellent softening agents for cellulose acetate films, having the advantage of being insoluble in water, and consequently the films retain their elasticity after steeping, washing, and passing through the usual photographic developing processes. In particular, the addition of 1–2% of resorcinol diacetate—calculated on the weight of cellulose ester—is claimed as especially applicable, the diacetate being dissolved in ethyl acetate before incorporation with the acetylcellulose.

Sericose is an alcohol-soluble acetyl cellulose, i.e., an acetylhydrocellulose, patented by Bayer & Co., through their chemists.[4] Strictly speaking, sericose is the name restricted to cellulose acetate by this firm, while acetylhydrocellulose is designated as sericose L by them. Only the latter appears in the trade at present. Sericose L, which is a fine white powder, is soluble in 5% acetic acid to a nearly clear solution, and in this condition, is used with pigments, for the production of matt printing effects (damask effects) on textile fabrics, especially cotton. The solutions vary in consistency according to the amount of sericose used, and adapted for the fixing for any pigments,

1. E.P. 12976, 1909; F.P. 411126, 1909; abst. J.S.C.I., 1910, **29**, 147; see Gum. Ztg., 1910, **10**, 65.
2. F.P. 396467, 1908.
3. E.P. 8945, 1909; F.P. 402083, 1909.
4. U.S.P. 738533, 1903.

such as barytes or China clay, and which are insoluble in acetic acid. The damask effects produced, are said to be distinguished by excellent plastic appearance, pure whiteness, and fastness to hot soaping and rubbing in cold water.[1] In a later process,[2] cellulose acetates soluble in acetone are obtained by acetylating cellulose or its derivatives (oxycellulose, hydrocellulose) in presence of an acid sulphate of a primary aromatic amine. For example, 80 parts of *o*-toluidine bisulphate are dissolved in a mixture of 1200 parts of glacial acetic acid and 1,000 parts of acetic anhydride, and 200 parts of cellulose are introduced into the liquid. The reaction is allowed to continue at a temperature below 70° until a sample precipitated with water and washed and dried is completely soluble in acetone.

The Comp. Franc. des Applications de la Cellulose[3] have called attention to the fact that articles made of artificial silk, or "crinol" filaments, suffer in the natural state from lack of rigidity. According to their invention, such articles, fabrics, trimmings, hat-shapes, etc., are finished by the application of a solution of nitrocellulose, which imparts to them rigidity and impermeability, without detracting from their luster. A 10% solution of nitrocellulose in amyl acetate is stated to be suitable for the purpose.

Dyeing. The cellulose acetates possess but little affinity for dyestuffs, especially for the direct or substantive colors. Wagner, therefore, proposes to use acetylcellulose filaments in conjunction with natural silk where a weave is required showing colorless and colored fibers. The finished cloth is dyed in a bath the dyestuff of which has no affinity for the cellulose acetate, while readily coloring the silk. The acetates differ from the nitrates however, in being but little tendered upon wetting, so that the acetates may be subjected to much longer treatment in the dye bath and at higher temperatures without materially deteriorating. The absorptive power for dyestuffs is much increased if the acetate be soaked for some time at the oridinary temperature in 50% aqueous alcohol or 30% acetic acid. After this treatment and before drying the acetylcellulose is hydroextracted, rinsed and dyed in the usual manner. With this preliminary treatment, basic dyestuffs are readily absorbed from an aqueous dye bath, best with the addition of sodium sulphate or phosphate in amounts

1. In order to avoid precipitation of the sericose by the water used to form a paste with the pigment when producing print colors, care should be taken to add to the pigment, sufficient concentrated acetic acid to give it a total acidity of at least 5%.

2. F. Bayer & Co., F.P. 417274, 1909. See also A. Eichengrün, E.P. 4959, 1910; F.P. 413901, 1910, F. Bayer & Co., E.P. 14364, 1910; F.P. 417250, 1910. Also V. Pauthonier, E.P. 27102, 1909; F.P. 409465, 1909.

3. F.P. 417599, 1909.

equal to 1% by weight of the fiber. It is also claimed [1] that the difficultly soluble anthracene dyestuffs may be used where the ester has undergone preliminary soaking in alcohol. When treated with aqueous solutions of inorganic acids [2] the effect is produced of swelling

1. Knoll & Co. E.P. 24284, 1907; 7743, 1909; F.P. 383636, 1907, have found that acetylcellulose has the power also of absorbing certain amines, phenols and their derivatives from dilute aqueous solutions, thereby allowing the production of developed colors of great fastness to light and washing. For example, if the fiber be soaked for three hours in a 3% aqueous aniline solution, then diazotized in the usual manner with an acidulated 2% solution of sodium nitrite, and developed with a 2% solution of sodium naphtholate, soudan I is produced on and in the fiber. Or the warm impregnated material may be treated with a solution of 14 lb. potassium bichromate and 14 lb. strong HCl in the cold in 40 gal. water, when upon heating the solution for a minute to 80° with the yellow diazotized yarn therein, aniline black is developed within the fiber. Paranitraniline red, exceedingly fast to light, may be formed in the fiber by soaking in a 0.5% solution of β-naphthol, and then developing with diazotized paranitraniline. Or the fibers may be dyed a red color with azo turkey red, by impregnating them with a hot saturated solution of α-naphthylamine for twenty minutes, then diazotizing with acidified nitrite solution and developing with α-naphthol. Similarly α-naphthylamine claret color is produced by diazotizing and coupling α-naphthylamine. while bismarck brown results when the fiber is soaked in a 1% solution of *m*-phenylenediamine and developing with acidified sodium nitrite. The Berlin Aniline Company (D.R.P. 193135, 1907) have found that whereas an alcoholic solution of a basic dyestuff has but a slight coloring effect on acetylcellulose, and an aqueous solution practically none, yet when the two solutions are mixed in about equal amounts acetylcellulose is dyed full shades. The process is carried out by dissolving the dyestuff in diluted alcohol, and dyeing either cold or warm in the usual manner. E. Knoevenagel (F.P. 383636, 1907; U.S.P. 961241, 1910; abst. J.S.C.I., 1908, **27**, 332) has carried this generalization a step further, and determined that acetylcellulose assumes intense colors in aqueous dyestuff solutions, if the surface of the fabric of acetylcellulose has been previously modified, by treatment with those organic substances such as alcohol, acetic acid and acetone, or their aqueous solutions, which are capable of swelling up acetylcellulose.

The process consists in treating the filament or other product of acetylcellulose, at ordinary or elevated temperature with such substances for a period depending on the nature of the organic substance selected, and on whether the substance is used *per se* or in aqueous solution, preferably by introducing the fabric into the substance or its aqueous solution and allowing it to remain therein for the required time, then wringing, rinsing with water, and finally dyeing in an aqueous dyestuff solution by one of the ordinary dyeing processes. For instance, filaments of acetylcellulose may be allowed to remain in 50% aqueous alcohol or in dilute glacial acetic acid or in a mixture of alcohol and acetone in equal volumes for twelve hours at the temperature of an ordinary living room. Concentrated alcohols will also enhance the dyeing capacity of acetylcellulose, although not as efficiently as mixtures of alcohol with water. Even substances which are insoluble in water, such as aniline and ether, enhance to some extent the capacity of cellulose acetate for the absorption of dyestuffs in the process of dyeing in aqueous solutions, provided that the acetylcellulose is allowed to remain in the liquid for a considerable time. Even solutions of soap, especially when used warm, act in the same direction, but more feebly than dilute alcohols.

The dyestuffs, as methylene blue, malachite green, fuchsin, safranin and others and even those dyestuffs which are not soluble or only sparingly soluble in water, such as the anthracene dyestuffs, also vat dyestuffs are rapidly taken up from aqueous dye-baths by acetylcellulose prepared as described above and are claimed to yield substantially more intense colorations than acetylcellulose which has not been thus treated.

2. Knoll & Co., Addition dated Apr. 5, 1909 to F.P. 383636, 1907; abst. J.S.C.I., 1908, **27**, 332, in which the acetylcellulose is treated with aqueous solutions of inorganic acids instead of with organic substances or their solutions, in order to make

the fiber, increasing its elasticity and receptive power for dyestuffs, without any accompanying hydrolytic dissociation. The two points necessary are to eliminate all traces of the acid from the fiber after treatment, and to dye the fiber before drying.[1] The speed of absorption of basic colors (methylene blue, fuchsine, saffranine, auramine, methyl violet, victoria green, etc.) may be materially increased by the addition of 1% of ammonia to the dye bath. The usual time of immersion is thirty to forty minutes at 50°, keeping the hanks continually in motion in order to insure level dyeings. C. Able[2] prefers to dye in the cold in order to obtain more even results, but uniform coloring may be obtained at higher temperatures and with equally satisfactory results, especially if the hanks are continually turned. H. Mork has shown[3] that the lower acetates of cellulose, monoacetate or diacetate or any product of intermediate composition, may be prepared by the partial hydrolysis of the triacetate. It is known that only in this highest degree of acetylation are the cellulose esters capable of being formed into films or threads. Consequently, the latter are first produced from the triacetate and then submitted to the limited action of a hydrolyzing agent: sodium hydroxide, ammonia, or sodium carbonate. In this way the films or threads may be converted superficially or in patterns or designs into the lower acetates of cellulose, which possess hygroscopic properties different from those of the triacetate. This conversion is stated to be advantageous in the case of backing-films for photographic emulsions or in the case of artificial silk which has to be dyed.

Cross and Bevan[4] have evolved a process for treating cotton so

it capable of absorbing dyestuffs and dye-forming substances more readily. This treatment with inorganic acids has also the effect of swelling the fiber and increasing its elasticity without any accompanying hydrolytic dissociation. It is necessary to eliminate all traces of the acid from the fiber after treatment and to dye the fiber before drying. See Fürst Guido Donnersmarck Kunstseide u. Acetatwerke, D.R.P. 197965; 219848, 1908.

1. See also F.P. 362721, 1906.

2. E.P. 1939, 1906; according to the preferred method of the Berlin Aniline Co., a dyestuff (as fuchsine) 0.2, is dissolved in a mixture of water, 50, and acetone, 50, and into this bath is introduced the threads of artificial silk, about 2, operating in the usual manner, for one-half to one hour, then carefully washing with lukewarm water, pressing and drying with heat, at 80–100°.

3. F.P. 416752, 1910.

4. Prize method in Jour. Soc. Dyers and Col., 1908, **24**, 189; U.S.P. 920828, 1909. In preparing such mixtures the liquid constituents are first mixed together and the zinc oxide added in small quantities at a time, the mixture being stirred and cooled if necessary until the whole is dissolved.

When the zinc chloride is used as such, a suitable mixture is prepared by dissolving 20 parts of commercial zinc chloride in 80 parts of glacial acetic acid and adding to the solution 100 parts of acetic anhydride, these proportions being suitable for obtaining a gain of weight amounting to 20–40% according to the quantity used.

It is to be understood that the degree of modification produced is not dependent

that it entirely resists the action of substantive dyestuffs, by superficially acetating the fiber. The method consists in digesting the previously dried cotton with a mixture containing acetic anhydride, glacial acetic acid, and zinc chloride. The composition of the mixture varies with the degree of acetylation required, the amount of acetic anhydride being proportional to the degree of acetylation, and the proportion of zinc chloride being from 10–20% of the mixture. The different degrees of acetylation are controlled by keeping the proportions of liquid and cotton approximately constant, and by varying the acetic anhydride concentration.

Suitable mixtures for a hard yarn may be made as follows:

Mixture A: For Gain of 26% on the Cellulose.		Mixture B: For Gain of 34% on Cellulose.	
Acetic anhydride	42 parts		42 parts
Acetyl chloride	11½ "		11½ "
Glacial acetic acid	50 "		25 "
Ignited zinc oxide	6½ "		6½ "
	110		85

Of A use twice the weight of the dry cotton. Of B use 2.3 times the weight of the dry cotton. The fiber can be caused to gain in weight from 26–34% by varying the acetic anhydride concentration. In addition to resistance to substantive dyestuffs, the treated yarn shows an increased affinity for basic dyestuffs. Cloth so treated resists the action of cold mercerizing for a sufficiently long time to permit differential mercerization of mixed fabrics. The acetylating process can be applied to cotton fabrics in the piece, and imparts a finish and

solely upon the degree of dilution of the reagent. Thus smaller proportions of the more concentrated mixture will produce results equivalent to those obtained with a larger proportion of the more dilute mixture. In fact the proportions of acetic anhydride, zinc chloride and acetic acid may be varied within wide limits according to the material treated and the degree of modification to be produced.

When the cellulose material has been saturated with the reagent, the action may be accelerated by packing the material in a closed vessel which is placed in a thermostat regulated at a temperature of 35–40°. After a period of thirty-six to forty-eight hours at this temperature, or a longer period if the material has been left at the ordinary temperature, the reaction is complete and the cellulose removed and washed with water until free from soluble products.

When it is desirable to prevent shrinkage the hanks of yarn or the fabric may be kept under tension during the treatment and during the washing also or during the washing only, if necessary.

When the cellulose is to be converted into a hard, nearly waterproof material corresponding with a gain in weight of 40–50%, it should be treated with 3–4 times its weight of the more concentrated mixture, or with a smaller proportion of a mixture containing less acetic acid. In the former case the cellulose should be turned over from time to time during the progress of the reaction in order that the excess of liquid may be uniformly absorbed. See also C. Cross and J. Briggs, F.P. 383064, 1907.

firmness resistant to careful washing. In this manner industrial advantages are derived from the fact that the normal hygroscopic moisture of these acetylated cottons is only about one-half of that of the untreated cotton.[1]

Acetate Lacquers, unlike pyroxylin lacquers, are uninflammable —both the solvent and cellulose acetate—and are insoluble in and hence immiscible with amyl alcohol and amyl acetate; but the acetylhydrocelluloses prepared according to the method of Eichengrün and Becker are soluble in acetone and in a mixture of ethyl alcohol and ethyl acetate, and hence are miscible with pyroxylin lacquers in limited amounts. These lacquers may be produced by dissolving the cellulose acetates in certain halogen-substituted methanes and ethanes, chloroform and tetrachlorethane (acetylene tetrachloride) being the most used. The latter is known under the commercial name of vitran. Depending on the degree of hydrolysis of the cellulose before acetation, the neutral ester is dissolved in chloroform, tetrachlorethane, acetone or ethyl acetate and alcohol by means of mixing devices described in Chapter IX., and after complete solution results the lacquer is filtered from unattacked cellulose fibers. If it is desired to

1. If a piece of the treated fabric be immersed for three to four minutes in caustic soda solution of 40° Tw., it is stated that the stripes of ordinary cotton are mercerized and shrink, while the stripes of acetylated cotton resist this action. If the fabric is not washed and scoured as soon as the differential mercerization is completed, a slow saponification of the acetate will commence. The mercerization throws up the stripes, while the dyeing phenomenon is not essentially changed. L. Lederer (E.P. 11625, 1909) has taken advantage of the fact that artificial threads spun from solutions of cellulose and nitro- or acetyl-cellulose differ in their behavior toward water and dyestuffs. Cellulose threads are readily dyed, but lose in tensile strength by the absorption of water, The cellulose esters on the other hand are not affected by water but do not easily take up dyestuffs. The advantages of the products may be combined by producing a mixed thread of nitro- and acetyl-cellulose and then denitrating, the resulting thread, being easily dyed and possessing good strength even in the moist condition. The solution for spinning is prepared by dissolving 6 parts of trinitrocellulose and 2 parts of triacetylcellulose in 27 parts of acetone and 16 parts of acetylene tetrachloride. The solution is homogeneous, even though acetylcellulose is not dissolved by acetone alone and nitrocellulose is insoluble in acetylene tetrachloride. Filaments are produced from the mixed solution by precipitation with alcohol. Films may be made in a similar manner, and these by denitration do not change their external appearance; they take up dyestuffs easily, are quite transparent, and on account of their low degree of inflammability may replace celluloid films in photography and similar industries. Heusserman (D.R.P. 210778, 1909; Chem. Zeit., 1905, **29**, 667; Lehnes Färb. Ztg., 1905, **16**, 248), produces a mixed acetonitrate by a different method. He dissolves an acetylhydrocellulose in 15 times its weight of fuming HNO_3 and allows the solution to remain fourteen days, at the end of which time it has become clear and less viscous. On pouring into water, a product is obtained which dries to a fine white powder soluble in acetone, ethyl acetate and amyl acetate. The product is regarded as a nitrate of hydrocellulose derived from the acetate by the displacement of the acetyl groups and their partial substitution by nitric acid. The substance was explosive and contained 11.5% N. On denitration by sodium hydrosulphide the corresponding hydrocellulose was obtained as a white powder completely soluble in cold 10% NaOH and capable of reducing Fehlings Solution.

prepare a mixed resin-acetate lacquer, the resins soluble in chloroform or especially acetylene tetrachloride, are preferably ground fine, agitated with the solvent until complete solution results, the resin solution filtered through moleskin or flannel, and this solution incorporated with an acetylene tetrachloride solution of cellulose acetate in the proportions desired. The properties and hence uses of this class of lacquers may be varied within wide limits by varying the speed of evaporation of the solvent, from acetone boiling-point, 56°, to acetylene tetrachloride boiling point 146°, in this respect having a wider range of boiling points and hence speeds of evaporation than with the corresponding pyroxylin lacquers. Copal (kauri), sandarac, mastic elemi and dammar are soluble in acetylene tetrachloride, the more refractive being aided by the application of a gentle heat. Unlike an acidified cellulose nitrate solution which rapidly loses its viscosity from the traces of free acid, cellulose acetate solutions containing small amounts of free acetic or nitric acids do not become less viscous on standing. The viscosity of a chloroformic or tetrachlorethane solution may be varied at will by decreasing or increasing the temperature or concentration or length of immersion of the cellulose in the acetating bath in a similar manner to the preparation of cellulose nitrates (see Chapter III). Cross and Bevan[1] have patented a process for a cellulose acetate lacquer employing chloroform as the solvent, while the patented method of Lederer[2] comprises a 10% solution of the ester in acetylene tetrachloride. H. Zwick has modified his original nitrocellulose lacquer process[3] by substituting cellulose acetate instead.[4] Lacquers so produced are transparent, colorless, of an adhesiveness which compares favorably with the nitrates, are several times more expensive to produce, and for this reason alone have, as yet, not been used in the United States to any great extent outside of coating fine copper wire.

As W. Doerflinger has pointed out[5] the ready-mixed bronze or gold paints heretofore known have suffered from various defects which have greatly restricted their field of usefulness. Some of these paints when stored in metallic cans spoil in a short time, either by coagulating to a jelly-like mass, or by turning green, or by the bronze powder settling in a lumpy mass on the bottom of the can or other vessel in such a way that it cannot again be satisfactorily mixed with the liquid ingredients of the paint. Others of these paints are of such

1. E.P. 9676, 1894; 6751, 1905; see F.P. 352896, 1905; U.S.P. 804960, 1905.
2. F.P. 352897, 1905.
3. D.R.P. 211573, 1907; Addition to D.R.P. 211520, 1907.
4. See J.S.C.I., 1909, **28**, 843.
5. U.S.P. 884475, 1908.

thin viscosity as to float the pigments very imperfectly, require a disproportionately large amount of bronze powder, and produce thin coats of poor appearance and little durability. Others of these paints produce coats which are either dull and unattractive when new, or soon lose their luster. In order to overcome these defects, found in bronzing fluids with nitrocellulose as a base, a fluid is prepared according to the following method: 6 oz. cellulose acetate are dissolved in 1 gal. of acetone, and 8 oz. anhydrous sodium carbonate added. The solution is well stirred, allowed to settle, the clear solution is decanted off, and 1.5 lb. of metallic gold bronze powder are mixed therewith. The bronze powder is usually an alloy of copper with one or several lighter metals, for instance, zinc, tin or aluminum. Other substances added should be of such nature or should be so treated that they do not react injuriously with the bronze or other powder or the tin cans or other receptacles. Gum resins and oils, particularly castor oil, may be employed.

The mixed paint is said to keep well in tin cans and other vessels, does not react with the bronze powder or the tin of the cans, works well under the brush, and produces a durable and brilliant coat which preserves its luster for a long time. F. Bayer & Co.[1] coats thread with bronzes mixed with cellulose acetate to produce brilliant filaments with metallic luster.

The manifold uses which have been found for pyroxylin lacquers are all open to cellulose acetate lacquers when they can be produced at a cost which will admit of favorable competition. These lacquers are at present indicated for use in the preservation of valuable medals, copper and bronze replicas, and in photo-etching of valuable plates, where the first cost of the lacquer, from the small amount required, is not an important consideration.

In the United States the most important use for these lacquers at present is in the insulation of very fine copper wire, where it has found considerable use in the hands of the General Electric Company at Lynn, Mass.[2] Its electrical insulating properties are

1. F.P. 408370, 1909.

2. According to R. Flemming of that Company (General Electric Review, Jan., 1908; Eng. News, 1908, **59**, 59) "insulated copper wire has become such a ruling factor in the design and manufacture of electrical apparatus, that any process which reduces either the cost of the insulated wire, or the amount required, is of great commercial importance.

"Silk and cotton are about the only materials which have been used in the past for insulating purposes. The former is relatively expensive, while the latter, though cheap, unfortunately occupies a large proportion of the winding space, especially when the wire itself is small.

"Various chemical solutions have been applied to wires in the attempt to secure a thin, though permanent insulation, which would be more economical to use than silk or cotton.

far superior to either rubber or gutta percha. Copper wire of 0.07–0.17 mm. diameter is insulated by applying a coat of the ace-

"Cellulose acetate, enamel, collodion, casein, albumen, glue, rubber, silk, solutions, etc., were tried with more or less favorable results, but for commercial purposes cellulose acetate and enamel have proven to be the substances best adapted to the insulation of copper wires.

"The mechanical properties of the cellulose acetate film make it a desirable insulating medium for very fine wires. Its elasticity permits of considerable stretching of the wire before rupture takes place, thus insuring continuous insulation between wires on the finished coil. Its specific resistance is very high, so that the film, even though thin, provides ample insulation between turns and between the layers of superposed wire. The evenness of the coating, and the regularity with which the film can be applied to the wire, are important advantages; the finished wire is free from imperfections of coating, and presents an attractive appearance.

"This insulation can be colored any desired shade to harmonize with the surroundings. In case of very fine wire, a bright green makes a satisfactory color, rendering it easy for the operators to see the wire, and to detect irregularity in the winding; but if these fine wires are colored a neutral tint, they are practically invisible, and winding them is a difficult operation.

"The sizes of wire best suited to this process are from 0.003 in. in diameter, or even finer, to those as large as .005 in. For larger sizes, the enamel coatings are more suitable.

"Cellulose acetate is especially valuable for the windings of meter armatures, where light weight is of great importance.

"The following tabulation shows some of the more important comparisons of data:

.003 Diam. of Copper.	Acetate.	Single Silk.	Single Cotton.
Thickness of insulating film.	.0005	.0009	.00175
Wire space factor	.442	.313	.167
Wt. per thousand feet (lbs.)	.033	.036	.049

"With acetate coated wire the greatly improved space factor means, that for a given number of turns on a given form, the mean length of turn and total weight of wire are greatly reduced. This is shown in the following tabulation, which is drawn up on the basis of a perfect winding:

"Diameter of spool, 1 in.; Length of spool, 1 in.; Number of turns, 100,000; Diameter of copper, .003 in.

Insulation of Conductor	Outside Diam. of Coil (Inches).	Resistance (Ohms).	Weight of Coil (Lbs.)	Price per pound to give same cost of coil.
Acetate	4.20	71300	2.22	$7.50
Single silk	5.53	89500	3.04	5.50
Single Cotton	9.50	144000	6.73	2.50

"Another advantage of acetate wire is that it is not affected by ordinary atmospheric conditions, whereas all fibrous materials absorb large quantities of moisture. Complete drying and impregnating processes are necessary for fibrous insulations, if long life is to be expected of them.

"Manufacturers of telephones and other specialties, who use fine wires, find film-coated wires of great service in reducing the cost, and also the size, of their apparatus.

"In the Lynn acetate wire-coating machines the solution automatically passes from the mixing reservoirs to the coating portion of the apparatus. Here, by a system of transfer wheels, the solution is applied to the revolving coating roll, which, in turn, deposits it on the moving wire. The quantity of solution placed on the wire must be adjusted to a nicety; therefore mechanical scrapers are employed, which remove the excess and leave just the proper amount to be deposited on the wire.

tate, the concentration of which and the speed of drawing the wire through the solution being so adjusted that a coat is applied of about 0.02 mm. in thickness. Wire thus coated has not only a high insulating capacity, but is more compact and possesses an extremely low specific induction. It adheres to copper with great tenacity, and unlike a cellulose nitrate coating, there is no danger of the copper being attacked and turning green. A. Campbell,[1] who has made elaborate comparisons of the insulating efficiency of certain cellulose derivatives, finds that the triacetate is several times more efficient than the corresponding nitrate, and is especially valuable for telephone wires where a minimum specific inductive capacity is required. The cost of copper wire insulated in this manner[2] does not materially differ from that of silk-insulated wire, the latter being far inferior. Therefore it appears that cellulose acetate lacquers will find in the near future extensive use in the electrical industries. F. Bayer & Co.[3] have patented such a process for coating wire. They[4] have devised a method for textile printing by the use of spirit-soluble cellulose acetates as substitutes for thickening or fixing agents, such as albumen, gum, starch, tragacanth, etc. In one of the examples given a printing color made up with 40 gm. zinc dust, 60 gm. of a 5% alcoholic solution of acetylcellulose, 20 gm. glycerol, and 10 gm. acetone is printed on a piece of fabric (cotton) dyed with geranine G. The piece is dried and steamed for ten minutes without pressure, when a white pattern on a red ground results. According to another example, 1 gm. methyl violet B. is dissolved in 16 gm. water and 20 gm. acetic acid of 9° Tw. This is washed with 60 gm. of an alcoholic solution of cellulose acetate, until all is dissolved, when the mixture is allowed to cool. The acetic

"After receiving its coating of solution, the wire passes through the oven at the rate of several hundred feet per minute. The volatile solvent is here driven off and the coating hardened, after which the process is repeated until numerous coatings have been applied. This method insures an even distribution of the film over the whole surface of the wire.

"To keep the fine wire moving at such a high rate of speed, a very delicate adjustment of the moving parts is required, for the slightest unevenness of motion is sure to break the wire. This is prevented by friction drives and friction tension devices, which insure a perfectly uniform motion."

1. Proc. Roy. Soc., 1906, **78-A**, 196. It was found that for transparent films of pure cellulose, the specific induction capacity is about 7, and normal cellulose triacetate about 3.8.

2. See "Estimate of Acetate Wire," by W. Doht, Chem. Ztg., 1907, **31**, 312; Zeit. ang. Chem., 1907, **20**, 743.

3. E.P. 18193, 1909.

4. F. P. 341007, 1904. In coating metallic wires or ribbons with cellulose acetate either plain or mixed with metallic powder or pigments, F. Bayer & Co. (F.P. 408370, 1909, and First Addition thereto dated Apr. 13, 1910; abst. J.S.C.I., 1910, **29**, 1064) have found that a better adhesion of the coating is obtained by first wrapping the wire or ribbon with tissue paper, cotton or similar material. See F. Meyer, F.P. 393963, 1908.

acid which has evaporated is replaced by fresh acid, and in addition 3 gm. tannin in acetic acid (1 : 1) are added. The goods are printed with this color, dried, and steamed for ten to twenty minutes. Mme. Roggen Kämper [1] has described a process for producing an impermeable and washable linen, by placing the linen first in a solution of acetylated cellulose, and after drying giving it a coating of nitrocellulose.

Cellestron Silk and Artificial Filaments from Cellulose Acetates, sometimes also called "Acetate Silk," differs from the artificial threads heretofore described in being an ester, and not a form of cellulose modified or degraded by the cycle of chemical treatments to which it has been subjected in the various manufacturing processes from the original cellulose to the finished thread. The properties of the nitrocellulose, cuprammonium and viscose silks, especially in their relations to water, are substantially those of cellulose in a more or less modified form. In this respect the acetate silks have the advantage over all other forms of artificial silk herein described, in that they are but little affected by cold or warm water, the radicals in combination with the cellulose molecule constituting an essential and integral part of the finished "silk." As the tensile strength of the artificial filaments described before are greatly influenced by the moisture they contain—all absorbing water readily and being greatly weakened while wet, due to the modified cellulose of which they are composed—so the acetate silks, more nearly approaching in resistance to moisture and other properties the nitrocellulose filaments before denitration, possess all the valuable properties of the latter, without their inflammability.

The general method for forming acetate filaments [2] or ribbons is to discharge a thick cellulose acetate solution either in chloroform or ethyl acetate and alcohol through fine orifices or narrow slits into some liquid which dissolves out the solvent without attacking the cellulose acetate. For instance, a solution of the acetate in acetic acid or phenol may be discharged into alcohol, and the precipitated product subsequently dried. The solution of acetylcellulose may be forced

1. F.P. 407932, 1909.

2. F.P. 330714, 1903. According to K. Hofmann (D.R.P. 227198, 1909) products having considerable brilliancy and toughness may be obtained by dissolving cellulose, oxycellulose, or cellulose hydrate in mixtures of concentrated acetic and phosphoric acids, and precipitating by means of water, solutions of salts, alcohol, etc. The phosphoric acid is preferably concentrated by heating to 220° so that a portion of it is converted into pyrophosphoric acid; it may also be further dehydrated by addition of acetic anhydride or sodium acetate. For example, 20–25 gm. of cellulose are shaken with a mixture of 30 c.c. concentrated phosphoric acid and 300 c.c. glacial acetic acid, at the ordinary temperature, until a viscous mass is obtained, which can be pressed through capillary orifices or slits into aqueous or alcoholic coagulating solutions, and the products washed and dried under tension

through capillary tubes into rooms heated above the boiling point of the solvent (chloroform, for instance) when the acetate solidifies into a thread and may be directly wound off, the receiving chamber for the acetate being in reality a vacuum-distilling apparatus where the major portion of the solvent is recovered and utilized again.[1] In forming continuous bands and ribbons, the use of a fine slit instead of capillary orifices, and forcing the solution through by means of pressure, is the method usually employed, and is conducted in a manner similar to that described in Chapter XIII. Continuous films for photographic use are to be made in this manner, to which camphor, acetylene tetrachloride or other plastic-imparting material may be added, sufficient solvent being present to impart the required fluidity for expulsion through the narrow slit. Benzene, toluene, benzine, 85% ethyl alcohol or 90% acetone have all been advocated as satisfactory coagulating media. According to Knoll & Co.,[2] a solution may be prepared that may be kept for long periods without affecting its viscosity, and may be spun directly into threads without the elimination of acids, by introducing cellulose 1 (part by weight) into glacial acetic acid 8, benzenesulphonic acid 4–8, and acetic anhydride 3, keeping the temperature at 50–60° until the cellulose is completely dissolved, which requires from 1–1.5 hours. When the solution is then poured into water, alcohol or other precipitating agent, the sulphonic and acetic esters are thrown out, and, as stated, may be spun without neutralization. According to another method, a cellulose acetate especially applicable for manufacture into filaments may be prepared by adding 100 gm. acetate to 1,000 gm. chloroform and 50 gm. cresol, the acetate being brought into solution by vigorous shaking; 50 gm. oleic acid are dissolved in 200 gm. chloroform, and added to the first solution, all being then carefully filtered. The coagulating bath indicated is petroleum hydrocarbons, terpenes such as camphor oil or oil of turpentine, the filaments upon issuing from the coagulating bath being wound upon reels, and held under tension while the remaining solvent is being volatilized by heat. The physical properties of softness and elasticity may be modified over a considerable range by the introduction of softeners other than oleic acid, as acetylated castor

1. F. Bayer & Co., E.P. 7346, 1903; 28733, 1904; F.P. 317007, 1901; 350442, 1904. Thiele (Jour. Soc. Dyers Col., 1908, **24**, 294) states that after a time solid cellulose acetate becomes crystalline in structure with loss of luster.

2. F.P. 369123, 1906; 376578, 1907; cotton thread is coated with acetylcellulose in a manner similar to the insulation of copper wire, to produce an artificial silk or horsehair impervious to water. In F.P. 330714, 1903, there is given a process for producing threads by discharging the thick acetate solution through orifices into liquids which extract the solvent without acting on the acetate, as for instance when a phenol solution of the acetate is discharged into alcohol.

oil, castor or cottonseed oils, menthol, eucalyptol, oil eucalyptus, phenol or various turkey red oils (sulphonated castor and cottonseed oils).[1]

F. Bayer & Co.,[2] are authority for the statement that an exceptional brilliance may be imparted to yarns which have been coated with cellulose esters by "filling" them with a preparation containing substances capable of softening, swelling or dissolving the coating. Alcohol, substituted alcohols, acetone, ethyl acetate, organic or inorganic acids are suitable for this purpose. Example: The material is treated for some minutes with a mixture containing 300 gm. rice starch, 3000 gm. water, 50 gm. Senegal gum, 75 gm. acetin and 150 gm. alcohol. The excess of filling is next removed and the yarn finally dried and polished. They have found[3] that in the coating of threads with cellulose acetate, with or without metallic powders or pigments, the addition of certain organic substances is advantageous to increase the pliability of the coating layers. The organic substances mentioned include certain amines, anilides, amides, imides, ethers, esters and halogenated derivatives. Specific examples relate to ethylbenzoyl-*o*-toluidine, acetin and acetylbenzyl-*o*-toluidine.

In comparison with other merchantable silks, cellulose acetate filaments are distinguished for their uninflammability, resistance to moisture and dyestuffs, ability to incorporate within the fiber large amounts of softening agents, and hence capable of great pliability. At present per unit weight, they are the most expensive of the artificial filaments, but lose no weight after manufacture, as with the nitrocellulose silks, which often decrease in weight 30–35% upon denitration. In the preparation of carbon filaments from cellulose acetates A. Little[4] takes a quantity of cellulose, with 6–8 times its weight of acetic anhydride, and heats it in a sealed tube, to say 180°, producing a solution of cellulose acetate, forming the filament by forcing the solution thus obtained through a small aperture into water in which the cellulose acetate is insoluble, or by forming it into sheets of suitable thickness, which may be done by pouring the solution upon glass, allowing it to dry, then dipping it into water and stripping off the sheet, and finally drying and cutting it into strips. The strips obtained by either method are then carbonized and flashed as usual. A. Herzog[5] has studied "acetate silk" under the microscope and

1. Process of H. Mork, A. Little, and W. Walker, U.S.P. 712200, 1902; Mork, Walker and Little, U.S.P. 792149, 1905. See also U.S.P. 709922, 1902.

2. F.P. 417027, 1910.

3. Second Addition, dated June 11, 1910, to F.P. 408370, 1909.

4. U.S.P. 532468, 1895. For the industry "des passementerie," see Ind. Text., 1903, **19**, 209.

5. Chem. Zeit., 1910, **34**, 347. Examination of acetate silk made by the Henckel-Donnersmarck works showed the following: Average diameter of fiber, measured

finds that the single fibers appear as uniform cylinders with occasional band-like thickenings; the transverse section is oval or circular with relatively large notches, the thickenings appearing as irregular rectangles. The average diameter is 42.3μ, with a variation of about 2.9%, the average area of the cross-section is 0.001234 sq. mm. (= 1234 sq. μ). Acetate silk is feebly doubly refractive. Its refractibility is about the same as that of lemon oil, in which it becomes practically invisible (the older makes showed splinter-like impurities having a strong double refraction). The strength of a thread of 18 single fibers was found (by a Schopper testing machine) to be equal to 226.25 gm. when dry and 128.85 gm. when wet (=10.22 and 5.8 k. respectively per sq. mm. of cross-section). Acetate silk is soluble in cold acetic acid; it is not soluble in ammoniacal copper hydroxide; it is colored yellow by iodine and sulphuric acid, also by zinc chloride and iodine. It burns quickly, giving off a disagreeable odor and leaving a puffed-up charcoal. Gelatin silk is the only other artificial silk having an equal uniformity of fiber and likewise not showing any dichroism when dyed with congo red. Acetate silk is distinguished from all other artificial silks by its very low density (1.251), by not swelling in water, and by its greater strength when wet.

Solidified Spirit (Solid Spirit, Solidified Alcohol, Smaragdin) comes into commerce into cubes about 1 inch square, and consisting of cellulose acetate 8–15%, containing denatured ethyl alcohol 85–92%, and is intended for the ready transportation of alcohol by travelers for cooking purposes.[1] A product intended for similar use but consisting of the nitrate instead of acetate has been patented,[2] the

in water, 42.3 μ. The diameter varies several per cent in different parts of the same fiber. Under the ultramicroscope, a sort of cellular structure is shown. It appears much like collodion silk, and does not show polarization between cross nicols in the ultramicroscope, as does the older acetate silk. The sp. gr. is 1.25, against 1.36 for true silk and 1.50 for artificial silk from cellulose by Sweitzer's reagent. The strength, taken on a Schopper tester, is shown below in comparison with other artificial silks in k. per sq. mm.: True silk, 37.0 (dry), 37.0 (wet); Chardonnet silk, 12.0, 2.2; Fismes silk, 7.8, 1.6; Walston silk, 22.3, 1.0; Lehner silk, 16.9, 1.5; cellulose silk, 19.1, 3.2; gelatin silk, 6.6, 0.0; acetate silk, 10.22, 5.8.

1. Process patented by F. Bayer & Co.; it may be prepared by dissolving 100 gm. cellulose triacetate in 500 gm. glacial acetic acid and pouring the mixture into 2 l. alcohol. The excess of glacial acetic acid and alcohol is removed from the gelatinous precipitate formed, the latter being dried and kept in closed vessels until used.

2. V. Perelzveich and G. Rosenbusch, U.S.P. 919759, 1909; E.P. 26915, 1907; the disadvantages of some of these preparations are that they decrease the calorific value of the alcohol materially, or during the combustion of the mass leave such large quantities of residue that the continuous burning of the mass is interfered with, or else they have a tendency to become liquefied when burning, occasionally exploding when ignited. The suggested formula consists in producing tristearin synthetically, as described in Beilstein, I, 421, or Holleman, 1899, 171, by heating glycerol and stearic acid for some time at a high temperature, and add to denatured ethyl alcohol a mixture of about 3% tristearin and 5% "sodium sebate." After

inflammable nitrate causing a more rapid combustion of the mass. The speed of ignition may be varied by combining cellulose acetate and nitrate, a satisfactory formula being cellulose acetate 6, cellulose nitrate 8, ethyl acetate 10, denatured ethyl alcohol 76 (all parts by weight).

Analytical. The determination of acetic acid radicals in cellulose acetates may be accomplished by one of the following methods:

(1) *Method of Ost.*[1] The cellulose acetate, carefully dried and in amounts of 2–3 gm., is dissolved in a cold mixture of equal volumes of concentrated sulphuric acid and water, allowed to stand for two days, and then distilled with steam, continuing for four hours. The distillate is titrated with standard alkali. The method is accurate and reliable, but slow on account of the length of time of the steam distillation.

(2) *Sodium Ethylate Method of Cross and Bevan.* (See Chapter II.) Saponification is carried out by allowing the ester to stand in the cold with a half-saturated solution of sodium ethylate for twelve hours in a closed flask. Although the method was originally proposed for the saponification of cellulose benzoates and acetosulphates, Woodbridge[2] obtained best results by allowing the mixture by ester and ethylate to stand for sixteen hours in the cold with an excess of a solution prepared by dissolving 23 gm. sodium in 2 l. of 95% alcohol, the only caution required being that the saponification solution should be used in adequate excess, preferably about double the quantity theroetically required.

(3) *Method of Green and Perkin*,[3] in which the cellulose acetate is decomposed by digesting with absolute alcohol and a little concentrated sulphuric acid until about half of the liquid has evaporated. More alcohol is added and the operation repeated three times. In applying this method unrestricted to a large variety of esters in various combinations, the conditions favorable to the formation of ethyl acetate and analogous compounds must be taken into consideration. This is especially true in attempting to analyze acetylhydrocelluloses by this method.[4]

the mixture has dissolved, an alcohol-ether solution of nitrocellulose of about 1% is added, which after a short time causes the whole mass to gelatinize and eventually solidify.

1. Zeit. ang. Chem., 1906, **20**, 995. 2. J.A.C.S., 1909, **31**, 1068.
3. J.C.S., 1906, **89**, 811.
4. H. Mork reports (J.A.C.S., 1909, **31**, 1069) that it is possible to overcome the objections to saponification with alcoholic potash in the usual manner, by suitable dilution of the saponifying mixture with water. He finds that with the ordinary triacetate, the suitable proportions are 1 volume each alcohol and water, complete saponification being effected by boiling the acetate with a half-normal solution of this character for one hour, when correct values are obtained.

In camphor-containing acetate plastics, the camphor may be estimated as described in Chapter XIV, the residue being used for the determination of the acetyl groups as described above. In acetate lacquers the ester may be precipitated by water, benzine or benzene, dried and determined. In certain camphor-containing plastics the camphor and acetate may be precipitated by the addition of water to a chloroformic solution, the chloroform separated, camphor and acetate filtered off, and the former then extracted with benzene, when the ester may be directly weighed after drying.

The following article by Carl G. S. Schwalbe appeared in Zeit. ang. Chem., 1910, **24**, under the title "The Acetylation of Cotton Cellulose," and from the deductions as to formation of acetylhydrocellulose and the experimental work on the "copper value" of estimation of acetic acid esterification, in accuracy and completeness, must stand as a notable contribution in the field of cellulose chemistry. It is produced herewith, practically verbatim in justice to the author, although some of the references are repeated, as occurring in previous portions of this chapter.

In 1869 Schützenberger [1] prepared an acetyl derivative of cellulose by heating cotton cellulose with acetic anhydride in a closed tube to 180°. An essential lowering of the temperature of reaction, namely to 120–130°, was accomplished later by Franchimont,[2] by the addition of small quantities of zinc chloride. As was shown by the investigations of Cross and Bevan [3] and Skraup,[4] far-reaching decomposition takes place at these temperatures. Acetylization at temperatures of about 30° was accomplished by Cross and Bevan [5] with magnesium or zinc acetate.[6] By the addition of an indifferent solvent, Count Guido Henckel Donnersmarck [7] succeeded in preventing the injurious rise of temperature which occurs in carrying out the process on a technical scale.

The processes mentioned only show the esterification of precipitated cellulose. For ordinary cellulose, the acetyl chloride process becomes applicable only by the addition of pyridine or quinoline, according to Wohl,[8] but this process requires that the temperature be again raised to 80–90°. As Lederer [9] shows, acetylization may also be accomplished if hydrocellulose be heated in the presence of a small amount of sulphuric acid, with acetic anhydride to 60–70°, and even

1. C.R. 1869, **68**, 814. 2. Ber., 1879, **12**, 2059; 1881, **14**, 1290.
3. J.C.S., 1890, **57**, 1; 1895, **67**, 435, 477.
4. Ber., 1899, **32**, 2413; 1901, **34**, 1115.
5. D.R.P. 85329, 1894; 86368, 1895.
6. For example from viscose or from a copper-oxide ammonium solution.
7. D.R.P. 105347, 1898. 8. D.R.P. 139669, 1899. 9. D.R.P. 118538, 1899.

to as low as 30°. Indeed Franchimont [1] had already practiced acetylization with acetic anhydride and sulphuric acid, but only at elevated temperatures, and this gate rise to the formation of acetylated decomposition products of cellulose. Girard,[2] who had been the first to study hydrocellulose minutely, treated hydrocellulose with acetic anhydride at its boiling point. In this reaction also decomposition products are apparently only obtained.

Later Lederer [3] found that the formation of hydrocellulose and the acetylization may be performed in a single operation. He heated to 60–70°, cotton cellulose in glacial acetic acid which contained a little sulphuric acid until the fibers had disintegrated to a structureless powder. Acetic anhydride was then added, and the acetylization completed at a temperature below 70°. One month before this, Farbenfabriken vorm. Friedr. Bayer & Co., in Elberfeld,[4] had applied for a patent which differed from the one just described in so far that cellulose is treated directly with glacial acetic acid, acetic anhydride and sulphuric acid at room temperature. By this treatment the cellulose (cotton) loses its fibrous structure, being dissolved in the acetic anhydride to a syrupy mass. Without solution or apparent change of structure, cotton cellulose can be acetylized according to the directions of the Badische Anilin und Soda Fabrik in Ludwigshafen [5] if the acetylization is carried out in the presence of an indifferent organic solvent in which acetylcellulose is insoluble. The reaction is accelerated in this process if the cellulose employed be wet.

Acetylization by means of acetic anhydride in the presence of mineral acids has subsequently been somewhat modified. In place of sulphuric acid Landsberg [6] proposes phosphoric acid, while Sthamer [7] had previously shown that acetylization can be initiated by means of hydrochloric acid gas, which is conducted into glacial acetic acid or acetic anhydride. The substitution of sulphuric acid by sulphuric anhydride or other mineral acid anhydrides is said to offer advantages according to Miles.[8] These mineral acid processes have also been developed in another direction. It has been recognized that if the reaction be interrupted at a certain point, products of totally different solubilities are obtainable, namely, alcohol-soluble acetates. Such processes were described by the Farbenfabriken vorm. Friedr. Bayer

1. Ber., 1879, **12**, 1941; Rec. trav. Chim., 1899, **18**, 474.
2. Ann. Chim., 1883, (5), **24**, 360.
3. D.R.P. 163316, 1901.
4. D.R.P. 159524, 1901.
5. D.R.P. 184201, 1904; 184145, 1904. Hydrocellulose.
6. F.P. 316500, 1901. Hydrocellulose.
7. F.P. 308506, 1901. Hydrocellulose.
8. U.S.P. 733729, 1903.

& Co.[1] If the acetylating mixture reacts on the cellulose for too long a period, not only acetylation, but also decomposition takes place, and the acetates thus formed produce inelastic, brittle films. This difficulty is overcome, according to Knoll & Co.,[2] if, after completion of acetylation such salts as sodium acetate or sodium nitrate are added, which are capable of neutralizing mineral acids. This firm further describes[3] methods whereby this neutralization may be effected where volatile acids such as HCl or other halogen acids or nitric acid are employed, but in very small quantities and instead of a fixed acid as sulphuric.

Instead of mineral acids, Mork, Little and Walker[4] propose the use of aromatic sulphonic acids, especially phenol sulphonic acid, and the A.G. for Aniline Manufacture[5] and Knoll & Co.[6] employ halogenated fatty acids in various proportions. Knoll & Co.[7] also recommend sulphonic acids. In F.P. 319848, the employment of primary sulphates instead of acids is recommended. But not only acid sulphates may initiate acetylization, but also neutral sulphates. The Chemical Factory "Flora" employs dimethyl sulphate,[8] while Knoll & Co.[9] advocate the use of ferrous sulphate, diethylamine sulphate, ammonium sulphate, etc. The effect of all these additions to acetic anhydride may be differently interpreted. They may be considered as hydrolyzing, dehydrating or catalyzing. According to the present state of our knowledge, the following possibilities might perhaps be considered. The esterification of cellulose might be accomplished without any change of the molecule.[10] The addition of mineral acids would then be either for the purpose of catalyzing or dehydrating. But the cellulose might also first be hydrated, i.e., perhaps under diminution of the molecule, it might be converted into a substance analogous to mercerized cellulose or artificial silk, and then esterification could take place. The addition of either acids or salts to acetic anhydride would then accomplish this hydration, besides that, would act subsequently as contact substances or dehydrating agents. It would then be possible for cellulose to be hydrolized by these additions, and after being converted into substances

1. D.R.P. 153350, 1901, starting from hydrocellulose. D.R.P. 185837, 1902 starting from cellulose.
2. D.R.P. 196730, 1906; 201910, 1907.
3. German application K. 31345, 1906.
4. U.S.P. 709922, 1902.
5. D.R.P. 198482, 1905.
6. D.R.P. 203642, 1906.
7. D.R.P. 180666, 1905.
8. German application C. 12963, 1903.
9. German application 31268, 1906.
10. The conception of acetylcelluloses as combinations of absorption, analogous to the conception of nitrocelluloses is highly improbable, and need not be discussed here, because in sueh combinations of absorption, the cellulose molecule might be considered as completely unchanged.

of the character of hydrocellulose, esterification might take place. Finally hydration and hydrolysis may occur simultaneously.

As the patent literature above mentioned shows, the chemical reagents in a number of processes are the same, namely glacial acetic acid, acetic anhydride and sulphuric acid, while the sources of cellulose vary, being cellulose and hydrocellulose. Schwalbe [1] has shown that hydrocellulose and cellulose hydrate can be distinguished from each other by their power of reduction. In those processes in which cellulose is used as the starting material, sulphuric acid might act as an agent of hydration, of hydrolysis and of esterification, either by catalysis or by dehydration. But in those processes in which hydrocellulose is employed, the ester-forming effect of sulphuric acid can be due only to catalysis or dehydration. The mechanism of the reaction might be explained by a comparison of those products which are formed according to the patents of the Farbenfabriken vorm. Friedr. Bayer & Co., especially D.R.P. 159424, and with those which are obtained according to the patent of Lederer, especially D.R.P. 163316. In the Lederer processes, the starting material is either hydrocellulose or cellulose, which in the first step of the reaction is formed from cellulose by means of glacial acetic acid and sulphuric acid. If a comparison of the acetyl products of Lederer and of Bayer shows that the acetyl products or their saponification products are identical, then the conclusion is justified that in the reaction of sulphuric acid on cellulose, glacial acetic acid and acetic anhydride, the sulphuric acid acts not only as a catalyzing agent, but that the cellulose in the process of acetylation is converted into hydrocellulose. Ost [2] has already carried out such a comparison. He found that the physical and chemical properties of Bayer's and Lederer's acetyl celluloses are almost identical; that the combustion analysis, and the determination of the acetyl numbers give figures which agree with those of acetyl hydrocelluloses. He further observed that if the acetylation according to the directions of the Farbenfabriken vorm. Friedr. Bayer & Co., i.e., by the simultaneous action of glacial acetic acid, acetic anhydride and sulphuric acid on cellulose is prematurely interrupted, a product is obtained which is colored with fuchsine considerably stronger than the starting material. The observation of stronger coloration with basic dyestuffs has been regarded as a distinction between hydrocellulose and ordinary cellulose.

At the time of the publication of Ost, it was still doubtful whether

1. Ber., 1907, **40**, 1347.
2. In other words that the acetic acid ester of cellulose produced by means of sulphuric acid are derivatives of hydrocellulose. Zeit. ang. Chem., 1906, **19**, 993.

a distinction must be made between hydro- and hydrate celluloses. Ost was of the opinion that these substances might be identical and might have been produced from cellulose by simple absorption of water. But, as already mentioned above, I have demonstrated that hydro- and hydrate celluloses may be distinguished by their power of reduction. If, however, such a difference exists, then the identity of the acetyl celluloses of Bayer and of Lederer would again become doubtful. The figures obtained by combustion analysis and by a determination of the acetyl values are the same for hydrate- and hydrocelluloses. If the acetyl celluloses produced by Bayer are derivatives of hydrate celluloses, then they are not identical with the acetyl celluloses of Lederer, which are undoubtedly derivatives of true hydrocelluloses, possessing power of reduction.

Some time ago Ost and Westhoff [1] showed by combustion analysis that the ordinary hydrate celluloses, such as mercerized cellulose and viscose, do not contain more water than ordinary cellulose. They also showed what I had already ascertained some time before, that in distilling mercerized cellulose with toluene (or petroleum) no more water is given off than if ordinary cellulose is distilled with toluene (petroleum). If now, hydrate celluloses, contrary to the former theories, do not contain any more chemically combined water than ordinary cellulose, then Ost's analysis of acetyl products must again be considered as proving that the esters are derivatives of true hydrocellulose, because these hydrocelluloses contain chemically combined water. But it must also be considered that combustion analyses and the distillation with toluene or petroleum do not carry absolute conviction, if the presence of very small quantities of chemically combined water is to be determined in connection with a very large molecule of cellulose. The figures for cellulose, $C_6H_{10}O_5$ for example, and for a hydrocellulose or hydrate cellulose $(C_6H_{10}O_5)_{10} \cdot H_2O$ are already within the limit of experimental error in the combustion analysis. As a matter of fact, therefore, it cannot be decided by combustion analysis whether hydrate celluloses contain any chemically combined water, but it can only be shown that, as has been heretofore assumed, they do not contain as much water as corresponds to about the formula $(C_6H_{10}O_5)_2 \cdot H_2O$.

The analytical figures of Ost [2] for acetyl cellulose vary between 47.82 to 49.37 for carbon; 5.48–6.01 for hydrogen and 57.3–63.2% for acetic acid. According to Ost, the following figures are calculated:

For diacetyl cellulose, C, 48.76; H, 5.37; acetic acid, 48.8.

1. Chem. Ztg., 1909, **33**, 197; Zeit. ang. Chem., 1909, **22**, 1856.
2. L.c., page 996.

Diacetyl hydrocellulose C, 48.17; H, 5.80; acetic acid, 48.2.
Triacetyl cellulose, C, 49.88; H, 5.60; acetic acid, 62.5.
Triacetyl hydrocellulose, C, 49.46; H, 5.66; acetic acid, 61.8.

The figures actually found in ten analyses—if some of the substances which presumably contain diacetate are disregarded—agree with those of a triacetyl hydrocellulose. The combustion analysis, therefore, makes it really very probable that in the process of the Farbenfabriken vorm. Friedr. Bayer & Co., the cellulose is hydrolized prior to esterification. But since the substances under examination are not completely uniform, but must be considered as mixtures of di- and triacetates, the combustion analyses alone, as has already been shown by Ost, are not sufficient for the explanation of the process of acetylation.

It is therefore necessary to look for other characteristics of the acetyl celluloses. According to Ost, the strong coloration of hydrocellulose is such a distinctive characteristic. But it must be considered herewith that hydrate celluloses, for example mercerized cellulose, also possess a power of coloration which is different from that of ordinary cellulose. Therefore the different power of coloration of the substance which is separated by Ost at the start of acetylation, does not carry absolute conviction any more. But if we succeed in showing the presence of reducing substances, for example, hydrocellulose, in the saponification products of the acetyl cellulose of Bayer, then we have proven that at least a certain part of cellulose is converted into hydrocellulose by acetylation. If we further succeed in demonstrating that the quantities of hydrocellulose in the saponification products are approximately the same as in the saponification products of Lederer, then the identity of the reaction might be clearly demonstrated.

As we have shown above, the power of reduction of hydrocellulose as compared with that of cellulose and of hydrate celluloses, is a distinguishing characteristic. It is true that oxycelluloses also possess power of reduction, but such substances need not be considered in the process of acetylization, as they only occur in very small quantities in the form of impurities of the starting material. A formation of oxycellulose during the acetylization process is excluded The cotton cellulose is completely saturated with acetic anhydride and glacial acetic acid. As an agent of oxidation only, atmospheric oxygen, highly diluted with nitrogen is present, since in the experiments closed vessels were used, the space above the cotton being filled with acetic anhydride vapors, especially upon the application of heat. But if oxidation did occur, then not only cellulose, but

hydrocellulose, would be equally and presumably more intensely oxidized. If this should be the case, then the power of reducing the celluloses which are separated from the products of reaction of the hydrocellulose acetylization would be considerably greater than the power of reducing celluloses which are obtained from the products of reaction of the acetylization of cellulose. As is shown in the table below, this is not so. The formation of oxycellulose may therefore be considered as excluded.

I have undertaken to test the power of reduction of the products of saponification of a great number of acetyl celluloses produced according to some of the typical processes. In this first communication the results of the investigation of acetyl celluloses produced according to Lederer, Bayer, Mork and Knoll will be described. These determinations are based on an exact and smooth method of saponification of the acetyl celluloses. Ost [1] has found that a smooth saponification of the cellulose acetates takes place by means of strong sulphuric acid (one volume each concentrated acid and water). An acid saponification, however, is not applicable for the purpose of this investigation of the power of reduction, since it is well known that acids produce hydrocellulose from cellulose. With acid saponification, therefore, it is not excluded that hydrocellulose, which might be formed in the product of saponification, might have been formed during saponification. Besides acid saponification, alkali saponification must also be considered. The method which is usually employed, viz., saponification with hot alcoholic potash, was unavailable for several reasons; first, by the action of alkali on alcohol, reducing substances might be formed; further, it was feared that saponified ester might be oxidized by alkali. For Ost has shown [2] that by boiling with alcoholic potash, organic volatile acids are formed. The saponification by means of boiling aqueous solution of alkalis can also not be used, because as I have formerly shown [3] hydrocellulose loses considerably in power of reduction by boiling with alkali. The only method left, therefore, is saponification with cold alkalis, because cold alkalis, if they act at all, act only very slowly and gradually on hydrocellulose. Ost obtained somewhat too high acetyl figures when he saponified acetyl celluloses by means of cold potash solution containing 25% KOH, and allowed the saponification mixture to stand for eight days. I could show that such a long saponification time was not necessary, that, on the contrary, forty-eight to seventy-two hours is sufficient, and gives acetyl figures which sufficiently agree with those obtained by means of acid saponification. For

1. L.c. 2. Zeit. ang. Chem., 1906, **19**, 993. 3. Ibid., 1907, **20**, 2171.

the present investigation, it is not of any moment as to whether the acetyl figures closely agree or not, if they serve only for the purpose of calculating the amount of cellulose separated by saponification. A difference of the acetyl figures of 1–2% influences the cellulose value so little that the figures for the power of reduction to be calculated by means of them are not essentially modified.

If we therefore saponify acetyl celluloses by cold solutions of alkali and find that the saponification products possess reducing power, we may be sure that this reducing power is caused by the subsequent action of alkalis. Previously I have shown [1] that by alkalis, the power of reduction of cellulose is not changed at all, or not very materially. Cross and Bevan [2] have further shown that if the action of alkali on cellulose is continued for several months, products are obtained which do not react on an alkaline solution of copper. Similar observations were made by Vignon,[3] but to be absolutely sure, I allowed cellulose to stand for seventy-two hours in contact with a potash solution containing 25%, that is, for a period of time which corresponds to the duration of saponification. The cellulose employed for all the experiments was technically unspun cotton, which upon saponifying with 25% KOH, gave 14.1% hygroscopic moisture, after seventy-two hours, 3.2754 gm. of this wet cotton, equivalent to 2.8136 gm. dry, gave 0.0584 gm. copper. As this quantity of copper contains the so-called hydrate copper [4] a corresponding correction must be applied. If a sample of cotton which is employed for the determination of total copper is freed from its copper content by means of acetic acid instead of nitric acid, it then can be immersed in a hot Fehling's solution. If after complete saturation it is washed with boiling water and the copper extracted by means of nitric acid, we then obtain 0.0275 gm. copper, which is set down as 1.0 copper figure. If a fresh sample of cotton cellulose, treated with 25% KOH solution as above, is placed in cold Fehling's solution, the following figures are obtained, 2.9006 gm. cellulose wet, or 2.8136 gm. dry, gave 0.0271 copper = 1.1 copper figure. If we now subtract 1.05 as average value for hydrate copper from the total copper figure of 2.1, then we obtain 1.05 = 1.1 copper figure, while the starting material before the treatment with caustic potash gave a copper figure of 1.2. It is therefore certain that no increase in the power of reduction has taken place. The power of reduction of the cellulose separated from acetyl celluloses by saponification is, therefore, not due to the action of alkali in the process of saponification. As the figures given below in tabulated form show,

1. Ber., 1907, **40**, 1349.
2. Chem. Ztg., 1909, **33**, 368.
3. C.R., 1900, **130**, 738.
4. Ber., 1907, **40**, 1350.

the acetyl celluloses of Lederer and those of Bayer give values for the power of reduction, which with the Bayer acetyl celluloses vary within the limits of 5.1–6.3, while Lederer's vary within the limits 6.1–6.6. These values are found to agree very much more closely, if certain necessary corrections are applied.

As starting material for the experiments as above mentioned, an unspun, bleached cotton cellulose of the quality as used for nitration or acetylization was used. I have formerly shown [1] that, for example, absorbent cotton contains a small quantity of oxycellulose the formation of which is apparently due to the bleaching process, but that it is possible to completely prevent the formation of oxycellulose by the use of woven cotton material. The starting material for my acetylization experiments, therefore, possesses a certain power of reduction and gives a "copper figure" of 1.2. This value must be subtracted from the above-mentioned copper figures, of course, from those of the Bayer products as well as from those of Lederer. Another correction must be applied to those values. By the action of strong acids and alkalis and by certain concentrated salt solutions cellulose hydrates are formed. These absorb a certain amount of the alkaline copper solution which is used for the determination of the power of reduction. The thus formed [2] bluish-green, copper-alkali-cellulose combination is not decomposed by boiling water. If, therefore, a cellulose solution is boiled with an alkaline copper solution for the purpose of determining the power of reduction and after the completion of boiling is washed with boiling water to remove the excess of the copper solution from cellulose, precipitated copper, or cuprous oxide, then in case the tested cellulose contained hydrate cellulose, small quantities of copper are retained in the form of Normann's compound.[3] These amounts of copper must, therefore, be attributed to the action of hydrate—and not to hydrocelluloses. It is therefore necessary to bear in mind the presence of hydrate cellulose in the products of saponification. The conditions for the formation of hydrate celluloses are present during the process of acetylization. The concentrated sulphuric acid in the acetylizing mixture may possibly cause the formation of hydrate cellulose, but the latter may also be formed during saponification, because in the process of cold alkaline saponification the cellulose separated from the ester is in contact with a strong alkaline solution, and if it was not already hydrated, would be subjected to the process of mercerization or hydration. For the

1. Zeit. ang. Chem., 1907, **20**, 2168.
2. Chem. Ztg., 1906, **30**, 584; Zeit. ang. Chem., 1906, **20**, 456.
3. Ber., 1907, **40**, 1350.

purpose of the present investigation it is immaterial what the source of hydrate cellulose is, whether it was formed in the process of acetylation or subsequently in the process of saponification. It is only necessary to correct the increase or the copper "figures" due to its presence.

I have formerly shown [1] that the quantity of copper which is retained as Normann's copper compound by such hydrate celluloses as mercerized cotton and artificial silk, may be ascertained by placing the cellulose in an alkaline copper solution. The quantities of copper retained by hydrate celluloses vary, and depend on the conditions of concentration, of the duration of acetylation and saponification, and of the temperature. Higher values than 1.2 have not been found for the examined acetyl celluloses, but for mercerized cellulose and artificial silk I have obtained values up to 1.6 and higher. If we now subtract from the total copper figures the copper figures for the starting material and for the hydrate cellulose, values are obtained which vary between 3.8 and 4.4. Similar values are observed for the power of reduction of the typical hydrocellulose made according to the method of Girard with 3% sulphuric acid.[2] The power of reduction of saponified acetyl celluloses could also be influenced by the presence of reducing substance in the materials which are necessary for acetylation besides cotton cellulose. As such reagents, glacial acetic acid and acetic anhydride must be taken into consideration. These technical products might contain reducing substances. Indeed, it has been shown that in technical glacial acetic acid, formic acid is present.[3] The minute quantity is probably removed in a great measure by washing the produced acetate. But even in case formic acid could not be removed by washing, its presence would not influence the result, because upon saponification it would go into the alkaline liquid and would be removed by washing with hot water in the form of sodium formate. But even if this removal would not be complete, the influence found for the power of reduction would be insignificant. It is to be noted that in the process of D.R.P. 159524 (Bayer) and also in D.R.P. 163316 (Lederer), hydrolysis takes place and hydrocellulose is formed. If the celluloses which are separated from the acetates made according to these two processes possess the same power of reduction, then the error due to the presence of formic acid would be in both cases the same, because both processes employ approximately the same quantities of glacial acetic acid and acetic anhy-

1. Ber., 1907, **40**, 1350.
2. Schwalbe, Ber., 1907, **40**, 4524; Zeit. ang. Chem., 1907, **21**, 1184.
3. Ost. Chem. Ztg., 1908, **32**, 815.

dride. It is therefore unnecessary to purify the technical acids for acetation. Since, therefore, in spite of considering the power of reduction of the starting material and notwithstanding the presence of hydrocellulose, the values for the power of reduction for the products of saponification obtained from acetyl celluloses according to Bayer and to Lederer, agree with those for typical hydrocellulose, and are the same for the acetyl celluloses for the two processes. The conclusion is therefore justified that in the acetylation according to Bayer from cellulose, glacial acetic acid, acetic anhydride, and sulphuric acid, hydrocellulose is formed, and that, therefore, the processes of Lederer and of Bayer are identical, so far as their chemical mechanism is concerned.

The formation of hydrocellulose is induced by absorption of water. Since the reaction takes place in the presence of acetic anhydride, it might appear that there is no water present for hydrolysis. But sulphuric acid always contains a little water, and cotton cellulose itself always contains water, as Ost [1] has proven. Therefore hydrolysis in this anhydrous medium is not surprising. In the acetylation according to Lederer and Bayer which we have described above, sulphuric acid acts as a hydrolyzing and dehydrating agent, perhaps also as a catalytic agent. As mentioned in the introduction, instead of mineral acids, aromatic sulphonic acids have been employed. The application of these acids was probably caused by the idea that on account of the use of the strongly reactive sulphuric acid, the factors of temperature, quantity of acid, and time, exercise a great influence on the final result. The substitution of the sulphuric acid by a more weakly active acid, could, therefore, only be of advantage, because without anything further, it is not permissible to assume that these sulphonic acids are decomposed, and that this acetylizing action is to be explained by formation of free sulphuric acid. An investigation of the nature described in Mork's patent shows, however, that such a decomposition actually takes place. In the U.S.P. of Mork, Little and Walker the use of phenol sulphonic acid or naphthol sulphonic acid is proposed. According to the patent specification, free sulphuric acid is said to have very injurious effect. Therefore to exclude its presence as an impurity in the starting material or to prevent its formation during the process of acetylation, the example given in the specification directs the simultaneous use of phenol sulphonic acid and sodium sulphophenolate. The latter substance is added for the purpose of combining with free sulphuric acid, which is said not to be capable of existence in the presence of the salt. Among

1. Zeit. ang. Chem., 1906, **19**, 993.

the reacting materials used the acetic anhydride might contain sulphuric acid. Much greater might be the percentage of sulphuric acid in the technical phenolsulphonic acids. It is known how easily decomposable the technical phenolsulphonic acids are. In a recently published article Obermüller[1] writes about these acids:

"I have been prevented from producing these acids in solid form, because they are ever so much more easily decomposed in a free state, and very difficult to produce in a pure form."

Indeed, in ordinary mixture of the barium salts of the two phenolsulphonic acids is prepared, and their solution decomposed with a little less than the calculated amount of sulphuric acid, solutions of free phenolsulphonic acid are obtained, which at once give off the odor of phenol when evaporated on the water bath and contain free sulphuric acid. It is therefore impossible in the usual way to obtain this acid as a dry or solid body, but one must be satisfied to produce it as a moist, deliquescent, crystalline mass. Now, it is claimed that the presence of sodium phenolsulphonate prevents the existence of free sulphuric acid in the acetylation with acetic anhydride. The question is whether this decomposition between free sulphuric acid and the sodium salt proceeds so rapidly that in the acetylation proper, cellulose is in contact with a liquid free from sulphuric acid. The experiment indicates that the decomposition proceeds extraordinarily slow, for if a mixture of 35 parts acetic anhydride, 0.5 parts phenolsulphonic acid and 0.5 parts sodium phenolsulphonate are heated to 80°, according to directions taken from the patent specification, then after three to four hours, sulphuric acid can be plainly shown, and only after twelve to fifteen hours is the liquid free from the presence of uncombined sulphuric acid. The slow reaction is explained by the fact that sodium phenolsulphonate is difficultly soluble in acetic anhydride. The same is the case with the free sulphonic acid, while, as is well known, sulphuric acid is very easily soluble in acetic anhydride. Consequently during acetylization, the liquid contains free sulphuric acid. As is shown in Lederer's D.R.P. 163316, hydrocellulose is formed after one hour's heating with glacial acetic acid containing sulphuric acid. It is therefore highly probable that sulphuric acid, and not phenolsulphonic acid, causes acetylization.

But is it not at all impossible that pure phenolsulphonic acid might act as an esterifying agent, and the formation of hydrocelluloses and its esterification by sulphuric acid might only be a secondary reaction. This question might be settled by carrying out acetylation of cellulose with pure phenolsulphonic acid and acetic anhydride both free from

1. Ber., 1907, **40**, 3632.

sulphuric acid. Pure phenolsulphonic acid may be obtained if the liquid produced by conversion of the solution of barium phenolsulphonate with sulphuric acid is evaporated at 30–40° *in vacuo*, a faintly pink colored crystalline mass being obtained which is entirely free from sulphuric acid and does not possess the phenol odor. According to the directions of the patent specification, if cotton cellulose and pure phenolsulphonic acid or the sodium salt, and acetic anhydride are heated together for five to seven hours at 70–80°, cellulose is changed into a slimy, syrupy mass. By kneading the reaction mass with water, acetyl cellulose separates out, which is washed, dried and examined according to the method described in the experimental part of this publication. The cellulose thus separated from Mork's acetyl cellulose has a copper figure of 2.8. This figure is lower than that obtained with Lederer's and Bayer's products, but it must be borne in mind that the experiment was carried out with phenolsulphonic acid completely free from sulphuric acid, and therefore at the commencement much less sulphuric acid was present than when the directions of the patent specification are adhered to. At any rate, hydrolysis has taken place, which can only be due to the phenolsulphonic acid or to its decomposition products. If free phenolsulphonic acid is suspended in acetic anhydride and heated to 70–80°, a splitting off of sulphuric acid cannot be demonstrated, but this can be done in the presence of cotton cellulose. If an acetylization mixture prepared according to directions, employing, however, reagents free from sulphuric acid, is tested every hour by examining trial portions, then it is possible to determine the presence of sulphuric acid up to four hours. For these tests 3–4 cc. liquid were taken, diluted with water, heated to boiling, and to the boiling liquid barium chloride is added. *Turbity is observed at once and after standing for several hours, a precipitate is formed.* The splitting off of sulphuric acid is, therefore, proven. It might perhaps be claimed that the tested acetic anhydride did not contain free sulphuric acid, but free phenolsulphonic acid, which was then subsequently decomposed by diluting the acetic anhydride with water and boiling. If this supposition is correct, it would also be possible to observe the splitting off of sulphuric acid if acetic anhydride containing only free phenolsulphonic acid was diluted, which, however, is not the case. That this decomposition takes place might be further proved by acetylizing with phenolsulphonic acid free from sulphuric acid and barium phenolsulphonate. If the free phenolsulphonic acid acted as acetylizing agent, then it would be immaterial whether the sodium or barium salt is employed. The patent specification emphasizes that any salt of the sulphonic acid may be

used. But if we try to carry out an acetylation with the barium salt, we can show that, instead of five to seven hours, even twelve to fifteen hours are insufficient to bring the acetylation to completion, evidently because a part of the free sulphuric acid is transformed into insoluble barium salt, and this reaction—formation of an extremely insoluble product—proceeds more quickly than the formation of sodium sulphate, so that a correspondingly smaller quantity of sulphuric acid must, therefore, be considered an acetylization by means of split-off, free sulphuric acid. Besides the amount of split-off sulphuric acid, the free sulphuric acid which is present in technical phenolsulphonic acid in not inconsiderable quantities exercises its effect in the manufacture on a large scale.

In the introduction, acetylations are described in which no acids were employed, but only so-called neutral salts (Knoll & Co.),[1] Knoevenagel is the discoverer of this interesting method of acetylation,[2] and described the reaction in the presence of ferrous sulphate, ferric chloride, diethylamine sulphate, ammonium sulphate, etc. Since no acid is present, acetylation might proceed, under these circumstances, in an entirely different manner. According to the view of Knoll & Co., these neutral salts act only as catalyzing agents. It is, however, possible to prove in a manner analogous to that employed for the Bayer or Lederer products, that is, by examining the products of saponification of the acetates, that in acetylizing with neutral salts, hydrolysis actually takes place. For acetates which have been prepared with ferrous sulphate, and with dimethylamine sulphate, values for the power of reduction of 1.6 for ferrous sulphate and 1.7 for diethylamine sulphate were obtained after deducting all figures for correction. These values show, without doubt, that hydrolysis has taken place, because the products of saponification of these acetates possess powers of reduction. In the case of the ferrous sulphate process, the power of reduction of the products of saponification might be attributed to a simultaneous oxidation of the cellulose, and the ferrous to ferric salt. In case of the diethylamine sulphate process oxidation is excluded, but power of reduction is likewise observed. This might also be attributed to hydrolysis caused by the slight traces of free sulphuric acid contained in technical glacial acetic acid and acetic anhydride. But hydrolysis cannot be observed when these two bodies alone act on cellulose even if the temperature of

1. D.R.P. 203178, 1908.
2. Zeit. ang. Chem., 1908, **21**, 2401. Knoevengel described his views on the catalytic action of neutral salts not only in these patents of Knoll, but also in a paper which he read at the meeting of the Southwest German Chemists in Hiedelberg on August 3, 1908.

reaction be raised to 70° and the reaction continued for sixty hours. On the other hand when using absolutely chemically pure glacial acetic acid and acetic anhydride, acetylation can be accomplished by the addition of ferrous sulphate or ammonium sulphate. Hydrolysis, therefore, is caused by the neutral salts. If we consider the strong power of decomposition which cellulose exercises on neutral salts, it becomes clear that hydrolysis is caused by mineral acids which are split off temporarily from the neutral salt. It has been known for some time that certain metallic salts are decomposed by cotton cellulose. Runge[1] has described the decomposition of alum. It is therefore obvious that ferrous sulphate might be decomposed—a reaction which is surely accelerated by warming to 70° as directed. This split-off mineral acid causes hydrolysis. The decomposition of diethylamine sulphate is more easily understood if the dissociation of ammonium salts is borne in mind, which dissociation occurs more readily at elevated temperatures. The fact described in the patent specification is characteristic that the reaction can only be carried out with salts of the weaker bases, and not with those of potassium and sodium.[2]

1. Farbenchemie, Berlin, 1834.

2. *Experimental part.* The acetyl celluloses employed for this investigation were prepared exactly in accordance with D.R.P. 159524, Bayer; and 163316, Lederer. In order to be certain that the reaction would proceed uniformly, only small quantities of cellulose (20 gm.) were employed in each test. The acetylization mixture was worked up by kneading water into it. After separating the reaction mass by the frequent addition of water, it was washed with water until neutral. The precipitate was dried under access of air at ordinary temperature at 30–70° and then ground in a mill and partly sifted through a 100 mesh sieve. It is not absolutely necessary to have this fine division. The saponification proceeds sufficiently smooth even if the acetyl cellulose is in larger particles.

About 3–5 gm. of acetyl cellulose are employed for saponification, rubbed up in a mortar with about 50 cc. of aqueous 25% caustic potash and poured into an Erlenmeyer. After standing for about 48 hours, 500 cc. water are added and using helianthin as an indicator, the liquid is neutralized with concentrated sulphuric acid. It is now necessary to allow the liquid with the precipitate to stand quietly for several hours, so that the cellulose, part of which is only separated by neutralization, subsides in coarser flakes, which can be more easily filtered. After about three hours the liquid is carefully decanted from the precipitate, the latter washed with boiling water and filtered through filter-paper (Schleicher & Schüll, No. 597) using a Buchner funnel, with two layers of filter-paper. The washed precipitate is allowed to settle. The supernatant liquid is carefully decanted, the precipitate being then employed for the determination of the power of reduction. The figures obtained would correspond to the power of reduction of the hydrate cellulose. (Qualitatively, the increase in the power of reduction can be very easily demonstrated. The starting material—bleached cotton—is immersed in the dilute alkaline copper solution and left there for four to five hours. If the cotton is then washed with water a green-blue coloration—sign of mercerization—is noticed, but not a trace of reduction. If the cellulose separated from acetate is treated in the same way and for the same time, cuprous oxide is very plainly visible and, therefore, a reduction has taken place.) The collected filtrates are strongly acidulated with sulphuric acid and the distilled with steam. The distillate is titrated with normal caustic soda solution, using phenolphthalein as an

indicator. Control experiments employing acid saponification agents were carried on according to Ost.

The power of reduction is determined by means of boiling alkaline copper solution. The cellulose separated from the saponification mixture obtained by the use of caustic potash of 25%, is boiled for one-quarter of an hour with about 300 cc. of water and 100 cc. of Fehling's solution (50 cc. of copper sulphate solution and 50 cc. Rochelle salt solution). In order to carry out this determination the cellulose is first boiled with 300 cc. in the Gnehm stirring flask, and then the boiling copper solution is introduced into the boiling solution. When the liquid is again fully boiling, it is continued for one-quarter of an hour under stirring, and then the liquid is immediately filtered through a double filter in a Buchner funnel (Schleicher & Schüll filter paper No. 557). After the greater part of the liquid has run off, it is completely washed with boiling water until the filtrate is free from copper. The precipitate is then mixed with water and the copper dissolved out with about 10 cc. of nitric acid (5%). The boiling liquid is filtered, washed, and the filtrate concentrated by evaporation for electrolytic analysis. In order to faciltate the complete separation of copper 1–2 cc. sulphuric acid (1:10) is added.

In order to determine the small quantity of copper which is retained when hydrate celluloses are present, one proceeds as follows: A sample of the above-described washed saponification product is immersed in a cold alkaline copper solution containing 50 cc. of Rochelle salt solution and 50 cc. of copper solution, of the strength of the Fehling's solution, and 300 cc. of water. After standing for fifteen to thirty minutes, the liquid is filtered by suetion, washed with boiling water until the filtrate is free from copper, the precipitate is mixed with about 200 cc. of boiling water, 20 cc. of 0.5% acetic acid solution are added and the liquid is allowed to stand on the water bath for one-quarter hour. The blue-green copper alkali cellulose compound which has been produced by the action of the alkaline copper solution is decomposed by this very dilute acetic acid and the blue-green coloration completely disappears. Then it is filtered again and washed with boiling water. If the cellulose should still show the greenish or bluish coloration, the extraction with dilute acetic acid is repeated. The filtrate contains that amount of copper which has been retained by the absorption of the alkaline copper solution. The copper is determined electrolytically after proper concentration by evaporation and addition of a little nitric acid and sulphuric acid. The alkaline copper solution must not be allowed to react longer than about one hour, because otherwise the reduction already begins in the cold and the cellulose cannot be freed any more from copper by dilute acetic acid because the cuprous oxide adheres too firmly to the cellulose. It is also not permissible to allow the cellulose containing the copper alkali to stand too long after washing, because reduction might also set in. After complete removal of the copper acetate solution by washing, the power of reduction can be ascertained in the same sample by means of fresh boiling copper solution. Of course, both determinations may also be carried out with separate samples, but since all the values obtained agreed perfectly, it can be asserted that alkali copper and reduction copper may be determined in one sample. In the majority of the hydrate-copper figures given in the tables below the figures have been obtained in separate samples.

TABLE I

"COPPER FIGURE" OF THE STARTING MATERIAL (BLEACHED UNSPUN COTTON).

	Weight of Cellulose, air dry.	Percentage of Water.	Weight of Cellulose, absolutely dry.	Weight of Separated Copper.	Copper Figure.
1	1.7571	4.2	1.6837	—	—
2	3.0784	4.2	2.9491	0.0375	1.3
3	3.3558	5.3	3.1791	—	1.2
4	3.1455	5.3	2.9788	0.0363	1.2

TABLE II

ACETIC ACID DETERMINATIONS IN ACETYL CELLULOSE

Number of Experiment.	Quantity of Material.	Method of Saponification.	Duration of Saponification. Hours.	Quantity of Acetic Acid in Gramines.	Quantity of Acetic Acid in Percentage.	
Lederer 1*a*	4.7062	Alkaline	48	2.73	58.0	
" 1*b*	4.4800	"	36	2.56	58.0	
" 2*a*	4.3230	Acid	48	2.72	62.4	
" 2*b*	4.2532	Alkaline	36	2.64	62.0	
" 3*a*	3.8316	"	48	2.33	60.7	
" 3*b*	4.0011	"	48	2.52	62.9	62.3
" 3*c*	4.3680	Acid	60	2.77	63.3	
Bayer 1*a*	2.2970	"	60	1.42	61.9	
" 1*b*	4.2342	Alkaline	48	2.63	62.0	
" 1*c*	4.3950	"	36	2.63	60.0	60.8
" 1*d*	4.4600	"	36	2.69	60.2	
" 1*e*	4.1872	Acid	36	2.51	60.0	
" 2*a*	5.2156	Alkaline	48	3.09	59.2	
" 2*b*	5.5613	"	48	3.29	59.1	

TABLE III

THE DETERMINATION OF THE POWER OF REDUCTION OF THE PRODUCTS OF SAPONIFICATION OF ACETYL CELLULOSES

No.	Acetic Acid in Percentage.	Quantity of Acetyl Cellulose.	Quantities of Separated Cellulose.	Separated Copper.	Copper in Percentage.
Lederer 1*b*	58.0	4.4800	1.8816	0.1142	6.1
" 1*c*	58.0	4.1174	1.7493	0.1105	6.3
" 2*b*	62.0	4.2532	1.6162	0.1011	6.2
" 2*c*	62.0	4.2003	1.5961	0.1045	6.5
" 2*d*	62.0	4.3547	1.6548	0.1049	6.3
" 3*a*	62.3	3.8316	1.4445	0.0918	6.3
" 3*d*	62.3	4.1499	1.5645	0.1034	6.6
Bayer 1*b*	60.8	4.2342	1.6598	0.0853	5.1
" 1*c*	60.8	4.3950	1.7228	0.0935	5.4
" 1*d*	60.8	4.4600	1.6883	0.0989	5.8
" 2*a*	59.2	5.2156	2.1384	0.1343	6.3
" 2*b*	59.1	5.5613	2.3333	0.1371	5.9
" 2*c*	59.0	4.2257	1.7325	0.1001	5.8

TABLE IV

DETERMINATION OF COPPER RETAINED BY HYDRATE CELLULOSES; CORRECTED "COPPER FIGURES."

No.	Quantity of Separated Cellulose.	Quantity of Copper retained by Hydrate Cellulose.	Hydrate Copper in Percentage.	Copper Figure of Starting Material.	Corrected Copper Figures.
Lederer 3*a*	1.4445	0.0150	1.0	1.2	4.1
" 3*b*	1.5645	0.0164	1.0	1.2	4.4
Bayer 2*a*	2.1384	0.0187	0.9	1.2	4.2
" 2*b*	2.3333	0.0185	0.8	1.2	3.9
" 2*c*	1.7325	0.0142	0.8	1.2	3.8

Table V

POWER OF REDUCTION OF SAPONIFICATION PRODUCTS OF ACETYL CELLULOSES OF MORK, LITTLE AND WALKER (WITH PURE PHENOLSULPHONIC ACID).

Quantity of Acetyl Celluloses.	Percentage of Acetic Acid.	Quantity of Separated Cellulose.	Separated Copper.	Copper in Percentage.
6.0847	60	2.4339	0.1340	5.5 } average 5.4
3.7545	60	1.5018	0.0800	5.3 }
8.3320	60	3.4328	0.0480	5.4

Since the copper figure of the starting material is 1.2, we must deduct from 5.4(1.4+1.2); the corrected copper figure is therefore 2.8.

Table VI

DETERMINATION OF THE POWER OF REDUCTION OF THE SAPONIFICATION PRODUCTS OF ACETYL CELLULOSES ACCORDING TO KNOLL & CO.

	No.	Acetic Acid in Percentage.	Quantity of Acetyl Cellulose.	Quantity of Separated Cellulose.	Separated Copper.	Copper in Percentage.
Ferrous sulphate....	1	61	5.9081	2.3042	0.1200	5.2
	2*c*	61	4.1436	1.6160	0.0720	4.5
Diethylamine sulphate.....	1*a*	60	4.7531	1.9012	0.0908	4.7
	1*b*	60	4.1216	1.6487	0.0776	4.7
	2*a*	60	4.4178	1.7671	0.0771	4.4
Ammonium sulphate..	1*a*	61	5.3628	2.0915	0.0897	4.3

Table VII

DETERMINATION OF COPPER RETAINED BY HYDRATE CELLULOSES CORRECTED COPPER FIGURES. ACETYL CELLULOSES OF KNOLL & CO.

	No.	Quantity of Acetyl Celluloses.	Quantity of Separated Cellulose.	Quantity of Copper Retained by Hydrate Cellulose.	Hydrate Copper in Percentage.	Copper Figures of Starting Material.	Corrected Copper Figures.
Ferrous sulphate....	2*a*	4.1984	1.6374	0.0263	1.6	1.2	1.6
	2*b*	4.5100	1.7589	0.0313	1.8	1.2	
Diethylamine sulphate	2*b*	3.0971	1.2388	0.0181	1.5	1.2	1.7
Ammonium sulphate..	1*b*	5.5126	2.1499	0.0332	1.5	1.2	1.6

CHAPTER XX

VISCOSE AND THE CELLULOSE XANTHATES

Historical. Viscose[1] is the name given to cellulose sulphocarbonates by their discoverers, Charles F. Cross, Edward J. Bevan and Clayton Beadle, the history of which commences with the description of a patented process, issued to them in England, May 7, 1892.[2] They found that when soda-cellulose prepared by treating purified cotton with an excess of 15% solution of sodium hydroxide and squeezed until it retains about three times its weight of the alkaline solution, is placed in a vessel with carbon bisulphide equal to about 40% of the weight of the original cotton, a homogeneous liquid is obtained after stirring and digestion for about three hours, consisting of cellulose thiosulphocarbonate (thiocarbonate, xanthate). This product by spontaneous decomposition, by precipitating with dehydrating agents, by heating the solution and by other ways, forms a jelly-like coagulum

1. The name viscose is also applied to dextrane, or dextran, a gummy substance occurring in unripe beet root, and in the lactic fermentation.

2. E.P. 8700, 1892; U.S.P. 520770, 1894; D.R.P. 70999, 1893; F.P. 227034, 1893; Dan. P. Jan. 12, 1897; Belg. P. 103093, 1893; It. P. 33347, 1893; Aust.-Hun. P. Aug. 28, 1893, all taken out in the name of Cross, Bevan & Beadle. The original application was taken out in Great Britain, being No. 3592, dated Feb. 19, 1901. Abst. J.S.C.I., 1893, **12**, 1892. See also C. Cross, E.P. 4713, 1896; Aust. P. Feb. 9, 1895; July 15, 1895; Port. P. 2325, 1897; Russ. P. Apr. 24, 1896; 2606, Jan. 13, 1898; Hung. P. Jan. 9, 1896; Cross, Bevan & Beadle, E.P. 3592, 1901; F.P. 261540, 1896. Their original method consisted in treating the cellulose, preferably cotton, with 12–20% caustic soda to saturation. When the mass had become uniformly saturated, the excess of alkali was removed by squeezing or centrifugally, the resulting mass holding from two to four times the amount of alkali of the original weight of cellulose acted upon. The alkali cellulose mass was next broken up, placed in a closed chamber, either heated or under vacuum, and 10–40% carbon bisulphide (calculated on the cellulose), added preferably in spray, the alkali cellulose being meanwhile continually agitated. The action completes itself in from three to five hours, but may be prolonged with advantage when it is desired to produce a compound as free as possible from residual fiber.

The product obtained by means of this treatment is so viscous as to require the mechanical aid of crutching or paddling to bring it into homogeneous suspension in water. It will be noted that the cellulose xanthate was not purified from subsidiary and reacting products in this original process, although purification methods were subsequently described (U.S.P. 717355, 1902). At the time the original process was patented, the inventors had no other end in view but that of depositing the cellulose on textile fibers and fabrics in such a manner as to obtain various printing effects.

of regenerated cellulose. In the Journal of the Chemical Society, 1893, **63**, 837, the theoretical aspects of the interaction of alkali-cellulose are discussed, and in the Journal of the Society of Chemical Industry for the same year (1893, **12**, 498 [1]) are described some of the industrial developments opened up by "the recognition of this particular synthetic capacity of cellulose." The name "Viscose" was given to cellulose xanthates by its discoverers on account of the uncommon viscosity of the aqueous solutions, and the name "Viscoid" to the regenerated cellulose obtained from viscose, because in physical deportment it so strongly resembles the parent substances. Viscol, viscolith, viscine, and viscoloid, are terms not properly applied to this material. It appears that the only object the inventors had in view at the time of their discovery was to succeed in depositing cellulose on fabrics, threads, or woven pieces. The cellulose xanthates are intimately connected with nitrocellulose and may be considered as comprised within the subject "Nitrocellulose Industry," as the former are extensively used in the preparation of artificial fibers, in plastic aggregates, and other technical uses, where they are extensively associated with or compete against the cellulose nitrates, celluloid and the pyroxylin plastics. The history (brief in years only) of these cellulose derivatives, is essentially comprised in technical processes and discoveries in purifying the parent product, or extending the field of usefulness to various commercial industries, and will follow incidentally to a description of the refinements in manufacture and the extension of commercial possibilities. In conformity with previous sections of the work, the raw products used will be first taken up and discussed, the formation of viscose and allied compounds with their intermediate and subsidiary products described, followed by an enumeration of the technical uses to which these products have been put and future possibilities in expanding the art.

The industrial development of viscose combinations in some directions has not been as satisfactory or rapid as predicted. The com-

1. Also Bull. Soc. chim., 1893, **9**, 295; Sci. Am. Suppl., 1893, **36**, 14708. See also Cross, Bevan & Beadle, Ber., 1893, **26**, 1090; C. Beadle, Jour. Frank. Inst., 1894, **138**, 100; 1897, **143**, 1; C.N., 1897, **75**, 7486; R. Strehlenert, Chem. Ztg., 1901, **25**, 897; O. Witt, Papier Ztg., 1900, **25**, 2787; Bardy, Bull. d'enc., 1900, **5**, 321; Le Gen. civ., 1900, **37**, 382; S. Ferenczi, Z. ang. Chem., 1899, **14**, 11; Mon. Text. Ind., 1899, **14**, 93; Papier Z., 1899, **24**, 31; Am. Apoth. Ztg., 1899, **20**, 93; M. Prud'homme, Monit. teint., 1902, **46**, 213; L. Lefevre, Rev. gen. des Mat. color., 1897, 133; 1898, 249; Nature, 1898, **26**, 146; Lehne's Farb. Ztg., 1898, **9**, 190; Leipz, Farb. u. Must. Ztg., 1899, **48**, 39; B. Margosches, Zeit. f. d. ges. Text. Ind., 1900–1901, **4**, 210, 227, 243, 259, 275, 290, 307; 1903–1904, **7**, 601, 615, 643, 657, 671, 685, 699, 713; 1904–1905, **8**, 57, 71, 85, 337, 519, 533, 561, 575, 589, 617; 1905–1906, **9**, 61, 75, 89, 173; R. Strehlenert, abst. Chem. Ztg., 1900, **24**, 1109; H. Rousset, Rev. gén. sci. pur. appl., 1910, **20**, 831; F. Beltzer, Rev. gén. chim., 1910, **13**, 72.

plications resultant upon the introduction of alkali residues and sulphur groups into the colloidal aggregate, have developed factors which require much methodical and painstaking, experimental research for their satisfactory technological utilization. The spontaneous decomposition of viscose solutions; their gradual deterioration; the absence of a general theory of the colloidal state, are factors which have necessitated the development of the art primarily on a purely empirical basis.

Alkali-Cellulose. John Mercer first observed in 1844 that by filtering strong caustic soda solution through cotton, the latter swelled up, shrunk greatly and became more transparent. In order to examine more closely into the phenomenon, he measured the density of the lye before and after it had passed through the cotton, and found that it decreased from 1.30 to 1.25. As the result of his investigations, it was found that (*a*) sulphuric acid and zinc chloride under certain conditions react similarly; (*b*) warming the alkali solution retards the action, while cooling the solution accelerates it; (*c*) best results are obtained when caustic soda solution of 20–30° Bé. is used, the firmness of the threads increasing in the ratio of 13–22; (*d*) the action of the alkali on the cotton is increased with the concentration of the former. The first patent for the treatment of cellulose with alkali was taken out by Mercer in 1850.[1]

W. Crum[2] next investigated the changes in the minute structure of the cotton cell induced by the treatment with alkali, and together with the work of J. Gladstone[3] it was established that with solutions of sodium hydroxide of strengths exceeding 10% NaOH, at ordinary temperatures when brought in contact with cellulose, induced the changes mentioned above as the result of a definite reaction between the cellulose and hydroxide, in the ratio $C_{12}H_{20}O_{10} \cdot 2NaOH$, accompanied by hydration. This compound of cellulose and alkali is not firmly fixed, as is seen by the fact that decomposition results even upon washing with cold water, the alkali remaining unchanged, and the cellulose changing to the hydrated form $C_{12}H_{20}O_{10} \cdot H_2O$. Upon treatment with alcohol instead of water, but one-half of the alkali is liberated.

1. E.P. 13296, 1850. See also Ding. Poly., 1851, **122**, 318, and Polytechnische Zeitung, published by Leuchs & Co., Jan. 28, 1847, for German claim to priority of discovery of action of alkali on cellulose. In England Mercer's patent was followed by E.P. 2966, 1867, J. Sachs; 5713, 1881, C. Lightoller and J. Longshaw; 1816, 1882, E. Fremery and V. Urbain; 3103, 1883, W. Lukaes and the celebrated patents of C. Depoully, 28696, 1883; 8642, 1884; 15140, 1885; for the production of crimped and crepe effects, by mercerizing cellulose.

2. J.C.S., 1863, **16**, 404. He showed that the changes in the microscopic structure of the cotton cell under the action of the alkali is analogous to the natural process of ripening.

3. J.C.S., 1853, **5**, 17; J.pr. Chem., 1852, **56**, 247.

E. Thiele [1] corroborated the composition of alkali-cellulose as stated above, and showed that in the interaction of the latter with carbon bisulphide, whereby viscose is formed, the alkali-cellulose seems to play the rôle of an alkali alcoholate. More recently W. Vieweg [2] and Wiscelhaus and Vieweg [3] have investigated the chemical nature of alkali-cellulose, and find that at the concentration most suitable for mercerization the alkali and cellulose combine in molecular proportions, cellulose being taken on a C_6 molecule.[4] J. Hübner [5] with F. Telhscher,[6] also J. Lester [7] who have studied the action of caustic soda on cotton, question the existence of a definite cellulose-alkali compound.

Thiocarbonates and Xanthates. As carbon dioxide may be regarded as the anhydride of carbonic acid, and carbonates may be formed by the interaction of an alkali upon the anhydride, for example:

$$\underset{\text{Carbon dioxide}}{CO_2} + \underset{\text{Sodium hydroxide}}{2NaOH} = \underset{\text{Sodium carbonate}}{Na_2CO_3} + \underset{\text{Water}}{H_2O}$$

so also carbon bisulphide may be regarded as the anhydride of trithiocarbonic acid, according to the following equation:

$$\underset{\text{Carbon bisulphide}}{3CS_2} + \underset{\text{Sodium hydroxide}}{6NaOH} = \underset{\text{Sodium trithiocarbonate}}{2Na_2CS_3} + \underset{\text{Sodium carbonate}}{Na_2CO_3} + H_2O$$

$$\underset{\text{Carbon bisulphide}}{CS_2} + \underset{\text{Sodium hydrosulphide}}{2NaSH} = \underset{\text{Sodium trithiocarbonate}}{Na_2CS_3} + \underset{\text{Hydrogen sulphide}}{H_2S}.$$

in which relationship between carbonates and trithiocarbonates is apparent. The thiocarbonates or sulphocarbonates are readily decom-

1. Chem. Ztg., 1901, **25**, 610; 1904, **28**, 715; Zeit. Farb. u. Text. Chem., 1902, **1**, 73. See also Thiele, U.S.P. 710819, 1902; 750502, 1904; E.P. 8083, 1902; D.R.P. 133427, 134312, 157157, 1901; 148889, 1902; 154507, 1904; Belg. P. 162701, 1902; 171980, 1903; F.P. 320446, 1902; E. Boesch, U.S.P. 708456, 708457, 1902; Soc. générale de soie artificielle par le procédé Viscose, Aust. P. 21182, 1905.

2. Ber., 1908, **41**, 3269; Papier Ztg., 1907, **32**, 130, 174; Chem. Ztg., 1907, **31**, 5; W. Papierf., 1907, (1) **38**, 1890. See also Vieweg, abst. J.S.C.I., 1908, **27**, 418; J. Briggs, "Adsorption of Sodium Hydroxide by Cellulose Hydrates," Chem. Zeit., 1910, **34**, 455.

3. Ber., 1907, **40**, 441. See also O. Miller, Ber., 1908, **41**, 4297; Jour. Russ. Phys. Chem. Soc. in Chem. Ztg., 1905, **29**, 491. C. Cross (D.R.P. 92590), who has prepared viscose from hydrocellulose, finds that it produces a less satisfactory material, although but half the quantity of caustic soda or carbon bisulphide is used.

4. W. Herbig, Zeit. Text. Ind., 1900–1901, **4**, 785 ; Baumann, Ber., 1886, **19**, 3218; C. Cross, C.N., 1888, **57**, 39; L. Vignon, Chem. Ztg., 1900, **24**, 999.

5. J.S.C.I., 1909, **28**, 228.

6. J.S.C.I., 1909, **28**, 641.

7. J.S.C.I., 1909, **28**, 230.

posable bodies. Theoretically one, two or three oxygen atoms in carbonic acid (H_2CO_3) may be replaced by sulphur, forming mono-, di- and tri-thiocarbonates of the general formula H_2CO_2S, H_2COS_2, H_2CS_3.[1] The mono-ethyl ester of $\alpha\beta$-dithiocarbonic acid ($C_2H_5O \cdot CS \cdot SH$) is xanthic or xanthogenic acid.

This body is not stable in the free state, and is known only in its salts and esters. Potassium xanthate may be readily formed by dissolving potassium hydroxide in alcohol and adding carbon bisulphide to neutralization. On cooling the solution potassium xanthate separates out in colorless, silky needles, which become yellow on exposure to moist air, carbon bisulphide being evolved. When the potassium salt in aqueous solution is treated with dilute sulphuric or hydrochloric acids at 0°, xanthic acid separates as a heavy, colorless oil, which immediately begins to decompose with liberation of carbon bisulphide, and alcohol. Xanthic acid decomposes carbonates and forms a series of salts, which possess very characteristic colors, such as, for instance, the copper salt, which is intensely yellow, from which fact the acid received its name "xanthic."[2]

Cellulose Xanthate. As previously stated, Cross, Bevan, and Beadle were the first to investigate the interaction of alkali-cellulose and carbon bisulphide in the formation of cellulose thiocarbonates, and laid down the conditions most favorable to thiocarbonate formation.[3] When any form of cellulose is treated with a concentrated solution of an alkaline hydroxide, and the alkali-cellulose thus formed exposed to the vapor of carbon bisulphide, action ensues, the mass swells up, becomes yellowish, and on treatment with water, passes entirely into solution or distention.

1. For nomenclature of thiocarbonic acids see Bernthsen, Ann., 1882, **211**, 85; K. Hofmann and F. Höchtlen, Ber., 1903, **36**, 1146.

2. Zeise, Schw. J., 36, p. 1; 43, 160; Hlasiwetz, Ann., 1862, **122**, 87; Sace, Ann., 1844, **51**, 345. M. Ragg (Chem. Ztg., 1910, **34**, 82) has shown that the yellow precipitate which alkali xanthogenate produces in a copper salt solution is cuprous xanthogenate, and the free xanthogenate acid radicals unite to form *dixanthogen*, $C_2H_5OCSSSCSOC_2H_5$. At the beginning of the reaction, no cuprous xanthogenate is formed, as is given in most texts, but copper thiocarbonate, copper mercaptide and similar compounds. The thiocarbonic acids are formed by the gradual decomposition of the aqueous xanthogenate solutions by the alkali which is always used in excess. In the preparation of xanthogenic acid from carbon bisulphide, an alkali hydroxide and ethyl alcohol, the water that is formed in the reaction sets up a reversible reaction, decomposing the acid to such an extent, about 25%, that it is desirable to exclude the water altogether. This may be done by preparing it directly from alkali ethylate and carbon bisulphide. The copper xanthogenate prepared in this manner does not give the usual brown color, but a pure yellow, free from the usual decomposition products.

3. J.C.S., 1893, **63**, 837; Ber., 1893, **26**, 1090, 2524; J.S.C.I., 1893, **12**, 498; Sci. Am. Suppl., 1893, **36**, 14708; Beadle, Jour. Frank. Inst., 1893, **138**, 100; Dingl. Poly., 1894, **294**, 210; R. Strehlenert and Westergren, Chem. Ztg., 1901, **25**, 1100; J. Westergren, Teknish, Tidskrift, 1901.

The action rapidly proceeds when the reagents are brought together in the ratio

$$C_{12}H_{20}O_{10}:2Na_2O:2CS_2:30-40\ H_2O.$$

The reaction being represented thus:

$$XONa + CS_2 = SC\begin{matrix}OX\\SNa.\end{matrix}$$

The crude solution obtained by dissolving the reacting mass in water and containing yellow by-products (mainly trithiocarbonate), may be purified by precipitating out the cellulose derivative with alcohol or saturated brine. The purified product is not cellulose xanthate, analytical figures pointing to a combination with alkali, and is more properly described therefore as the sodium salt of alkali cellulose-xanthic acid. Solutions of this compound yield bright yellow precipitates with mercury and zinc salts and orange yellow with the salts of lead. The purified compound, however, in the presence of water, gradually reverts to cellulose, and upon the utilization of this fact has been built up the industrial uses for viscose (alkali cellulose xanthate).

Viscose solutions are precipitated with iodine, the precipitate being a thio-derivative which can readily be dissolved with formation of the original compound. This reaction, which may be expressed as follows, yields fairly constant quantitative results:[1]

$$CS\begin{matrix}OX\\SNa\end{matrix} + \begin{matrix}XO\\NaS\end{matrix}CS + I_2 = 2NaI + CS\begin{matrix}OX & XO\\S & S\end{matrix}CS.$$

In a later investigation published in 1901 [2] Cross, Bevan and Beadle have studied the progressive reversion which the cellulose-xanthate undergoes on keeping, and find that when the maximum degree of reaction has been obtained, by using excess of carbon bisulphide for a long time, there is evidence of the production of the compound

$$Na \cdot SCS \cdot O \cdot C_6H_9O_4,$$

termed the C_6 xanthogenate. This is not precipitated by salt, even after acidification with acetic acid. After twenty-four hours at the out-

1. The ratio is $I_2:S_2$, the latter representing one-half the total sulphur of the xanthate. The ratio obtained by Cross, Bevan and Beadle is in excess of this by exactly one-half, that is, $3I_2:4S_2$, the latter representing the total sulphur of the cellulose xanthate. It would appear therefore that the sodium atoms in the alkali-cellulose also react, oxygen being fixed.

2. Ber., 1901, **34**, 1513. See also Lindemann and Matten, Bull. Acad. Roy. Belg., (3) **23**, 827; Gardner, Muster Z., 1896, **45**, 507.

side, it reverts to the C_{12} xanthogenate, which forms the basis of the ordinary industrial viscose. The C_{12} xanthogenate is soluble in water after acidification and precipitation with brine. If no excess of caustic alkali be present, the solution sets to a solid mass after six to ten days and the product is then found to have the composition of a C_{24} xanthogenate. This compound is insoluble in water, but is readily soluble in caustic alkali and can be separated from its alkaline solutions in the pure state by acidification and washing. On further keeping, the C_{24} xanthogenate gradually reverts to a cellulose hydrate. It is pointed out that none of these changes take place suddenly, but that intermediate products and mixtures may be encountered. The remarkable influences of excess of caustic alkali on the solubility and viscosity of the xanthogenate preparations at all stages of their existence, indicates the participation of the second reactive hydroxyl of the alkali-cellulose in the production of soluble derivatives.

Maturing or Aging the Viscose is a partial transformation of the cellulose xanthate, which is necessary for the industrial utilization of the cellulose (viscoid). After the cellulose (pulp) has been cut up in a rasping machine and placed in a rotationg drum with the soda and agitated until apparently a homogeneous product results, the caustic soda and cellulose is left a further period of twenty-four to forty-eight hours for the alkali to uniformly diffuse through the mass and thus produce the maximum amount of water-soluble product. After the carbon bisulphide has been added and the mixture agitated, a second maturing or ageing process is carried out, this time in order to obtain a desired fluidity, and reach a state where it is instantly and completely coagulated by the action of a salt solution. The product is then carefully filtered from any unacted upon wood or cotton filaments, and placed in receivers, where the material is preferably kept at a temperature of 0–2° that the minimum change may take place until it can be used.

According to one process[1] the viscose is treated in a vacuum-jacketed kettle provided with stirring arms, and so arranged that hot or refrigerated air may enter the jacket. The maturing process can be effected in this apparatus, according to the designers, best at a temperature of 60° in thirty to forty minutes, and under the vacuum, the

1. Soc. France de la Viscose, F.P. 374123, 1906. According to their D.R.P. 223736, 1907, in the enriching and maturing of viscose solutions, the evaporation of the H_2O in the viscous solutions is effected *in vacuo* with a suitable heating, as gentle as possible, the distillation being discontinued after sufficient concentration, whereupon, after cutting off the evaporator from the air pump, the mass is maintained under decreased pressure in order to effect complete maturing, and is finally allowed to cool under that pressure. In this manner viscous solutions may be enriched to 12–15% cellulose.

water in the viscose boils and is rapidly removed, the volatile sulphur compounds present being expelled with the water vapor. The solution is thus simultaneously concentrated and purified. When maturing is complete, the contents of the vessel are rapidly cooled by the circulation of cold water in the jacket, thus stopping the process at any desired point.[1] R. Haller[2] claims to increase the stability of viscose by the use of sodium amalgam; but does not state the percentage of sodium to mercury in the amalgam which produces best results.

Precipitating or Fixing the Viscose does not, as has been stated in literature, mean the change from viscose to cellulose (viscoid)[3] The free sodium hydroxide must be "fixed" or neutralized, or the formed filaments will reunite after emerging from the spinnerets. Broadly speaking, the manufacture of filaments and threads of viscose may be characterized as taking place in a two-fold process, viz., the

1. As C. Ernst has pointed out (U.S.P. 863793, 1907), it is well known that if the viscose formed by dissolving the cellulose xanthate in a suitable solvent be allowed to stand or "age" for a sufficient length of time it will of itself change or coagulate, it will be apparent that the function of the "aging" process is to allow the viscose to approach but not quite reach that critical point at which it of itself coagulates, so that all that is needed to transform it into a filament is to spin it into a weak neutralizing bath. But on account of the fact that it is impossible to obtain absolutely uniform cellulose xanthate by the xanthizing process, the result is that during the "aging" process certain portions or parts of the viscose will "age" too much, and particles will frequently coagulate and change into dark-colored compounds, which greatly interfere with the spinning by clogging the minute apertures in the spinneret and therefore materially depreciate the quality of the threads or filaments produced. This coagulating of parts of the viscose appears to be due to the further action of carbon bisulphide upon the cellulose during the aging process. Moreover during the time required for the aging, the discoloring impurities in the viscose constantly increase, on account of the formation of sodium thiocarbonates and sulphides.

The object is, first to produce a viscose which does not require to be aged, but will coagulate immediately upon its injection into a weak acid bath, although the viscose be fresh, and to preserve the viscose, and second to so check the action of the carbon bisulphide as to enable it to be stored until it is needed for spinning, without producing the undesirable results above stated. The patentee accomplishes the first of these results by dissolving a suitable quantity of a neutral salt in the solvent for the cellulose xanthate, before the cellulose xanthate is added. The salts of sodium particularly adapted to this purpose are sodium carbonate, sodium sulphite, sodium silicate or similar salts, since they impart to the viscose the property of coagulating immediately when ejected into a weak neutralizing bath. The process of the Vereinigte Kunstseide Fabr. Akt-Ges., F.P. 317094, 1901; 323473, 323474, 323475, 1902; D.R.P. 125309, 1900; 155745, 183623, 1902; Belg. P. 164909, 1902; E.P. 17501, 1902, is practically the same, KOH being substituted for NaOH.

2. Zeit. Farb. Text.-Ind., 1904, **3**, 81. See also First Austrian Soda Works, D.R.P. 115856, 1899.

3. Freshly formed viscose would be coagulated and transformed into cellulose by ejecting it through a spinneret into a strong acid bath, but a thread or filament of the same could not be formed commercially, because the cellulose resulting from such treatment or process is very weak and possesses little or no elasticity. To spin a strong elastic thread the viscose must be ejected into a weak neutralizing bath, or in other words it is necessary to employ or produce a viscose which will coagulate immediately into a filament when it is ejected into a weak neutralizing bath.

viscose immediately upon its discharge from the spinneret is primarily "set" with sufficient firmness to undergo the spinning operation, and thereafter at a later stage the complete reversion of the viscose is effected. The so-called "setting" is partly a dehydrating action and partly an elimination of the alkaline constituent of the viscose. The great desideratum is to effect this primary double action rapidly to such an extent that the filaments shall become immediately firm enough to permit proper manipulation by the spinning apparatus. Various dehydrating agents have been employed, among the most advantageous of which is alcohol, and acids have been used in conjunction with alcohol as a setting-bath. It has been found, however, that when a weak acid is used the setting process does not proceed with sufficient rapidity to permit continuous spinning at the most desirable rate of speed, and, on the other hand, if a strong acid is employed to expedite the setting, the ultimate product is weakened.

Ammonium and magnesium sulphates, sodium phosphate and other salts, have been suggested as coagulating media, as well as glycerol, methyl, ethyl and amyl alcohols. M. Müller [1] proposes to substitute the usual ammonium sulphate or alcoholic precipitants by a bath consisting of 40 k. sulphuric acid 66° Bé. and 60 l. water, claiming that highly lustrous threads are thereby produced, the acid being much less expensive than ammonium salts.

The use of certain salts of organic bases, as the hydrochlorides of aniline, toluidine, xylidine, pyridine, benzidine and naphthylamine have been advocated,[2] the advantages claimed being that they are more readily removed from the precipitated cellulose by washing and

1. U.S.P. 836452, 1906; E.P. 10094, 1906; Papier Ztg., 1903, 28, 1751. According to Pinel Frères, F.P. 400577, 1908, an acid solution containing a difficultly crystallizable organic substance is an efficient coagulate, the following bath being recommended: glucose 30 gm., sulphuric acid 66° Bé. 15 gm., water 55 gm. Glycerol and acetic acid is recommended in F.P. 394586, 1908, Soc. franc. de la Viscose. It has been found, however, that the use of an acid bath tends to weaken the product whenever the filaments while still moist with the acid solution are exposed to the air for any considerable length of time, the weakening effect being more and more marked in accordance with the strength of the acid. C. Waite (U.S.P. 798027, 1905), has found that the removal of the alkali may be accomplished with sufficient rapidity by the use of a saturated aqueous solution of sodium bicarbonate or ammonium carbonate, or bicarbonate, together with ammonium sulphate. It is claimed that the free or surplus caustic alkali of the viscose is rapidly removed to the desired extent by the unsatisfied carbonic acid of the bicarbonate, the action of the ammonium sulphate being to coagulate the viscose.

The filaments which have been set by a solution of the above-described character, and spun in the usual manner are then reverted, preferably, by means of a solution of ammonium sulphate. Thereafter the usual washing and drying processes are employed.

2. S. Pissarew (Pissarry, Pcesarer), E.P. 16583, 1905; F.P. 357056, 1905; Belg. P. 186556, 1905; D.R.P. Anm. 15330, Oct. 8, 1903; F. & A. Lehner (U.S.P. 724020, 1903).

can be dyed during the manufacture into threads.[1] After treatment with these bases, the filaments are bleached, aged and otherwise treated as usual. The proportion of coagulating agents used are varied according to the fineness of filament to be produced and the particular conditions of the viscose under treatment.

Occasionally the use of ammonium chloride or ammonium sulphide causes the deposition of free sulphur upon the filaments, while with sulphuric acid as a fixative, the odor of hydrogen sulphide is often quite offensive. By the employment of sodium acid sulphite as the setting solution as described by C. Waite [2] these drawbacks are obviated. For the purpose of hardening the filaments and rendering them less liable to injury by abrasion during the subsequent finishing processes, it is advantageous to add a saline solution to the acid sulphite bath. Best results are claimed to be obtained by preparing the bath of saturated aqueous solution of sodium acid sulphite containing 11.5–12% of available sulphurous acid, and to this is added 10% of its weight of a saturated aqueous solution of sodium chloride.

1. Laboratory dyeing receipts are given for the production of aniline black on the fiber, the solution before spinning being treated with 0.00001% sodium vanadate. An automatic machine for fixing viscose filaments has been patented (F.P. 340812, 1904; E.P. 5730, 1904; abst. J.S.C.I., 1904, **23**, 821) by the Soc. franc. de la Viscose, in which the skeins of threads are supported on a pair of rollers, mounted in a vertical plane, in a vat. An acid sprinkler is supported over the upper roller, which is fixed in position. The lower roller can be raised or lowered by means of a pump, to permit the skeins being put in position or removed. Each of the rollers can be rotated by belts from the same shaft, which is fitted with an arrangement of cams, whereby each roller may be caused to perform a portion of a revolution alternately, thus constantly altering the position of the skeins on the rollers and insuring regular "fixation." To make the viscose more flexible (Courtauld & Wilson, E.P. 21405, 1907; U.S.P. 970589, 1910) glucose may be added to the precipitating bath. According to F. Todtenhaupt (Chem. Ztg., 1909, **33**, 1149) in making viscose from long-fibered materials, such as cotton, by the usual method of shaking the alkali cellulose with the carbon bisulphide, there is a great tendency for the fibers to pack together into balls which are not easily attacked by the carbon bisulphide. By using an indifferent solvent, such as benzin, ligroin, carbon tetrachloride, etc., this packing together is obviated and the alkali cellulose and carbon bisulphide come into intimate contact. With most forms of cellulose, stirring is not necessary when such a solvent is used. The solvent is separated from the viscose by centrifuging or filter-pressing and used again.

2. U.S.P. 759332, 1904; 816404, 1906; 849823, 1907. This process is said to be particularly valuable in connection with the manufacture of that form of artificial silk where a number of very fine viscose filaments are twisted into a composite strand, for the steaming eliminates all traces of caustic soda, the presence of which, even in small amounts, tends to redissolve the surface of the individual filaments, which are liable then to agglomerate into one coarse thread. The thorough steaming also removes any residual sulphur, which, depositing on the surface of the filaments, would dull their luster. The reactions occurring in the above method may be described as follows: The viscose compound is decomposed by heat into cellulose (viscoid), the sulphur contained therein is transformed into sodium thiosulphate (so-called hyposulphite), and the sodium hydroxide resulting from the decomposition of the cellulose sodium xanthate is neutralized by the sulphurous acid—whether this be used alone or contained in the acid sulphite salt. After steaming it is only necessary to wash the filaments and dry them.

The setting bath is preferably heated to about 60° and after treatment, the threads are subjected to the action of steam in the presence of the residual sulphurous acid, the steaming process being continued from one to two hours, depending on the thickness of the filaments, which are placed under tension during steaming to preserve their luster. In another [1] process the spinning-bath comprises a dehydrating reagent which is otherwise inert toward the viscose, the preferred ingredient being wood alcohol. With this is combined an organic acid and a salt of an organic acid in solution in such acid, the preferred reagents being acetic acid and sodium acetate. As a working formula for a bath thus constituted it is stated that with ordinary commercial wood alcohol about 6% of acetic acid should be added and the mixture substantially saturated with sodium acetate. Glacial acetic acid is preferably employed in order to minimize the incidental addition of water. The viscose is discharged into this bath in the usual manner through the spinneret, and the spun filaments are wound immediately after their emergence from the setting-bath. The complete reversion of the viscose is then effected, preferably, by immersion in a bath containing an inert dehydrating reagent and an organic acid alone, as wood alcohol and glacial acetic acid in the proportions above stated for those ingredients. The reverted filament is then washed and dried.

1. C. Waite, U.S.P. 792888, 1905. Patent should have been issued to S. Pettit. As "coagulating" or "setting" in this connection, has to do entirely with neutralization, it is apparent that the smaller amount of free caustic soda in the viscose solution, the quicker will the filament set or coagulate upon entering the precipitating bath. It is difficult, however, to properly dissolve the cellulose xanthate in a solution of caustic soda of much weaker strength than 5%. However, it has been found by Waite (U.S.P. 896715, 1908) that after the sodium cellulose xanthate or cellulose xanthate has been once dissolved in a caustic solution it will remain in solution or distention, even though a comparatively large amount of the alkaline solvent be neutralized. In other words, although a suitable amount of caustic soda is necessary to properly dissolve and first form a solution of the xanthate of cellulose which will spin well, the xanthate, when once dissolved, will remain, without coagulation, in a state of solution or distention in a medium which contains a considerably less amount of caustic soda than was originally required to dissolve it. Upon this principle is based a method of making a viscose which has the advantage of being a perfect solution attained by the use of a solvent having a comparatively great alkalinity but in which the alkali will not prevent a rapid coagulation of the viscose in the setting, or neutralizing or coagulating solution.

In carrying out this invention, Waite dissolves the sodium cellulose xanthate in a caustic soda solution (as for instance a 5% solution, or stronger) and after thoroughly mixing obtain a solution or distention of the cellulose xanthate. An acid, or an acid salt, is then added to the solution to partly neutralize the caustic soda. When so treated the cellulose sodium xanthate will remain in a clear solution or uniform distention for a day or more, according to the proportion of acid used, notwithstanding the fact that it is held in a medium which contains less caustic soda than was necessary to effect the uniform solution, or distention of the xanthate. Although the cellulose xanthate solution is in a more unstable condition than it was before the acid was added, it is said to remain in a solution sufficiently long to be conveniently handled and stored before spinning.

Transformation of Coagulated Viscose into Cellulose is, according to C. Ernst,[1] best accomplished by immersing the viscose for some hours in a strong sodium bisulphate solution until no more sulphur is abstracted, or, in another process the bisulphite is used in conjunction with aluminum sulphate.[2] Sodium sulphide, sulphydrate, thiosulphate, sulphite, and metabisulphite have also been claimed as efficient, used in 10–15% aqueous solution.

Another method of coagulation of viscose into viscoid, especially applicable to thin bands or filaments, is by means of a blast of hot air. This is accomplished in practice by causing the filaments as they emerge from the spinnerets to pass through a tube or chamber where they meet an ascending column of hot air, the temperature of the air and the speed of passage of filaments being regulated so that the air is sufficiently hot to properly coagulate the viscose by the time the filaments have fallen the required distance, but on the other hand the filaments must not have been coagulated so completely that their pliability is lost and they break upon reeling and winding.

C. Waite[3] has disclosed a process for preparing viscose after the general plan set forth in U.S.P. 520770 and 604206, but which will more slowly decompose, so that by reason of its prolonged life it is available or better adapted for use in certain instances. He has discovered that by adding one part by weight of spirits of turpentine for every part by weight of cellulose originally taken, the life of the compound is greatly prolonged and the time between ripening and regeneration into the insoluble form thereby extended. The turpentine is added directly to the alkali-cellulose immediately before its treatment with bisulphide.

Purification of Viscose. The crude solution of cellulose xanthate, prepared by the interaction of cellulose, alkaline hydroxide and carbon bisulphide is yellow from by-products of the action of the alkali on the bisulphide. It is necessary for the majority of uses to which the viscose is to be applied, and is always advisable to as far as possible eliminate these subsidiary products. The process of purification of C. Cross[4] is based upon the observation made by him, that

1. U.S.P. 863793, 1907. For method of transforming viscose to cellulose see Cross, Bevan and Beadle, E.P. 409, 1894; U.S.P. 604206, 1898.

2. Soc. france. de la Viscose, F.P. 334636, 1903. See P. Asbrand, abst. Zeit. ang. Chem., 1903, **16**, 143; A. Binz, Ibid., 1898, **11**, 595; L. Vossen, Chem. Zeit., 1896, **20**, 385; M. Manoukian, Ibid., 1900, **24**, 424.

3. U.S.P. 689336, 1901. See M. Kitschelt, abst. Lehne Färb. Ztg., 1898, **9**, 261, 282.

4. U.S.P. 763266, 1904; Port. P. 4475, 1903; Aust. P. Mar. 26, 1897; E.P. 21030, 1903; abst. J.S.C.I., 1903, **22**, 1363. In the method of purification of Cross, Bevan and Beadle (E.P. 3592, 1901; U.S.P. 717355, 1902), the crude viscose is treated with an excess of acetic acid, or other weak acid such as salicylic acid.

when the crude viscose has stood for a time at the ordinary temperature or when it is heated at temperatures at about 50° for a short time it attains a condition in which on addition of a solution of sodium bicarbonate the cellulose xanthate is precipitated. The precipitate is then further washed with sodium bicarbonate solution to remove the yellow by-products. The fact that the precipitant is of alkaline reaction enables the purification to be effected without separation of sulphur. The method is economical, as sodium bicarbonate is very cheap and its saturated solution contains only 8–9% of the salt. Moreover, the alkaline salts removed from the crude viscose are also in large proportion capable of conversion into bicarbonates and are then available for use in the purification process.

For example, crude viscose freshly prepared and containing 8–10% of its weight of cellulose is heated for one to two hours at 50°, with constant stirring. It is then treated with twice its weight of a saturated solution of sodium bicarbonate, the separated solid being broken up by agitation as the precipitation proceeds. The gelatinous cellulose derivative is then collected on a filter and further washed with a solution of sodium bicarbonate until sufficiently free from the by-products.

The alkali cellulose xanthate or viscose is not decomposed by the weak acid, whereas the by-products present, such as alkaline carbonate and sulphocarbonates, are broken up and their acids are given off in the form of gas. By adding also to the acidified viscose a neutral dehydrating agent, such as brine or alcohol, the purified alkali cellulose xanthate is precipitated in a non-viscous hydrated form. The precipitate is separated by pressing or centrifugal action, and may be further purified by washing it with diluted brine or alcohol and pressing. It is redissolved by water and obtained as a carbonate and inodorous solution. This solution, or the crude solution acidified by a weak acid, may be used for sizing and coating paper of high grades, for warp sizing, and for finishing textile fabrics. Insoluble salts of cellulose xanthic acid are produced by adding salts of the heavy metals to the acidified crude solution of viscose. For example, zinc acetate gives a precipitate of the zinc salt of cellulose xanthate, which is soluble in alkaline solutions such as ammonia The sulphur compounds given off in the purifying process and the acetic acid contained in the waste liquors may be recovered. The process may be modified by adding the dehydrating agent before the weak acid.

In E.P. 21030 above referred to the ordinary crude viscose, freshly prepared and containing 8–10% of its weight of cellulose in solution, is heated from one to two hours at 50° with constant stirring. It is then treated with twice its weight of a saturated solution of sodium bicarbonate, the separated solid being broken up by agitating as the precipitation proceeds. The gelatinous cellulose derivative is then collected on a filter, and further washed with a solution of sodium bicarbonate until sufficiently free from by-products. It is then treated in a press or centrifugal machine to remove excess of solution, then treated in a suitable vessel with a strong solution of NaOH added in sufficient quantity to redissolve the cellulose compound, that is, reforming the viscose in a purified form and deprived of alkaline by-products. In washing the precipitates, the use of sulphite of soda may also be used, and is of advantage in facilitating the removal of the by-products. A convenient strength solution for this purpose is obtained by dissolving 5–7 parts crystallized salt (Na_2SO_3, $7H_2O$) in 100 parts water. A solution of sodium chloride and sulphate may also be used, for the purpose of preventing rehydration or resolution of the product while under treatment. Solutions containing 5% by weight of anhydrous NaCl or Na_2SO_4 may be used for the purpose.

It is then treated in a press or centrifugal machine to remove excess of solution and finally reconverted into viscose of a purified condition by treatment in a suitable vessel with sufficient strong caustic soda solution to redissolve the cellulose derivative.

The sodium bicarbonate solution used in the treatment may be accompanied or succeeded by a solution of sodium sulphite of 5% strength to facilitate the removal of the by-products.

It is advantageous in further washing the precipitated hydrate to use a solution containing about 5% of a neutral salt, such as sodium sulphate or sodium chloride, by which washing the sodium bicarbonate used as precipitant may be eliminated, the neutral salt being used in order to prevent the product from redissolving during the washing treatment.

Cross, Bevan and Beadle [1] have observed that the alkali-cellulose-xanthate resists the action of acetic acid, while the alkaline hydrate and the alkaline salts present in the solution of the viscose are at once converted into acetates by this treatment. In the case of the alkaline carbonates, sulphocarbonates, etc., the weak acids combined with the alkali are liberated, and pass off in the form of gas or vapor. From this observation was evolved a process of purification based on the treatment of the viscose with acetic or other acids of weak affinity (formic or lactic), in excess without decomposing the cellulose compound. If the action of the acid is accompanied by that of a neutral dehydrating agent, such as brine or alcohol, the cellulose compound is precipitated as an alkaline salt of a non-gelatinous consistence, so that it readily parts with the mother liquors by pressure or centrifugal dehydration. The precipitate after being washed to remove saline by-products (acetates) may then be redissolved in water to a colorless solution of purified xanthate.[2] The Verein. Kunstseidefabr. A.-G.[3] produce viscose solutions, free from sulphides and suitable for the manufacture of brilliant threads or films by direct coagulation in mineral acids. They are prepared by treating the fresh, crude viscose in a highly dilute form (1% of cellulose) first with sufficient 0.1% sulphuric acid to neutralize the free sodium hydroxide present, and then with a quantity of aluminum sulphate, or equivalent salt of

1. U.S.P. 717355, 1902; E.P. 3592, 1901. See "Chemical Treatment of Viscose," Cellulose Products Co., Can. P. 76638, 1902, and "Purification of Viscose," D. Spruance, Can. P. 85922, 1904.

2. If the acidification be carried out in a closed vessel, volatile sulphur compounds may be recovered. The brine from which the compound has been precipitated contains alkaline acetates, which may be decomposed by HCl, and the acetic acid recovered by distillation.

3. F.P. 389284, 1908. For producing hydrated cellulose from viscose, for use in the production of films, explosives, etc., see A. Pellerin, F.P. 410776, 1909.

aluminum or chromium, sufficient to decompose the sulphides of the viscose. After standing for some time at the ordinary temperature, or after three to six hours at 40°, the cellulose compound separates in a hydrated form and is drained off and pressed. This compound is insoluble in water, but readily soluble in dilute sodium hydroxide; the solutions are suitable for spinning threads or films, which when coagulated in baths containing mineral acids, yield products distinguished by special physical qualities. A. Fielding [1] purifies by the use of sodium, calcium or aluminum bisulphite. E. Thomas, J. Bonavita and M. Olivier [2] have shown that the use of sulphurous acid and acid salts tender the viscose considerably, and render it practically worthless for certain purposes. They recommend the use of neutral sodium sulphite and zinc oxide, which removes both the yellow color and disagreeable odor, while materially increasing the durability of the product.

Or the crude cellulose xanthate may be completely coagulated by heating to 45–50°, a process which requires but a few hours and treating with salt solution to remove impurities without rendering the viscose insoluble in caustic soda; the viscose is finally dissolved in an alkali solution.[3] By another method [4] the higher cellulose xanthates are separated from the ripened and impure viscose solutions by means of carbon dioxide gas, the light-colored green jelly of purified viscose being washed until free from by-products, when it is finally dissolved in dilute alkali and is then ready for use. The inconvenience arising from using aqueous solutions of viscose in the unpurified state, due to the precipitation of sulphurized by-products which cause the viscose to become turbid in color and of a yellowish tint, may be overcome [5] by dissolving an amount of crude viscose equivalent to 100 parts original cellulose in about 1,800 parts of potassium hydroxide solution of 1.20 sp.gr. (or in general 3–4 times the weight of caustic potash to cellulose used) and heating the mixture to 60–80° until a little of the

1. U.S.P. 708760, 1902; E.P. 20397, 1901; U.S.P. 708760, 708761, 1902.

2. U.S.P. 717355, 1902; D.R.P. 133144, 1901; E.P. 3592, 1901; F.P. 309548, 1901. See W. Gardner, Text. Mfr., 1899, **25**, 153; Must.-Ztg., 1896, **45**, 507; A. Buntrock, Prom., 1897, **8**, 676; Zeit. ang. Chem., 1898, **11**, 981.

3. Process of Soc. France de la Viscose, F.P. 334636, 1903. In F.P. 334515, 1903, this firm describes a process for removing soluble sulphides from crude viscose by passing it through a solution of a salt of a metal which forms an insoluble sulphide, e.g., a 10% solution of ferrous sulphate.

4. Continental Viscose Co., Breslau, D.R.P. 209161, 1903; Belg. P. 173643, 1903; Lux. P. 5329, 1903; Swed. P. 19295, 1904; Hung. P. Nov. 12, 1903; Span. P. 32857, 1903.

5. Method of Vereinigte Kunstseidefabriken Akt.-Ges., U.S.P. 724020, 1903; E.P. 17502, 17503, 1902; Belg. P. 164907, 164908, 1902; D.R.P. 125309, 129426, 1900; 155745, 1902; F.P. 323473, 323474, 323475, 1902; 317094, 1901; 389284, 1908.

solution on a glass plate yields immediately a colorless, clear, firm film when dipped in concentrated aqueous ammonium chloride.

The apparatus for purifying viscose shown in Fig. 312 consists of a metal hemispherical basin 1 having a[1] vertical shaft 3, formed in two portions connected by a sleeve 16, driven by worm and pinion gearing 4, 5, and provided with agitating arms, 7, 8, 9, set at angles of 120° to each other and provided at their extremities with steel scrapers fitting the basin. By this arrangement, the mass is crushed, disintegrated, mixed intimately without becoming superheated, and reduced to a fine granular powder. When about to coagulate, a cold saturated solution of common salt is added to disintegrate the mass.

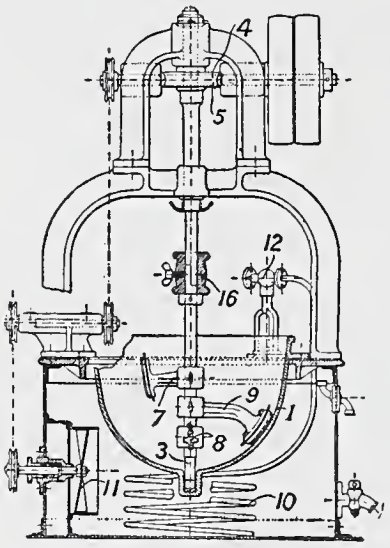

Fig. 312.—French Viscose Purifier.

The basin is heated by means of a water-bath, which is itself heated by a coiled steam-pipe 10, the temperature of which is maintained uniform by an agitator 11. A thermometer is inserted in the bath. An automatic regulator 12 shuts off the supply of steam when the maximum temperature is reached. In another method[2] the alkaline cellulose xanthate is separated from the impurities by first heating the solution one to two hours at 50° with continual stirring, after which it is treated with double its weight of saturated aqueous sodium carbonate. The precipitate formed is separated, washed with sodium bicarbonate and sodium sulphate solution. After centrifuging, the mass is dissolved in strong alkali solution, and becomes purified viscose. In order to prevent the absorption of water and resolution during this treatment, ammonium chloride and sodium sulphate is added to the solution.

M. Waddell's Method of Viscose Formation[3] seeks to produce a cellulose which is of uniform character, free from any dissolved fiber particles and to control the carbon bisulphide vapors liberated during the process of manufacture and prevent their escape into the atmosphere. In addition to the high inflammability of these vapors, their inhalation is decidedly prejudicial to health. Waddell in com-

1. Soc. France de la Viscose, E.P. 2357, 1904.
2. Viscose Syndicate Ltd. and C. Cross, E.P. 21030, 1903; D.R.P. 133144, 1901; F.P.309548, 1901; Russ, P. Mar. 19, 1901; C. Cross and D. Spruance, U.S.P. 763266, 1904.
3. U.S.P. 855213, 1907.

mon with others, has found that during the time when the alkali cellulose is being treated with bisulphide and afterward, the mass is particularly susceptible to the action of air, the latter causing reversion to the insoluble cellulose, i.e., the first-formed portions of cellulose xanthate are likely to be partially or wholly reverted, while the remainder of the cellulose is being converted into xanthate.

In order to avoid these objectionable features, the alkali cellulose is submerged in bisulphide in a vessel hermetically sealed until the treatment is completed. As much as possible of bisulphide is drained off, the remaining cellulose xanthate being covered with an aqueous solution of sodium hydroxide, in proportion and strength to render the xanthate of the required consistency for filament formation. The excess of bisulphide is removed by means of a vacuum, the vapors being condensed rather than allowed to issue into the atmosphere. The advantages claimed for this method are the production of a uniform viscose because the xanthate is at all times excluded from the atmosphere, the process permitting control of the noxious carbon bisulphide vapors liberated from the mass under treatment. By entirely surrounding the alkali cellulose with liquid it is claimed that the tendency of the xanthate to form into dense masses, preventing the complete treatment of the interior until after the exterior has been overtreated is avoided, the alkali preventing agglomeration of the xanthate.

The invention of C. Leclaire [1] relates to an arrangement by which all the operations in connection with the manufacture of viscose are carried out in a single vessel. For this purpose the pulp, or paper, serving as the raw material, is first torn into small fragments of the size of sawdust. This is charged into the machine, which consists of a large spherical or elliptical vessel mounted on a hollow trunnion and geared so as to receive both a rotary and oscillating motion. The vessel contains balls to prevent the material from clogging together in a solid mass. It is provided with connections communicating with sources of gaseous pressure and vacuum, also with orifices for the introduction of reagents or water in the form of a spray, and is surrounded by a jacket for the circulation of a heating or cooling medium.

In the process of H. Seidel,[2] 100 parts of sulphite cellulose are first treated with 1% hydrochloric acid for several hours, washed, and intimately mixed with 40 parts of caustic soda dissolved in 100 parts of water. The mass is left in a closed vessel for three days for the

1. F.P. 402804, 1908; First Addition thereto dated Sept. 7, 1908; abst. J.S.C.I., 1909, 28, 1270.

2. Mitteilungen des K. K. Technologischen Gewerbe-Museums in Wien, 1900, 10, 35.

alkali to thoroughly permeate, after which 100 parts of carbon bisulphide is gradually introduced with stirring, and the mixture allowed to "age" for twelve hours. From the yellow solution formed the viscose is precipitated out by alcohol or saturated common salt solution. Viscose prepared in this manner from sulphite cellulose is said to dissolve less readily, but has the advantage of being lighter in color, and is claimed to be especially adapted to sizing papers.[1]

Filtration of Viscose Solutions. Irrespective of the care exercised in manufacture, there is always present undissolved particles of cellulose only partially or imperfectly acted upon, and viscose partially decomposed into viscoid, all of which it is necessary to remove before attempting to force the viscose solution through the minute orifices in the formation of filaments. The methods of clarification by subsidence described in Chapter IX, for cellulose nitrate solutions, are too time-consuming. The method of C. Stearn, cited elsewhere[2] has been objected to on the ground that although the pores and interstices of the filter may be smaller than the normal size of the insoluble particles which it is designed to retain, they may be contorted or compressed to such an extent as to cause a small proportion to pass through the filtering medium.[3] It has been

1. In this connection see Faust, Papierfabr. M. A., 1904, p. 655; Papier Z., 1897, **2**, 3396; Ferenezi, Zeit. ang. Chem., 1899, **13**, 11; Mont. Scien., 1899, (3) **41**, 601; Must. Z., 1898, **48**, 39.

2. E.P. 16604, 1903.

3. The insoluble suspensions in viscose are often so nearly the density and refractive index of the solution itself, that it is practically impossible to judge by visual examination alone of the fitness of such a solution as regards suitability for thread formation. And it is evident that a solution improperly filtered is wholly unsuitable for the formation of filaments, for upon forcing such a solution through the spinnerets of a spinning apparatus, the insoluble, gelatinous particles either clog the minute orifices, or if projected through, decrease materially the tensile strength of the viscoid formed. And in such instances, increase of pressure as an aid in forcing the solid particles through the spinnerets does not remedy the difficulty. In the pumping, regulating and filtering apparatus of C. Topham (E.P. 5766, 1905; D.R.P. 125947, 1900; Belg. P. 157100, 1901; 138507, 1901; F.P. 309541, 1901; C. Stearn and C. Topham, Belg. P. 174194, 1903; E.P. 16604, 1903) a support is connected with the main viscose supply, and provided with pivot joints maintaining in position the filter, the pump and the nozzle arm all being clamped together and bored internally so that there is a direct passage from the viscose main to the squirting nozzle. The filter consists of two plates clamped together and provided upon their internal faces with the projections between which the filtering medium is firmly held, passages being provided for the viscose to pass between the projections. On the discharge side of the filter the supporting plate has a hole covered with an elastic diaphragm, which is distended by the pressure of the filtered viscose when the filter is working freely, but which collapses when the filter fails to pass more viscose than the pump is drawing away. The filtered viscose is drawn away by a plunger pump constructed without an inlet valve, a recess being provided beneath the plunger in which the viscose is trapped by the plunger. At the bottom of the recess is the delivery valve, closed by a spring, which requires a higher pressure to open it than the pressure of the viscose entering the pump. The difference in pressure is overcome by the work of the plunger on the column of viscose above the valve. The delivery valve either can be wholly

claimed [1] that by compressing the filtering material so that the pores or interstices between fibers are made somewhat smaller, and the fibers more firmly and definitely located within the body of the filtering material, which is done by subjecting the filtering material to external pressure, the gelatinous particles are prevented from moving or dislocating the fibers, as is the case when it is not under external pressure, greater than that sufficient to force the viscose itself through the filter. Furthermore, if the material of the filter is not subjected to auxiliary or external pressure greater than that to which the viscose itself is subjected, the fibers of the cotton or glass wool will, in a measure, have a tendency to float in the viscose, and thus be not firmly located so as to interrupt the passage of the gelatinous particles. According to the claim of the inventors, the external pressure fixes the spaces or pores between the fibers of the filter material so that they are not pushed aside to allow the passage of the impurities, the spaces between the fibers are maintained in much more constant and fixed diameter than before, the pores also being considerably more reduced in diameter than when not subjected to external pressure.

In the apparatus as shown in Fig. 313, 1 is a plan view of one form of a suitable filter, and 2 a transverse sectional view.

Referring to the drawings, the numeral 1 indicates the upper plate or casing of the filter, and the numeral 2 the lower plate. These plates are provided on their inner faces with shallow circular recesses, as indicated at 3 and 4, which communicate with inlet and outlet pipes 5 and 6 respectively, placed preferably at the center of the plates. Adjacent the surface of the recess 3, is placed a piece of wire gauze, or other suitable stiff woven material, 7, having a series of meshes, and also on the surface of the recess 4, a similar piece of wire gauze

emoved for cleaning or can be loosened to such an extent that a rush of viscose sweeps any accumulated dirt through a passage to the outside, opened by the operation of loosening the valve. After passing the delivery valve the viscose is delivered to the nozzle arm, an air chamber in the form of a bottle being clamped against an opening in the side of the delivery tube to ease the flow. It is customary to provide for the transmission of the filtered viscose solution directly to the storage tanks, care being taken that the solution is exposed to the atmosphere as little as possible.

1. C. Ernst and G. Hamlin, U.S.P. 876901, 1908. In another method, porous plates of cellulose are made use of as the filtering material. These plates are placed upon a perforated metal plate to give rigidity during the subsequent application of pressure. The plates form one end of a cylinder, into which the viscose solution is introduced, pressure applied, and gradually increased as the cellulose filter plate becomes clogged. The pressure is usually so adjusted that a constant definite flow of filtered viscose is obtained. When the filter has become so clogged that the viscose refuses to pass through upon application of the maximum pressure, the viscose in the cylinder is replaced by water which partially clarifies the filter, so that it may be used again. The filtrate, containing a small amount of viscose, may be used in the place of pure water for the preparation of fresh amounts of xanthate.

is indicated at 8. Upon the wire gauze 8, is placed a piece of cloth 9, sufficiently meshed to prevent the filtering material from passing through, and for allowing the viscose to easily pass. Between this cloth 9 and the upper gauze 7, is placed the filtering material, consisting of any suitable substance, such as cotton or glass wool. This filtering material 10 is placed within the recesses, and extends outwardly between the flanges formed by the recesses, as indicated at 11.

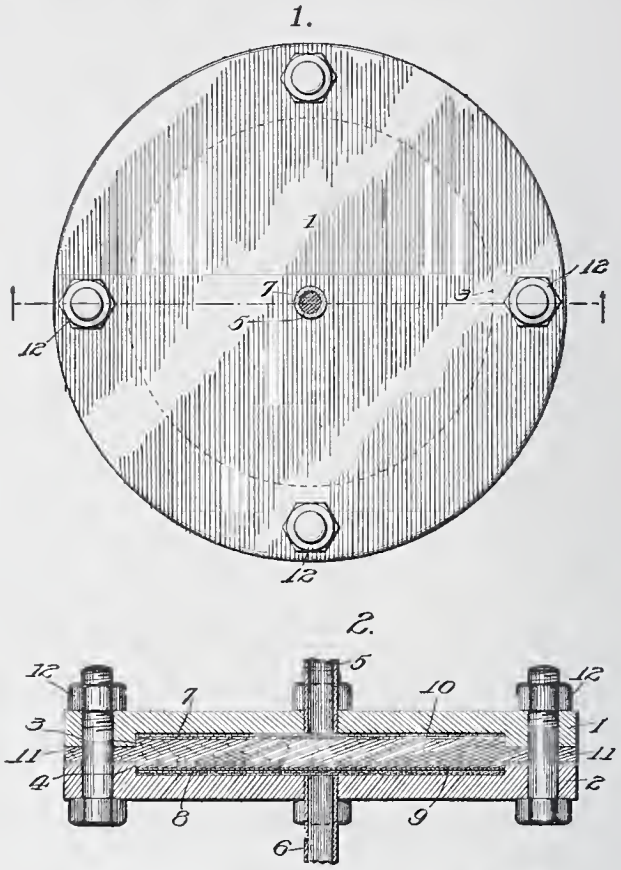

Fig. 313.—The Ernst and Hamlin Viscose Filter.

This filtering material, before being compressed, is placed in position to a depth or thickness of approximately three inches, and pressure is then put upon the same, so that the filtering material will be under a pressure greater than that to which the viscose is subjected, the pressure being somewhat varied according to the circumstances and condition of the viscose. As means for producing this pressure there are provided clamping devices, indicated as bolts 12, passing through the flanges formed by the recesses 3 and 4. When the filtering material is clamped between the flanges, as well as between the recesses in the plates, considerably more pressure is brought upon the filtering material,

thereby forming a packing which prevents the viscose from passing laterally out of the filter. The plates of gauze 7 and 8 provide spaces by which the viscose may pass over the entire upper surface of the filtering material and may be withdrawn from the entire lower surface, thus causing the filter to act uniformly and evenly throughout its entire body.

Removal of Air from Viscose Solutions. Where the viscose is intended for the manufacture of articles of small mass such as fila-

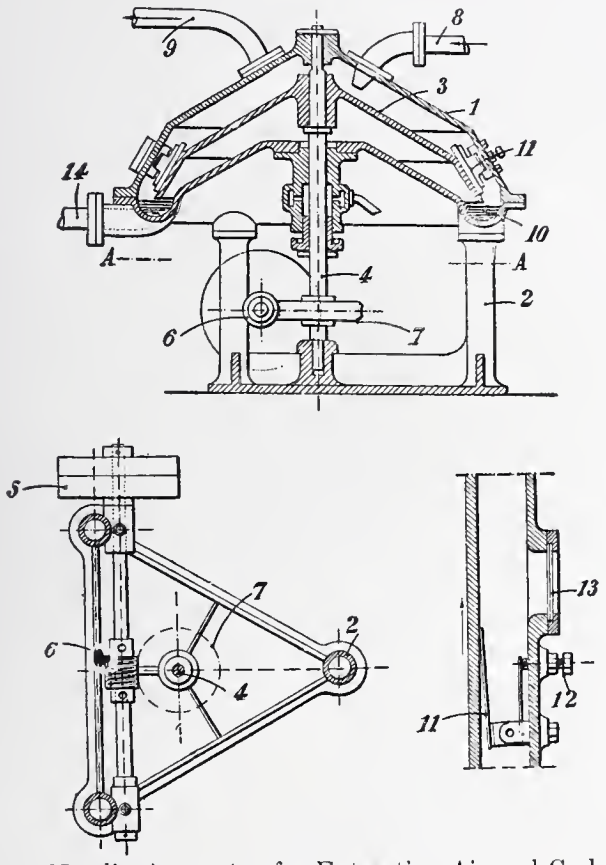

Fig. 314.—The Naudin Apparatus for Extracting Air and Carbon Bisulphide from Viscose Solutions.

ments and films, especially the former, the solution should be free from all air bubbles, and all free carbon bisulphide contained in solution. In spinning viscose into artificial filaments the thread breaks off short at the thread-drawing device on the occurrence of bubbles of air and often with free carbon bisulphide in the viscose drawn from the fixing tank. The apparatus illustrated in Fig. 314,[1] has for

1. L. Naudin, Assignor to La Soc. Fran. de la Viscose. U.S.P. 767421, 1904; E.P. 2357, 1904; 17152, 1905; Belg. P. 173572, 1903; D.R.P. 160244, 163661, 1904; F.P. 340563, 340690, 1904; 351089, 1905; Aust. P. 19037, 19041, 1904; Swiss. P. 30768, 1904; Span. P. 33511, 1904; Hung. P. March 22, 1904.

its object the extraction of air and bisulphide vapor from the solution, 1 showing the apparatus in section, 2 being a section of 1 through the line *AA*; 3 shows a detail. In the interior of the viscose-receiver 1, which is designed for the treatment of the viscose, there is adapted to rotate a conical part 3, composed of polished steel, for instance, keyed on a shaft 4, that is, actuated from outside the viscose receiver by means of suitable mechanism, such as a pulley 5, worm 6, and gear or worm wheel 7. The upper part of the viscose receiver is fitted with two pipes 8, 9, of which one, 8, communicates with a supply of viscose, and the other, 9, communicates with a vacuum pump. After a practical vacuum has been formed in the viscose receiver the stop-cock of the pipe 8, communicating with the supply of viscose, is opened and the conical part 3 in the viscose receiver caused to rotate at the rate of about six revolutions per minute.

The viscose which enters through the supply pipe 8 spreads out in a very thin layer over the rotating conical part and by the action of centrifugal force and of gravity travels to the lower part of the rotating conical part. In its travel the viscose is squeezed against the conical part 3 by suitable blades or stirrers 11, and it then flows or falls into a receiving channel 10. The rate of supply of the viscose to the receiver should be such that the whole of the viscose arriving in the receiving channel 10 shall have been completely freed from air and carbon bisulphide. A set-screw 12 is provided to enable more or less stiffness to be imparted to the stirring-blades from the outside.

An observation-hole 13 is provided in the shell of the viscose receiver to enable the working of the apparatus to be controlled or regulated. The viscose flows from the receiving channel 10 through a discharge pipe 14 into a vacuum vessel communicating with the receiver.

This apparatus can be cleaned without being taken to pieces by simply introducing water under pressure through the supply pipe 8 into the receiver while the movable conical part is being caused to rotate rapidly. The washing-water is then expelled, preferably by means of compressed air.

Properties of Viscose Solutions. The decomposition of a viscose solution is first recognizable by an increase in viscosity of the mass upon standing. In the preliminary gelatinization stages the mass may be restored to its original fluidity by dilution with cold water and stirring, although when the decomposition becomes more pronounced, attenuation with water gives a granular and not soluble mass. As decomposition progresses the viscosity and insolubility

increases until the mass has entirely jellified. Carbon bisulphide and other volatile sulphur products continually escape, the final result being a hard mass of cellulose. As Cross and Bevan have pointed out,[1] the character and properties of a viscose solution are dependent on the following factors:

" (1) The particular cellulose employed; (2) previous preparations; (3) the concentration and temperature of the alkaline hydrate (solution) employed in preparing the alkali-cellulose; (4) the uniformity or otherwise of the alkali-cellulose in respect of the ratio of cellulose to alkali and to water; (5) the period elapsing between the production of the alkali cellulose and its exposure to carbon bisulphide; (6) the initial and maximum temperature of the mass during the reaction; (7) the duration of the exposure to the bisulphide; (8) the mode of treating with water for effecting the solution of the product."

If, as for instance, in using viscose for sizing, it is desired to induce more than normal decomposition at the ordinary temperature, this may be done by replacing the soda by ammonia, ammonium viscose being less stable than soda viscose. The decomposition takes place at a much lower temperature with copious evolution of carbon bisulphide and ammonia.

L. Vignon [2] has made optical determinations of viscose solutions, from which it appears that the cellulose thiocarbonates are probably feebly dextro-rotatory.

Storing Alkali-Cellulose and Viscose. Both alkali-cellulose and viscose being products of but slight constancy and ready decomposability, especial precautionary measures have to be adopted to preserve the compounds until they can be used. The decomposition of both appear to be more rapid with increase in temperature, therefore refrigeration during storage is the best procedure to insure the minimum of change. Soda-cellulose which has undergone change by long storing cannot produce a very thickly fluid viscose. In addition to low temperatures, viscose must be protected from contact with the atmosphere. A temperature as near 0° as possible, air being entirely excluded from the storage containers results in a minimum deterioration. In warm weather viscose should be shipped only in refrigerator cars, and otherwise treated in handling as with beef and other perishable products.

Artificial Filaments from Viscose. Much of the information stated in Chapter XIII, in regard to "Pauly silk," is applicable to " viscose silk," both being cellulose and the final product practically

1. "Researches on Cellulose II," p. 98.
2. Bull. Soc. Chim., 1904, **31**, 105.

the same. Viscose threads are distinguished by their great luster and fineness, in the latter respect being equal to the finest quality of natural silk. A comparison of the physical characteristics of artificial filaments made from viscose and nitrocellulose with natural silk is given elsewhere. As regards cost, viscose filaments are much the cheaper of the artificial threads of commerce, and are no more inflammable than ordinary cotton.

The general representative method of forming threads from viscose consists in squirting the properly clarified solution through orifices of predetermined diameter, into a setting solution which prevents the threads from sticking together, after which they are further congealed, changed into viscoid by reverting agents, bleached and woven into fabric form. The several apparently meritorious refinements of this general process which have been introduced from time to time are noted below.

In the manufacture of threads and filaments from viscose it is advantageous to spin the thread directly onto spools and to treat the thread in all the further stages of reverting, washing and drying while it remains on the spool. In order to obtain the desired luster it is necessary, as in the commercial processes of mercerizing cellulose, to dry the filaments under tension, this being very important in the drawing stage of the process. In the method of C. Ernst,[1] which relates mainly to the method of subjecting the threads in the drawing stage of the process at a certain portion of their length between the spool and the perforated cap to an unevenly distributed tension while the threads are still in a semiplastic condition, this imparts greater and more uniform strength and a higher luster.[2] The method is shown in detail in Fig. 315, in which 1, represents a longitudinal section of the apparatus, 2 a cross-section taken on the line 2, 2 of 1, and 3 and 4, details of construction. The tank of the setting-bath is indicated by 1, in which is kept the ammonium sulphate, sodium bisulphite or similar solution. The viscose solution is forced under pressure through tubes, one of which is represented by 2, being ejected into the setting-bath through the head 3. Sufficient material is ejected through the head to allow of the ends being secured to one of a series

1. U.S.P. 808148, 1905. See also Ernst, U.S.P. 798027, 1905; and Lehne's Färb. Ztg., 1901, **12**, 214; E. Kirchner, Chem. Ztg., 1898, **22**, 719; R. Loewenthal, Ibid., 1894, **18**, 858; 1895, **19**, 524; 1899, **23**, 742; 1902, **26**, 752.

2. In previous methods it was difficult to exert upon the filaments the desired amount of tension, as the greatest strain is upon that portion of the thread where it is most plastic, which is of course the point where the plastic material first enters the setting-bath from the perforated cap, or the point where the threads first enter the setting-bath. Therefore a limited amount of tension only can be exerted. This is sufficient, however, to produce practical results.

of spools 7, after passing between the rods 4 and 5, the spool then being given a rotary motion in the direction of the arrow, thus drawing the filaments through the setting-bath at a given speed and hence a predetermined tension. The maximum tension upon the filamentous material is possible by the rods 4 and 5, and upon that portion of the threads which extends between the spool 7 and rod 5, which portion having passed through the setting-bath, is more solid and substantial

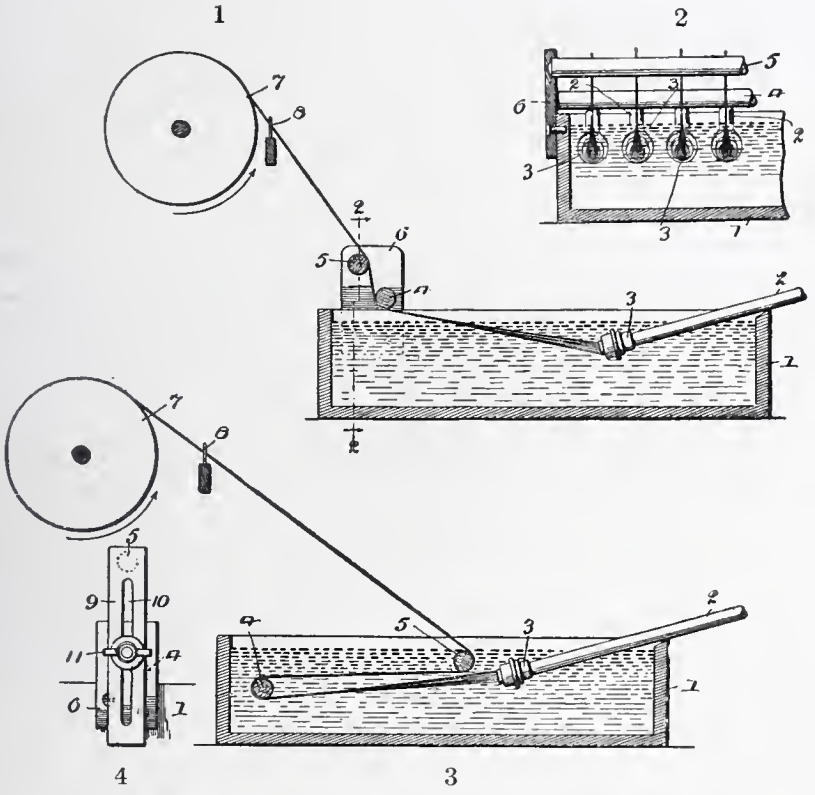

FIG. 315.—Method of Forming Viscose Filaments According to Ernst.

throughout. Less tension is exerted upon that portion of the threads which extends between the rods 4 and 5, and the least tension upon the softer and more plastic portion between the rod 4 and issuing orifice 3.[1] 8 represents a vibrating thread guide

1. The weakest and most ductile portion is of course that portion of the threads as it emerges in the semiplastic condition from the perforated cap and before it has been in the setting-bath any length of time. If the same tension should be exerted upon this portion of the threads as may be exerted upon the portion between the spool 7 and the rod 5, it would either break off the threads or draw them entirely too finely and either weaken or destroy the filament. After the thread has passed the rod 5 on its passage to the spool 7 while it is substantially still very ductile, the amount of tension which is capable of being exerted upon the thread at this stage without drawing the thread or filament is much greater than that which may be

by means of which the strands are laid in layers or courses on the spool.[1]

A twist may be given to the thread either during the process of spinning or in a separate operation afterward. With viscose silk [2] it has been proposed to revolve the spinneret, so that twist would be imparted during coagulation, but in general the coagulated thread is carried over a roller from which it falls into a rapidly rotating box. The degree of twist is dependent upon the relative speeds of the roller and the box. These methods are not applicable, however, in the case of the cuprammonium and the nitrocellulose products, as the fibers obtained do not appear to coagulate sufficiently rapidly to stand the mechanical strain. The twisting of the thread in a separate operation has the advantage that the degree of twist can be more accurately controlled. The silk after coagulation is wound directly upon bobbins of small diameter; these are fixed in a winding machine and are rapidly revolved while the thread is reeled off into hanks.

In another method [3] the viscose solution is fed under pressure through a regulating valve into the filtration chamber contained in the bracket supporting the twisting and spinning element. This latter consists of a vertical tube, rotated by a flexible connection at the top end, and supported on two sets of ball bearings carried by the tubular bracket. The viscose flowing from the filtration chamber enters the rotating tube about the middle, and descends to the spinning

exerted at the primary stage, and therefore the threads or filaments at this portion may be subjected to a much greater tension, adding greater luster to the thread as well as imparting to it greater strength.

While the drawings only represent one set of tubes and perforated caps, filaments and spools, a series are preferably arranged of similar character side by side at proper intervals apart throughout the width of the tank, as indicated in 2.

1. The amount of friction on the rods 4 and 5 and the tension on the threads may be varied by changing the relative position of the rods. As shown in 3, the rods may be so placed that the strands wrap around a considerable portion of the periphery of each rod. Such an arrangement is desirable where it is preferred to put a considerable amount of stretch into the thread. In the form shown in 1 the rods are closer together, and the threads contact with a less portion of the periphery of the rods, producing less friction. In the form shown in 3 the threads are subjected to a considerably longer period of immersion in the bath, and in this case both of the rods are submerged.

In the detailed drawing shown in 4 the upper rod 5 is mounted at one end of the movable support 9, while the other rod 4 is mounted in the fixed support 6. The support 9 is adjustable by means of the slot 10 and thumb-screw 11. By this means the rods 4 and 5 can be readily and accurately adjusted relatively to each other to produce the proper tension for any character of thread.

2. Process of Fürst Guido Donnersmarck Kunstseiden and Acetatwerke, F.P. 398424, 1909. D.R.P. 152743, 1903; 153817, 1904; Aust. P., Jan. 1, 1899; Max Müller (U.S.P. 836452, 1907) prefers sulphuric acid and sodium bisulphate as the coagulating medium for viscose. See also A. Bardy, F.P. 313464, 314554, 1901; American Viscose Co., Can. P. 66000, 1900.

3. Method of Soc. Franc. de la Viscose, F.P. 345274, 1904; see also E.P. 20396, 1901; 19157, 19158, 1908; F.P. 406344, 1909; abst. J.S.C.I., 1909, **28**, 1880. E.P. 17152, 1904; F.P. 345274, 1904; abst. J.S.C.I., 1904, **23**, 1212.

jet. Right- and left-handed helices are provided on the outside of the rotating hollow spindle, above and below the point where the viscose enters, to prevent any substance, either lubricant or viscose, setting between the spindle and its support. The threads are formed and twisted as they leave the rotating orifices of the jet; the latter is surrounded by a funnel-shaped appendage, which imparts a whirling motion to the coagulating liquid.

M. Waddell has devised a meritorious but somewhat elaborate method of forming viscose filaments [1] shown in detail in Figs. 316–320, which has for one of its objects arrangements whereby the filaments are at all times within reach of the operator and accessible. The process also admits of a thorough treatment of the filaments as they

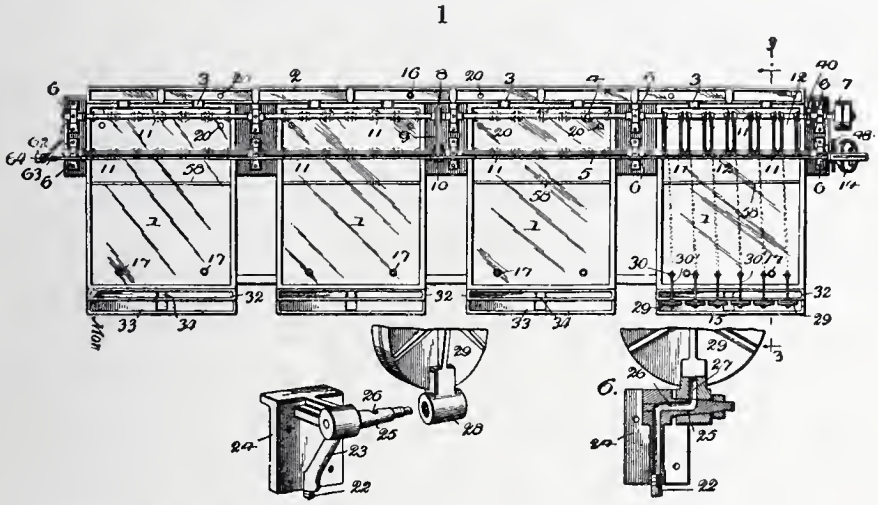

FIG. 316.—The Waddell Apparatus for Forming Metamorphosed Cellulose Filaments.

traverse the fixing bath into which the xanthate is ejected, and also as they are wound by maintaining circulation of the fixing solution in the tank, the filaments being caused to traverse the bath in a direction opposite to the flow of the fixing solution. The operation of the machine is as follows: Motion being communicated to the winding rings 12 and to the traverse rod 13 and the combined filtering

1. U.S.P. 846879, 1907; see M. Leidesdorf, Textil Färb. Ztg., 1907, p. 587, for discussion of history, manufacture and uses of "luster-cellulose." Also Süvern and Mach, Lehnes Färb. Z., 1903, **14**, 54; 1906, **17**, 1097; K. Süvern, Ibid., 1899, **10**, 169, 189, 208, 340; Chem. Zeit., 1901–1902, **1**, 185, 412; 1902–1903, **2**, 437, 539; 1903–1904, **3**, 75, 454, 807; 1905, **4**, 539. F. Beltzer has observed that an aqueous solution of viscose, prepared from cotton fibers, when exposed to the air slowly deposits minute filaments which interlace and form a delicate, reticulated web, and this has given rise to the thought in the mind of H. Rousset (Rev. gén. sci. pur. appl., 1910, **20**, 831) that it may become possible to prepare artificial silk fabrics directly, without first making threads and weaving them, as suggested first by Réaumur, in 1734.

and spinning heads swung on their pivots into the position indicated in dotted lines in 3, the viscose is forced through the pipe 22 and bracket 24 to the filter 29 and thence through the tube 30′ to the

2

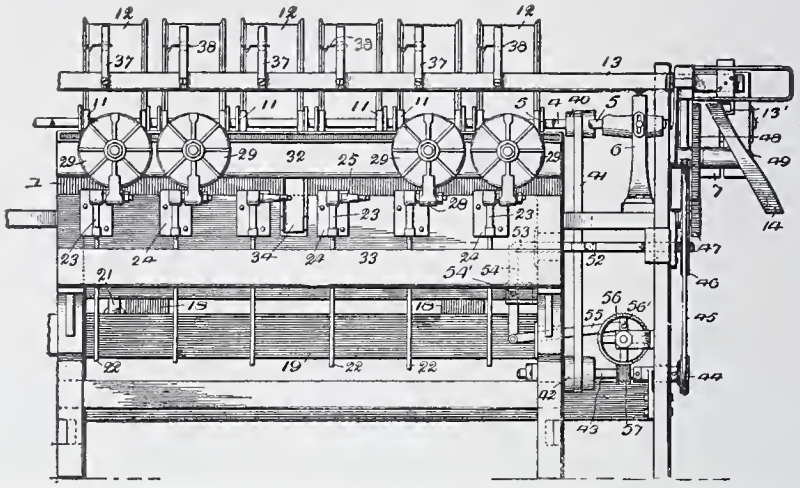

Fig. 317.—The Waddell Apparatus for Forming Metamorphosed Cellulose Filaments.

spinneret 30. The viscose emerging from the spinneret 30 is allowed to drop into the tank 32 until it is flowing evenly through the spinneret, whereupon the filter is swung into the position shown in full lines in

3

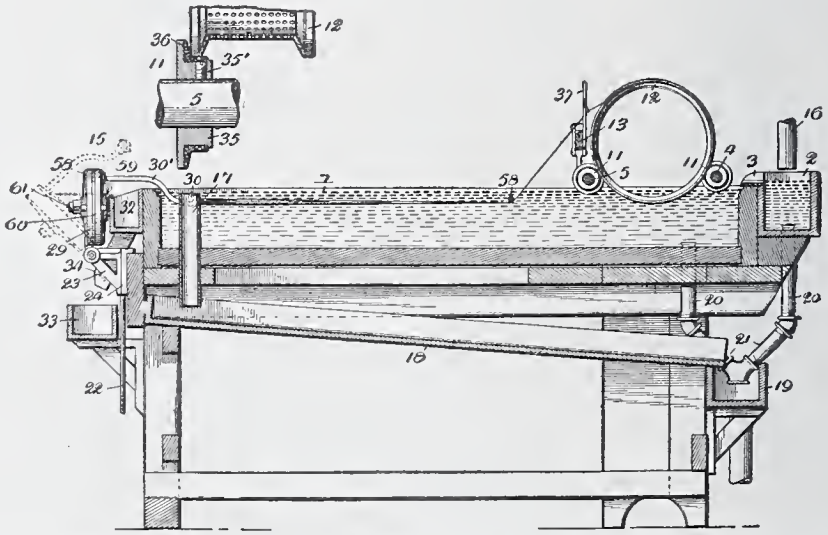

Fig. 318.—The Waddell Apparatus for Forming Metamosphosed Cellulose Filaments.

3, with the spinneret 30 beneath the surface of the liquid. The filaments are then conducted under the rod 58 to the winding rings 12 through the thread guides 38. The fixing liquid is caused to circulate

from the feed trough 2 over the dams into the tanks and thence through the overflow pipes 17 and inclined troughs 18 to the tank 19 in the manner described above. The filaments and the bath or tank travel in the opposite direction to that of the flow of the fixing liquid in the tank and a thorough and complete action of the liquid on the filaments traversing it is effected. The filaments being laid in open courses upon the rings 12, which rings themselves dip beneath the surface of the fixing liquid in the tank, secures a further action of the liquid upon the filaments, the filaments being in actual contact with the fixing liquid a much longer time than is usual in machines of this class.[1]

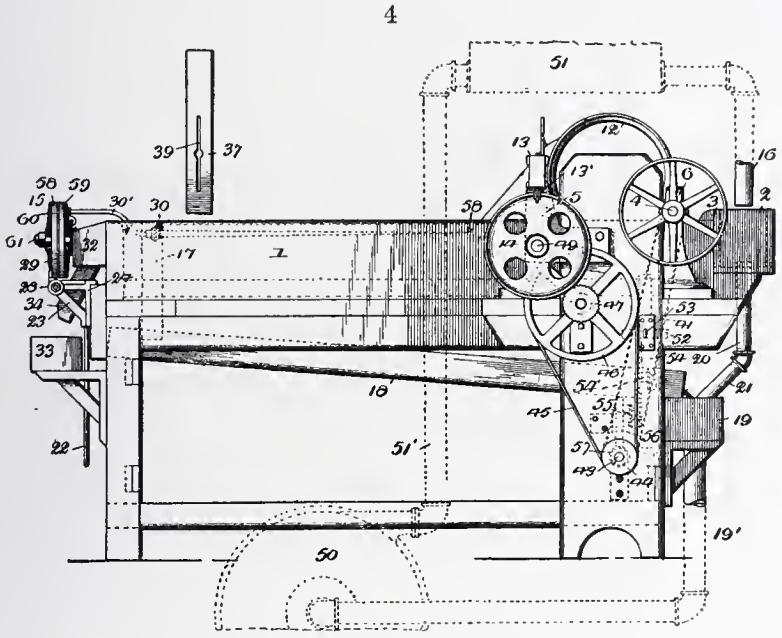

Fig. 319.—The Waddell Apparatus for Forming Metamorphosed Cellulose Filaments.

With the object of preventing individual filaments of viscose from adhering to one another when a number of them are twisted together to produce threads suitable for weaving purposes, a mixture of an alkali (sodium or potassium) aluminate and an alkali silicate is either added to the solution from which the filaments are formed, or is employed

1. In a more recent process by M. Waddell (U.S.P. 849822, 1907) an apparatus is described (see Fig. 319) in which the spinneret is rotated during the discharge of the viscose into the setting solution, and the spinning-tube also arranged to deliver the setting solution itself simultaneously with the discharge of the viscose filaments. With the process of C. Leclaire, (F.P. 402804, 1908; 414520, 1909; E.P. 20593, 1909) the viscose or other composition is forced by means of a pump giving a constant flow along a flexible pipe and through the holes of a revolving nozzle into a coagulating bath. The nozzle, which is provided with a filtering device just before the point of delivery, is rotated by means of a water turbine which also drives the pump. The spinning nozzle is so mounted that it can be lifted out of the coagulating bath without stopping the machine.

in place of ferrous sulphate used for the same purpose, in a bath through which the filaments are passed immediately after their formation.[1] The first of these methods is to be preferred. The threads obtained, it is stated, besides being silky in appearance and to the touch, dye very regularly. F. Lehner[2] produces an "artificial hemp" by cementing a number of artificial filaments by means of a dyed viscose solution, which is acted upon by a mineral acid to fix the binder and separate the sulphur.

H. Chavassieu[3] produces artificial filaments from viscose and a proteo-cellulose product. A protein substance, as fibrin, casein, silk or wool waste, horn, hide or leather, is treated with alkalis, as 10%

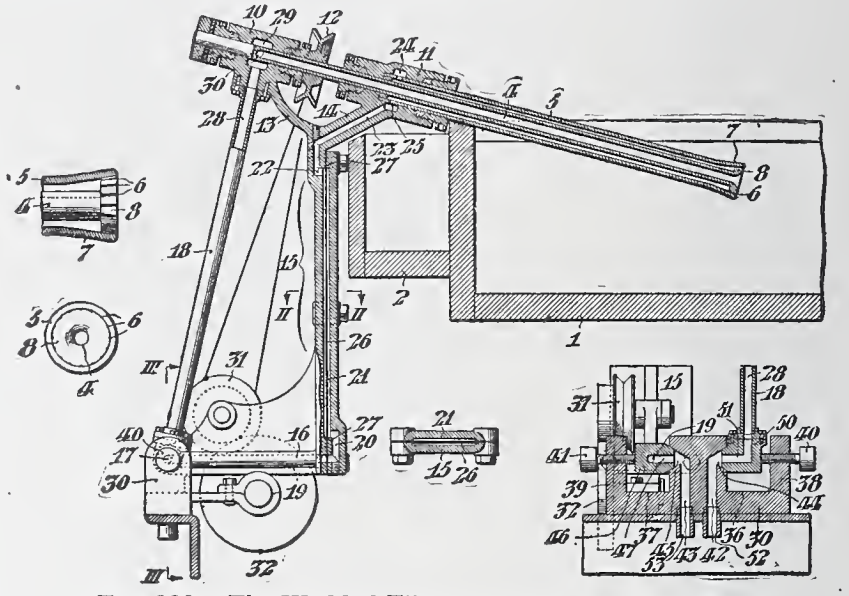

Fig. 320.—The Waddell Filament Forming Apparatus.

NaOH solution and carbon bisulphide to form a viscous solution, a solution of cellulose xanthate being then added and the solution precipitated by an ammonium salt, as sulphide, the product thus obtained being decomposed by dilute sulphuric acid, the resulting product

1. Soc. Franc. de la Viscose, E.P. 2357, 1904; 8045, 1906; F.P. 361319, 1905; Hung. P. Mar. 22, 1904; F.P. 339564; abst. J.S.C.I., 1904, **23**, 725; F.P. 323474, 1902; 334515, 1903; 345343, 345373, 1904; Swiss P. 30322, 1904.

2. U.S.P. 852003, 1907. See C. Woltereck, E.P. 3898, 1898; in the process of F. & A. Lehner (U.S.P. 724020, 1903) the viscose solutions are injected in thin streams into sulphuric acid and the resulting product wound and desulphurized.

3. U.S.P. 950435, 1910. See also W. Massot, Zeit. ang. Chem., 1904, **17**, 854; 1905, **18**, 1041, 1089. L. Collardon (D.R.P. 225134, 1904; U.S.P. 953319, 1910) combines viscose with cork, leather and wool waste, to form plastic masses capable of taking a high polish. J. Morison (E.P. 22371, 1907) prepares a composition for waterproofing fabrics, consisting of petroleum residue, pitch or bitumen (digested with volatile liquids) 1, and viscose 2, or 3.

treated with tanning substances, as quinone or tannin, and finally to the action of condensing and dehydrating agents, as potassium bichromate and acetic anhydride with glacial acetic acid, to increase its resistance and elasticity.

The extreme viscosity of solutions of viscose makes the threads directly after leaving the filaments especially suitable for attenuation by drawing, by which means very fine threads may be formed, and several times finer than the diameter of the issuing orifice.

Viscose filaments when properly coagulated, bleached, soaped and finished, resemble in luster the cellulose obtained from cuproammoniacal solutions more than those filaments obtained from nitrocellulose. In luster, softness of feel, tensile strength and readiness of absorbing synthetic dyestuffs, they compare favorably with artificial filaments prepared from other sources. They do not, however, compare with cellulose acetate filaments when wetted, viscose filaments being seriously impaired in strength when wetted, which strength, however, is regained upon drying of the filaments. The commendable points of viscose filaments as compared with those produced in other processes, are cheapness, wood pulp being used as the source of cellulose; safety, the filaments being no more inflammable than raw cotton; with a luster comparing favorably with that produced by the methods previously described. As in other artificial filaments, the individual viscose threads are too small to be worked by themselves. After twisting and reeling a number into one, the exact number depending on the fineness of the fabric to be made, they are finished as described in Chapter XIII.

The method of A. Delubac [1] for preparing and treating viscose threads, produces a filament possessing a dye-absorbing power superior to that obtained by other means, according to the inventor's claims. The apparatus is shown in 1, 2, 3, 4, 5 in Figs. 321 and 322, in which 1 is a diagrammatic view of the general arrangement of the apparatus, 2 and 3 are side and front elevations respectively, and 4 and 5 are front and sectional views of the drier. The viscose is contained in the closed reservoir 1, the pipe 2 conveying it to the draw plates 4, which are immersed in the coagulating bath. The pipe 2 being open, the supply is regulated solely by the constancy of the pressure of the compressed air. As soon as the thread has become coagulated in the bath 5, it passes successively into the baths 6, 7 and 8, bath 6 consisting of 6% aqueous sulphuric acid at a temperature of 70°, bath 7

1. F.P. 377424, 1906; U.S.P. 923777, 1909; abst. J.S.C.I., 1907, **26**, 1087; See also H. Hennebutte and A. Mousseu, Belg. P. 180585, 1904; H. Kaiser, Belg. P. 184078, 1905; A. Haller, Industrie Textile, 1904, **20**, 69; L. Gillet, abst. Chem. Ztg., 1898, **22**, 425; L. Gottstein, Ibid., 1904, **28**, 925.

containing water at the room-temperature, but in circulation; while bath 8 contains water, soap, oil and soda, intended to neutralize all remaining traces of acid and prevent the thread from adhering in the drier.

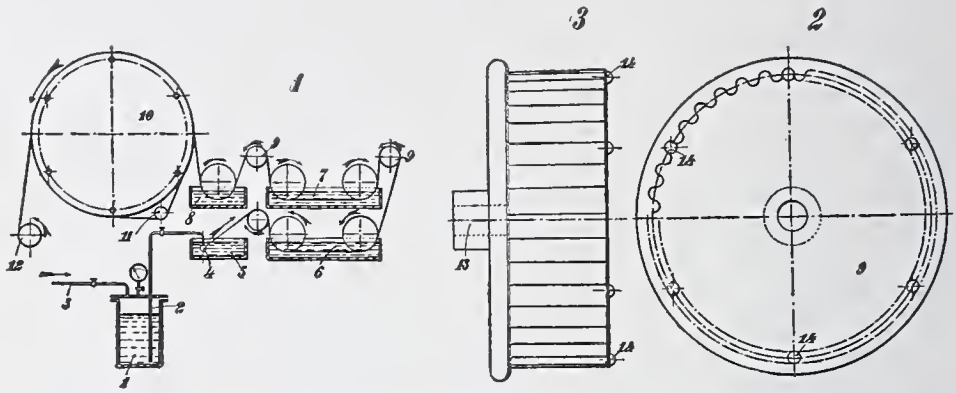

Fig. 321.—The Delubac Viscose Thread Producing Apparatus.

On the manufacturing scale it is advised to store the viscose reservoirs in the basement where the temperature is more constant. From ten to fifteen draw plates are furnished from each reservoir, it being thus possible to give the whole of the viscose pipes the same form and approximately the same length, the object being to distribute a uniform

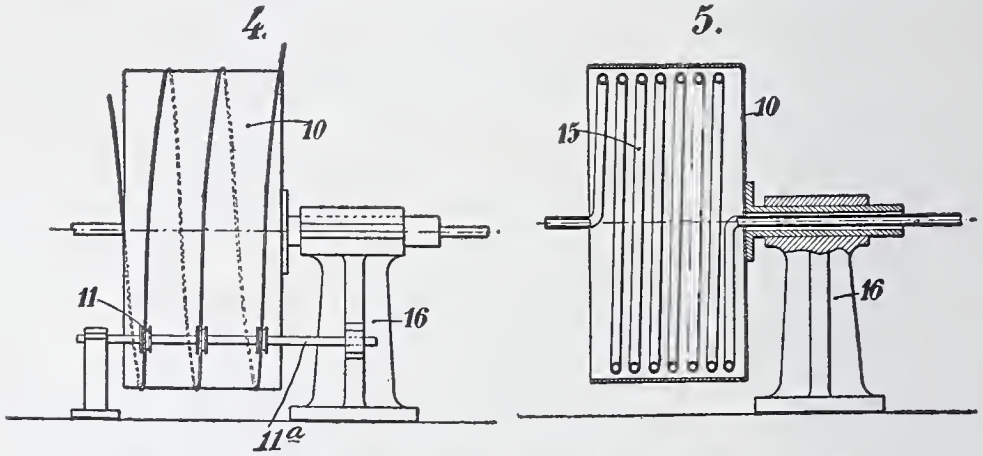

Fig. 322.—The Delubac Viscose Thread Producing Apparatus.

pressure from each reservoir to all the draw plates which are being supplied, that the fineness of the thread produced may vary within minimum limits. This is possible by making the pressure and frictional resistance equal. Moreover, it is possible to control in this way the temperature of the viscose solution up to the point where the pipes issue above the floor of the spinning room, which is an advantage

in spinning uniform filaments. In its passage through the different coagulating baths, the thread is supported by power-driven rollers 9, the circumferential speed of which is exactly equal to the speed of the thread, the rollers being fluted to facilitate the detachment of the thread from their surfaces. On leaving the bath 8, the thread passes over driers 10, similar to those used in paper-making. On finally leaving the driers the thread is wound on a bobbin 12, the twisting and skeining being afterward effected by the ordinary means. The twisting of the threads is done after the fixing process, it being claimed that this causes the elementary staples to retain a certain amount of elasticity, more so than fixed spirals produced by twisting threads before the fixing process. This has the result of requiring a less length of thread to weave a given area. By regulating the air pressure on the viscose storage tank, the standard of fineness desired to be spun is obtained automatically.

Viscose filaments have many of the uses indicated for the artificial filaments previously described, and especially in mixed goods, where it comprises the woof, and hence the diminution in tensile strength due to wetting is modified by the presence of other textiles. The mixture of a number of textiles as in Armure, produces a fabric which is not seriously damaged by water. Viscose is employed, usually, in the woof, in goods manufactured for the Orient, where brilliant coloring is admired; for scarfs, skirts, mixed cottons, and less so for upholstery. It has been also employed in taffetas and umbrellas when given a waterproofing coating.

Artificial Viscose Filaments According to Stearn. The tendency of viscose solutions to pass by progressive decomposition through various more or less well-defined stages, has been ascertained by C. Stearn [1] to be of such definite character as to be commercially utilizable in the preparation of artificial filaments. In order to obtain viscose especially adapted to produce these results, Stearn takes 100 lb. cellulose (preferably in the form of whitewood pulp), and covers with an aqueous solution of sodium hydroxide, preferably of 17.7% strength. The pulp is soaked in this solution for about twenty-four hours, after which the excess of alkaline solution is removed by pressure until the moistened stock is found to weigh three times as much as the original dry cellulose. The product is then stored in closed vessels for about forty-eight hours, to permit of thorough permeation of

1. U.S.P. 716778, 1902; Belg. P. 169443, 1903; E.P. 1020, 1021, 1022, 1898; 7023, 1903; D.R.P. 108511, 1898; F.P. 330753, 1903; Can. P. 62831, 1899; Lux. P. 5235, 5236, 1903; Aust. P. 16112, 1904; Sw. P. 19135, 1899; Span. P. 31479, 1903; see also Stearn, Jour. Soc. Dyers, 1903, **19**, 230; C. Süvern, Chem. Zeit., 1902–1903, **2**, 540.

the cellulose by alkali. It is then placed in a closed vessel, 75 parts carbon bisulphide introduced in the usual manner, until the reaction is found to be complete, usually after five hours. It is then exposed to the air for a short time to permit bisulphide vapors to escape. A caustic soda solution consisting of 300 lb. water and 54 lb. sodium hydroxide is then added, and the mass stirred until apparently perfectly homogeneous. The product of double sodium-cellulose-xanthate thus formed is readily soluble in water without decomposition, caustic soda solutions or weak acids. The effect of time upon the solution, is, according to Stearn, to form successively a series of cellulose compounds, which may be expressed as $C_{12}H_{19}O_{10}CS_2Na$, $C_{18}H_{29}O_{15}CS_2Na$, $C_{24}H_{39}O_{20}CS_2Na$, etc., the total of combined cellulose substantially persisting, while the proportions of the other ingredients in combination progressively diminishes. With such decomposition the solubility of the cellulose compound is modified. Thus in what Stearn calls the "second" stage the compound is soluble in water, caustic soda, and weak acids, but brine converts it into a gelatinous mass. In what may be termed the "fourth" stage ($C_{24}H_{39}O_{20}CS_2Na$) it is substantially insoluble in water and the acids above named, but remains soluble in a caustic soda solution of proper strength. By the neutralization of this excess of caustic soda the material can be readily precipitated in a gelatinous mass. This precipitating action need not be accompanied by the complete dissociation of the cellulose from its combination as the immediate result of the changed physical condition, as some of the xanthate may still remain in the mass.

The inventor takes advantage of the situations just described to obtain the material in the most desirable conditions for the formation of filaments and their subsequent completion as finished thread and proceeds as follows: The viscose maintained in solution in the presence of an excess of caustic soda is stored in closed vessels to permit its progressive decomposition under control. The rate of decomposition depends upon both time and temperature, it being generally true that with higher temperature a shorter time will be required to attain any given stage; but as other and undesirable results might follow from an exposure to an excessively high temperature, it is expedient to maintain what may be termed "normal" conditions at a temperature of, say, 15°. Under these circumstances after about seven days of aging the decomposition will have progressed until the resulting compound has attained substantially the fourth stage above designated, ($C_{24}H_{39}O_{20}CS_2Na$) the viscose still remaining in dissolved form in a solution containing an excess of caustic soda uncombined with the cellulose itself. Stearn claims that in substantially this stage the

viscose is in the most desirable condition for the formation of filaments, since it passes into a gelatinous condition with great readiness by the use of a comparatively mild precipitating solution, which does not injuriously affect the tenacity or other characteristics of the filament. The precipitation or gelatinization is effected by neutralizing the caustic soda solution which has enabled the viscose to be maintained in a dissolved condition.

In the formation of filaments the viscose solution is projected in the usual manner through one or more orifices into the setting solution and then subjected to such further mechanical treatment as is necessary to produce thread of the desired dimensions as described in Chapter XIII.

One peculiar advantage claimed of the preliminary treatment just described is that the precipitating action may be quickly effected to the extent necessary for the formation of a filament without requiring the actual decomposition of the xanthate itself, whereby such decomposition and the consequent conversion of the material into its ultimate form may be deferred until a later stage, if desired. It is expedient to dilute the spinning solution until the combined cellulose therein constitutes about 6% of the total amount, the dilution being effected by adding a solution of caustic soda containing about 8% of the alkali. After the filament has been formed in its gelatinized condition and united with others into a composite strand the decomposition of the viscose is effected, preferably, by the action of heat, which may be conveniently accomplished by exposure for about one hour to steam at a temperature of about 100°. The thread may then be washed in water and dried under strain, if a luster is desired, or may be dyed or otherwise treated.

In a subsequent patent[1] Stearn and F. Woodley have patented the use as setting or coagulating solutions of 9% aqueous sulphuric acid, or 7% aqueous hydrochloric acid, or 10–20% aqueous acetic acid or a solution of aluminum or chromium sulphate. The viscose may be purified: (1) by treating with saturated brine or a solution of an ammonium compound, and washing with dilute brine until free from alkaline by-products; or (2) by treatment with a weak acid, such as acetic acid, followed if necessary by the addition of brine and washing.

Viscelline and Licella Yarn. When viscose was first patented in 1892, the main object which the inventors had in view, or at least one of them, was the coating of thread with the product. Thread so coated was later given the distinctive name of "Viscelline yarn," and intended as an imitation horse-hair. According to the method

1. U.S.P. 725016, 1903; E.P. 2529, 1902; Can. P. 83099, 1903.

of C. Waite [1] a suitable fiber, as cotton thread, is passed through a bath of viscose, preferably in the unaged condition, the time of immersion in the viscose bath being only sufficient for the deposition of an exceedingly thin coating. After the coating is thoroughly worked in so as to insure as far as possible the filling of all the interstices in the thread, the coating is dried, preferably by artificial heat. This treatment is continued until a sufficient number of coats have been applied to give the desired weight, the surface of the final coat being redissolved by immersion in water, when the coated fiber is passed into a setting bath of ammonium chloride or other viscose-reverting agent. After reversion the coated fiber is washed and dried. A waterproof material is then applied to the surface of the coated thread, preferably a petroleum oil, to decrease the friction and increase flexibility. The process may be modified by applying aged viscose for the final coat instead of the water-soluble and unaged modification, in which case it is not necessary to redissolve the surface of the final coat by water before reversion, but the coated fiber may be immediately passed into the setting bath before the final coat is dried. If the aged viscose is used for all the coatings, each coat should be dried before the application of the next one. The final coat in this instance is not dried but immediately immersed in the setting-bath, reverted, washed, dried, and varnished as above stated.

According to the Chemiker Zeitung [2] the Suddeutschen Jutefabrik are employing the patents of the Patent Spinnerei Aktien-Gesellschaft for making "Licella" yarn from wood cellulose by making paper in the usual manner, except that narrow strips are formed instead of wide sheets which are twisted and woven while damp, into yarn and fabrics of fair strength. Thus it will be seen that both viscelline and licella yarns consist of cellulose, the former a regenerated form, the latter the original product in nature, viscelline containing a cotton cellulose interior, and licella consisting entirely of unaltered cellulose.

Bleaching of Viscose Silk. The coagulated filaments of viscose are usually of a light straw-yellow color, or if practically white, have a tendency to turn yellow in the air and light. It is customary therefore to bleach the filaments, a bleaching powder solution being more often used. The process of C. Ernst [3] is representative, and consists in first soaking the unbleached viscose silk in water to remove whatever foreign matter there may be adhering to the surface and for the purpose of softening to a slight degree the viscose filaments, the artificial

1. U.S.P. 689336, 1901; 759332, 1904; 791385, 791386, 1905.
2. 1906, **30**, 1158.
3. U.S.P. 805456, 1905; treatment with sodium acid sulphite as described under U.S.P. 792888, also acts as an effective bleaching agent.

silk is then steeped for one or two hours in a 5% neutral solution of a soluble oil, such as turkey-red oil, the temperature of which is maintained at substantially 40°. The artificial silk is then removed from the oil-bath and washed in water to remove the oil. By this treatment it is claimed that the oil has a definite dissolving action upon the impurities composed of residual sulphur compounds arising from the process by which the artificial silk is produced, and that the silk at this step of the process is very much lighter in color and clearer than it was before it was immersed in the oil, thus showing that some of the impurities have been removed as a result of the continued action of the soluble oil. After this the silk is removed from the oil-bath, and after the oil has been washed off in two warm waters the silk is passed into the bleaching solution proper, which is composed of a solution of sodium hypochlorite. This bleaching solution removes whatever coloring matter remains in the silk and in a comparatively short time, although if a longer treatment is desired the solution may be made weaker.

Dyeing of Viscose does not essentially differ from that of mercerized cellulose or the cellulose regenerated from cuproammoniacal solutions, as described in Chapter XIII. In the use of the basic dyes, the material is mordanted by handling from two to three hours at 122° F. in a bath containing 2–5% of tannin and 1% of hydrochloric acid. The material is then taken out and extracted, and handled for twenty minutes in a fresh cold bath containing from 1–2½% of tartar emetic, and then rinsed. In dyeing, the material is handled for a short time in a cold bath containing from 5–10% of acetic acid. The dyestuff is then added gradually to the bath through a sieve and the liquor heated to 140° F. For bright shades on viscose silk, mordanting can be omitted. Chardonnet silk is colored with the basic dyes without previous mordanting. The material is saturated in a cold dye-bath containing 5–10% muriatic acid. After turning the silk for a while, the solution of the dyestuff is gradually added to the liquor and then heated to 140°F. Sulphur dyestuffs are especially applicable to viscose because the sodium sulphide used in the dye-bath removes during the dyeing process, the sulphur contained in the viscose, which otherwise would have to be removed by a separate operation.

Preparation of Viscose in the Form of a Dry Powder, which is stable in the dry condition, may, according to H. Lyncke,[1] be accomplished by treating alkali cellulose mixed with carbon bisulphide with alcohol instead of water. The mass is treated with alcohol (about

1. E.P. 8023, 1908; F.P. 388915, 1908. See E. Kayser, Zeit. Farb. u. Text. Chem., 1902, **1**, 575; C. Kurz, Ibid., 1902, **1**, 46.

three times the weight of the cellulose), in a kneading machine, until the alkali cellulose xanthogenate is dehydrated and converted into small granules. These may be treated again with alcohol for further purification, or they may be dried direct. Drying is effected rapidly at a temperature not exceeding 70–80°, and dried product may be ground to a fine powder. This powder remains soluble in water or dilute alkali for a fairly long time. If desired, a little acetic or other feeble acid may be added to the alcohol used for purification.

In the method of L. Lilienfeld [1] cellulose derivatives which are stable in the dry condition and are soluble in dilute alkalis, ammonia, or even in warm water, are prepared by treating crude or purified viscose, or one of its derivatives, with an oxidizing agent, such as a permanganate or manganate, and precipitating the product. For instance, 10 k. of a solution of the zinc salt of viscose in soda lye of 3–15% strength, containing 300–600 gm. of cellulose, are mixed with successive portions of a solution containing 50–180 gm. of potassium permanganate in 2–3 l. of water. The mixture thickens at first, but on continued agitation becomes mobile. After standing for some hours, the manganese oxides are filtered off and the cellulose compound precipitated by an acid; or else, the whole mixture is precipitated by acid and the manganese oxides removed by sulphurous acid. The precipitated compound is finally washed and dried; it is then soluble in a 2% sodium hydroxide solution. The solution of the sodium or ammonium compound may be dried, so as to give a product soluble in water, or insoluble metallic compounds may be obtained by precipitation with a zinc or copper salt.

Viscose in Sheets, may, according to the process of C. Stearn,[2] be prepared by taking the viscose after it has been filtered and the air bubbles removed by the air pump. To form a film or sheet the solution is squirted under pressure through a slit into a precipitating or setting solution such as alcohol, brine, ammonium sulphate, or preferably ammonium chloride, or projected from a slit upon a cylinder or endless band which carries it through the solution. The thickness of the film may be varied by a change in the speed of the conveying-band. The material is allowed to remain in cold ammonium chloride solution to remove soluble matters, and is then introduced for a few moments into a boiling solution of the same salt. The subsequent operations comprise immersion in a hot solution of sodium carbonate, bleaching with sodium hypochlorite, washing, treating with acid, washing again, and drying under tension in a hot chamber.

In order to obviate the appearance of efflorescence on the sheets,

1. E.P. 2998, 1907; 8708, 1908. 2. E.P. 1022, 1898.

which greatly impairs their appearance and which is due to incomplete removal of water-soluble salts formed in the various reactions, C. Waite[1] admixes with the viscose a strong solution of sodium silicate. The latter of preferably sp.gr. 1.37, is incorporated directly with the viscose solution, from 50–75% of silicate solution being used to the weight of cellulose contained in the viscose. It is claimed that the viscose solution so prepared may be evaporated to dryness without exhibiting any tendency to effloresce or granulate or to form crystals. The silicate also imparts added toughness to the finished product, as well as decreased inflammability.

Viscose Films. Many difficulties have apparently appeared to cause slow progress in the formation of merchantable viscose films suitable for photographic work and other uses. But the cellulose in the regenerated form is used as a dialyzing tube as a septum for bacteriological researches as explained in Chapter XVI, and as a capsule for sealing bottles in the place of vegetable parchment or kid. The use of viscose as a material for bottle capping is an example of the utlization of a property which has been a drawback to usefulness in other fields, i.e., the property of extreme contraction from the hydrated to the regenerated form. The cellulose xanthate in films is used to place over corks in the manner similar to sealing with parchment; on exposure to air the hydrate parts with its water, and as the water of hydration comprises about 85% of its mass, the resultant shrinkage is correspondingly large. In shrinking, the contraction necessarily causes the viscose to adapt itself snugly to all the configurations of the article over which it is stretched, thus automatically forming an air-tight seal.

Manufacture of Photographic Films from Viscose. The two well-known processes are those of J. C. Chorley, and the more recent method of E. Branderberger. The first-named inventor employs a machine similar to that shown in longitudinal sectional elevation in Fig. 323,[2] employing viscose prepared in the usual manner. This solution of suitable strength is contained in a tank or hopper 2, which is placed at a convenient height above the machine and controlled by a tap 3 for regulating the quantity of viscose allowed to fall upon a suitably shaped perforated dropper plate or trough 4, through the perforations in which the viscose passes onto the surface of a heated cylinder 5. These plates regulate the width of the viscose on the cylinder 5, which is heated by means of steam admitted through its hollow axle. The cylinder 5 is inclosed in a casing 7 and slowly rotated by any suitable driving gear (not shown) in the direction indicated by

1. U.S.P. 689337, 1901. 2. E.P. 18697, 1898; U.S.P. 641623, 1900.

the arrows. The viscose delivered through the perforated dropper plate 4 is spread upon the surface of the heated cylinder 5 by means of a doctor blade 8, mounted and arranged so as to be adjusted to and from the cylinder by means of a worm wheel 9 and worm 10^x, turned by a handle. (Not shown.) As the heated cylinder 5 is slowly rotated it carries forward the thin layer of viscose, which is rapidly dried by a current of heated air drawn through the pipe 11 by a fan from a heater traveling in the opposite direction to that in which the cylinder is rotating until finally conducted away through the discharge pipe 12. The layer of viscose, in the form of a continuous sheet, is led off the cylinder 5 around a hollow stripping roller 13, which

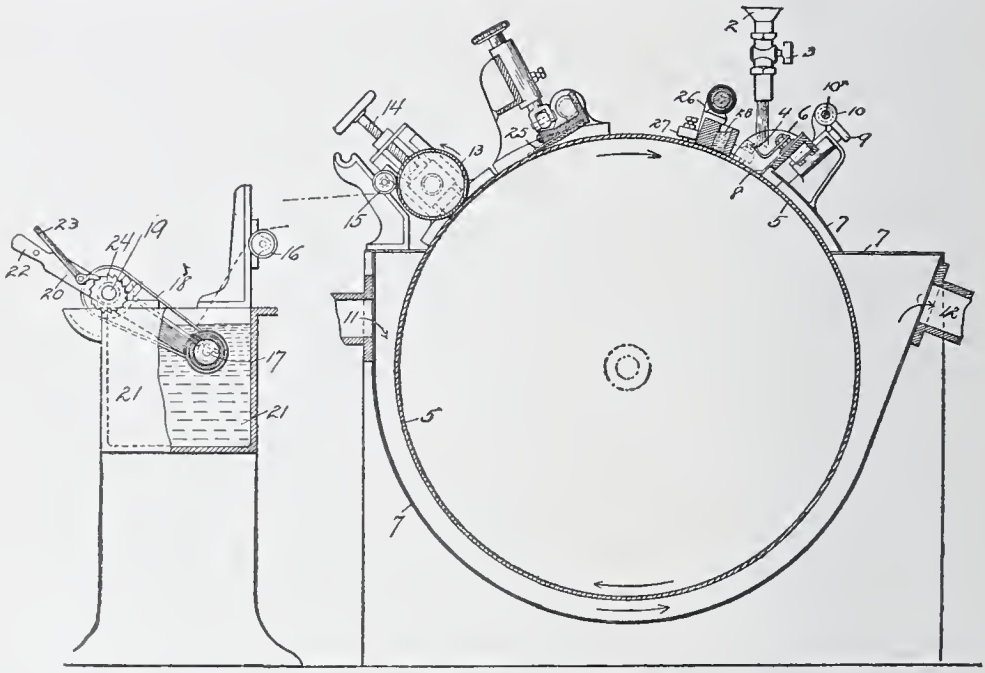

FIG. 323.—Producing Cellulose Photographic Films According to Chorley.

may be cooled. The stripping roller 13, is carried in bearings in slide blocks adjustable by means of screws 14. From the stripping roller 13 the film passes under a guide roller 15 and over a guide roller 16 to a batching roller 17 which is driven by a belt 18 from a shaft 19. Brackets 20, which carry the batching roller 17, are pivoted to the shaft 19, carried in bearings secured to a tank 21, so that the roller 17 can be raised out of the tank by moving a handle 22, cast with one bracket, and the brackets are maintained in position by a pawl 23, which engages with a ratchet wheel 24, secured to the shaft 19. The batching roller 17 is mounted in the tank 21, containing a saturated solution of boiling sodium chloride solution—the object of this being

to decompose the soluble cellulose sulphocarbonate or viscose and regenerate the insoluble cellulose in the film form. The film, now cellulose, when batched is subsequently washed, preferably in an open washing machine, to remove the brine and any by-products from the decomposition of the viscose, and, if desired, may be subsequently treated with bleaching reagents or dyeing solutions, and is finally dried and rolled, into sheets ready for use.

Beyond the stripping roller 13 is mounted an adjustable stripping blade 25, the function of which is to clean the surface of the cylinder by removing any viscose which may remain adhering to it, and behind the blade 25 is mounted a piece of cloth 26, one end of which is secured to a box-bracket 27, and the loose end of this cloth lies on the surface of the cylinder 5. On the top of the cloth and in the box-bracket 27 are placed pieces of paraffin wax 28, or other suitable substance, which slowly meets and passes through the cloth onto the surface of the cylinder, which it covers with a slight waxed surface, and so prevents the viscose adhering too firmly.

In the patented process of E. Brandenberger[1] the machine described is designed to effect the drying of continuous films of cellulose regenerated from aqueous solutions of the xanthate. If such films are allowed to dry freely, the shrinkage and distortion are so great that the products are valueless. Means are therefore provided for applying a moderate pressure to the films in the process of drying, so that they are maintained throughout in intimate contact with the rigid drying cylinders. The machine, which may consist of two or more separate tiers to economize space, contains in each tier a horizontal range of heated drying cylinders which are driven by suitable gearing. Above each range of driven cylinders is a similar range of cylinders, which are not driven independently, but rest freely with their own weight, each one in contact with a pair of consecutive driven cylinders of the lower range, and rotated by these only as the result of such contact. The film passes alternately round a driven and a free cylinder, and on each cylinder it receives pressure at the two lines of contact, so that shrinkage takes place regularly and without distortion. The whole apparatus is inclosed in a casing through which heated air may be circulated. The same apparatus serves for the application and drying of the films on a flexible support, such as paper, passing through at the same time.[2]

1. E.P. 15281, 1909; 13328, 1909; abst. J.S.C.I., 1910, **29**, 17.

2. In E.P. 24809, 1908, Brandenberger describes films of cellulose, obtained preferably from the xanthogenate, which are embossed or decorated in various ways. The films themselves, in the course of their formation, may be made transparent, opaque, colored, metallized, etc. The finished films may be printed or embossed

Viscoid Masses. As has been pointed out in the development of the various arts enumerated in the preceding pages in which the xanthates have found application, viscose is seldom used by itself except for the preparation of artificial filaments. The distinction being that viscose is soluble, whereas viscoid is insoluble and contains practically no sulphur in combination; the latter finds use in the arts in masses due to its insolubility and permanency to atmospheric influences. In forming large aggregates of viscoid, the change from viscose is preferably conducted gradually in order that air bubbles may be eliminated and distortion be reduced to the minimum. In order to judge of the air-dry weight of a given viscose mass, the total solids must be previously determined experimentally, from which data can be computed the volume of viscose required to produce a viscoid mass of desired weight and dimensions. In producing thicker plates from viscose, the following method, although slow, has been found satisfactory. The desired depth of viscose solution corresponding to the final weight of viscoid required is placed in a receptacle at ordinary temperatures, dust excluded as much as possible, and artificial heat usually dispensed with, the first action noted being a uniform contraction whereby the coagulum first formed pulls itself from the sides of the container, the mass becoming firmer as jellification proceeds. As soon as the mass has become firm enough to handle without danger of breaking, it is removed to a porous receptacle, usually a metal dish with numbers of perforations at the sides and bottom, whereby evaporation is more uniform and speedy. The most advantageous temperature is stated to be 35–40°. Coagulation and evaporation is continued until the mass has acquired the desired consistency, the moisture and carbon bisulphide vapors evolved being preferably led away by means of exhaust fans. When the mass has sufficiently solidified, the congeal-

in decorative designs, and the embossed reliefs may be padded with appropriate composition (mastic), with or without an external support. Or the supports themselves may be decorated, and the dry or moist films attached by means of adhesives, and the product embossed, its hollows being filled with a plastic or rigid material to which a second support is then applied. Suitable supports are paper, cardboard, textiles, leather, wood, foliated metals, etc. In E.P. 15190, 1909, Brandenberger describes an apparatus for the manufacture of cellulose films in continuous form from viscose, which consists of a hopper, containing the viscose, and provided with an adjustable slit. The viscose is delivered through this slit on to a roller revolving in a coagulating medium, e.g., a solution of ammonium sulphate. From this roller the film is led and supported over a number of rollers revolving in a series of vats containing solutions of brine, to remove the alkaline and sulphide by-products from the film, solutions of mineral acids, to decompose the xanthate and render the film insoluble, and finally through a series of washing vats, after which the film is reeled up. In the earlier vats of the series, all the rollers are driven by suitable gearing and are placed very close together, but without actual contact, in order to support the film while it is still plastic, but the rollers in the vats later on in the series are simple guide rolls, over which the film is led in a zigzag direction through the various liquids in the vats.

ing is completed by exposure of the cake to the temperature of boiling water until it does not decrease in weight. The salts present are then removed by dialysis, the (now) insoluble cake being placed in water until no more salts appear in solution. As viscose is a poor conductor of heat and electricity, the final heating at 100° must be continued until the mass when placed in warm water does not swell up or soften. When all the salts have dialyzed out, the mass upon drying, appears translucent, homogeneous, firm and elastic. If opaque spots are discernible in the mass, it indicates either the presence of entangled air bubbles or too high a temperature was used in the drying process. These blocks when properly prepared, may be cut, turned and formed into any form or shape and find an indicated sale for knife handles, toilet articles, the handles of tools, electric resistance material, trunk, suit case and hand-bag exteriors, where rigidity and strength are the essential requisites. By incorporating with viscoid indifferent bodies as fillers—sawdust, chalk, barytes, etc.—the composition may be materially cheapened and still find use in arts where the cost of production enables successful competition. Any body chemically compatible with viscoid is a suitable material to incorporate with it in the preparation of new and useful materials. For the formation of white masses, chalk, magnesia, magnesium oxide, zinc oxide or sulphide, lead carbonate and similar pigments are useful, while soapstone powder, asbestos and barium sulphate produce masses of difficult inflammability. Knife handles may be prepared by incorporating magnesium carbonate with the viscose, to which lampblack is added if the handles are to be black. Viscose masses may be colored any desired tint by introducing the substantive or water-soluble dyestuffs into the aqueous solution of viscose before the commencement of the reversion process, it being remembered, however, that as the mass contracts to one-third to one-fourth it original volume in drying, the original amount of dyestuff introduced must be calculated accordingly, or the finished viscoid will be of too dense a shade. In producing viscoid masses on a large scale, the mixing and kneading apparatus described in Chapter IX, and under Smokeless Powder in Chapter XVIII, is serviceable, being of the same general nature as paint and bread mixers. The types used for smokeless powder gelatinization are preferable, on account of the tightness with which the cover may be fastened down, thus reducing to a minimum the escape of the poisonous carbon bisulphide vapors into the atmosphere. The luster of any viscoid mass or article formed therefrom may be increased by immersing the finished product in a 10% viscose solution, afterward reverting to the insoluble form by means of 100° heat. When

the articles are to be painted—dolls' heads for instance—the colors are applied to the finished article, and to render the colors permanent, immersion (preferably) in a pyroxylin lacquer, followed by drying, is often resorted to. Such articles may then be cleansed by soap and warm water without affecting the permanency of the tints. As viscoid masses filled with mechanical wood pulp and other difficultly affected material, prove very resistant to atmospheric influences, including alternate freezing and thawing, they are well adapted for building purposes. In the formation of moldings, cornices and other intricate exterior or interior ornamental work, it is claimed that figures made from these masses possess practically the permanence of the hard woods, especially when properly protected by paint and varnish. By introducing small amounts of camphor, naphthalin, salicylic or benzoic acids or similar insecticides, the materials formed are also insect and vermin proof as well. Busts, statuettes, relief figures and ceramic ware, are fields of usefulness in which these combinations are indicated.

In the process as described by M. Olivier,[1] the large amount of moisture usually present in the viscose at the commencement of reversion, the elimination of which necessitates the gradual shrinkage of the formed coagulum, may be obviated by proceeding as follows: The alkali-cellulose is treated in the usual manner with carbon bisulphide, the xanthate thus obtained allowed to mature for a day or two at the ordinary temperature, after which it is, without the addition of any water, ground for about half an hour in the cold between cylinders until the granular mass has become perfectly homogeneous in appearance. It is then removed from the cylinders and allowed to stand for about twenty-four hours, the xanthate thus obtained being soluble and not coagulated. It is then passed through a helicoidal sausage-machine, in which it is compressed to a homogeneous mass. This compressed material upon issuing from the machine is received into tubes, molds or other forms in which the cellulose is fixed and regenerated, the final process being drying, still under pressure, for a period of twenty-four to thirty-six hours at 30°. The material thus obtained is stated to "possess absolute homogeneity, uniform density, without holes or other blemishes, and can be molded into a perfect finished product."

P. Defaucamberge[2] combines the physical properties of elasticity, tenacity and non-conductivity for electricity found in Para rubber

1. U.S.P. 826351, 1906. Viscolith is a name sometimes applied to viscoid aggregates.

2. U.S.P. 943658, 1909. See M. Olivier and E. Thomas, "La Viscose," Paris, 1900; J. Bonavita, La Nature, 1900, p. 250.

and viscose, not by combining rubber and viscose with benzine or carbon bisulphide, in which the latter is insoluble, but by mixing directly the india-rubber as it first exudes from the tree (so-called latex) as the solvent for Para rubber and viscose. He claims that the viscose and latex form a mixture which can be kept long enough without alteration to allow the different operations of manufacture to take place. The viscose used is prepared in the usual way.

In the process of L. Collardon [1] plastic viscose masses result upon mixing wood-meal, cork, hair, etc., with an acid or neutral solution of viscose, together with a certain proportion of adhesive as starch or glue, the elasticity of the product being modified by the addition of acetin, glycerol, turkey-red oil, or similar substances.

Manufacture of Hollow Articles from Viscose, according to the method of E. Thomas and J. Bonavita,[2] consists in shaping a mass of viscose while in the gelatinous condition after washing with brine, into a hemispherical form, the circular disk of viscose being then clamped onto a sheet of caoutchouc, which is then distended with the film by the application of fluid pressure underneath. The film assumes a hemispherical form with a flange, and in this state it is rendered insoluble in water, and placed upon a suitable mold, on which it dries and shrinks. Two such hemispherical films, cemented together, constitutes the ball or other hollow article.

Electric Lamp Filaments from Viscose. According to the patented process of C. Stearn [3] carbon filaments for incandescent electric lamps may be prepared from viscose by projecting the solution in the usual manner into a setting liquid, Stearn preferring for this purpose aqueous ammonium chloride. The method is illustrated in Fig. 324, the jet orifice a at the end of the receptacle A containing the viscose solution; a^2 represents the hydraulic or other pressure applied to force the prepared solution out of the jet into the precipitating bath. It may be rewound in another setting bath C, but experience has shown that for making lamp filaments it is better not to drag on the material by rollers, but to allow it to be deposited by its own weight. For subsequent treatment, see U.S.P. 532468.

Sizing Paper with Viscose. An alkali cellulose adapted to the use of papermakers [4] has approximately the following composition:

1. F.P. 372584, 1906; U.S.P. 953319, 1910; abst. J.S.C.I., 1907, **26**, 539.
2. E.P. 11663, 11664, 1900. See also Thomas & Provost, D.R.P. 129883, 1900.
3. E.P. 1020, 1021, 1022, 1898; U.S.P. 622087, 1899.
4. According to C. Beadle, C.N., Sep. 14, 1906, Reprinted Chem. Eng., 1906, **5**, 9; see C.N., 1897, **75**, 74; Jour. Frank. Inst., 1894, **138**, 100; 1897, **143**, 1; Jour. Soc. Dyers and Col., 1906, **22**, 381; C. Levy, Annuario Società Chimica Milano, 1905, **10**, 233; Haber, Dingl., Poly., 1894, **294**, 210; C.N., 1906, 127. See also Farledter, Papier Ztg., 1897, **22**, 3396.

cellulose 25, alkali (NaOH) 15%, and water 60%, prepared in the usual manner. As the regenerated cellulose is essentially of the same composition as paper substance itself, the use of viscose as a sizing agent has been very effective and has been widely adopted in the manufacture of paper, being equally applicable in the coarser brown paper or straw board, the viscose being used in an unpurified or partially purified state, or as a size in the finer grades of white paper in which the purified product is necessary.

Although soda-viscose is the least expensive form and may be used directly as a size, it is seldom, if ever, employed on account of the time and difficulty required to remove the soluble sodium salts from the paper substance before use. Combinations of viscose with

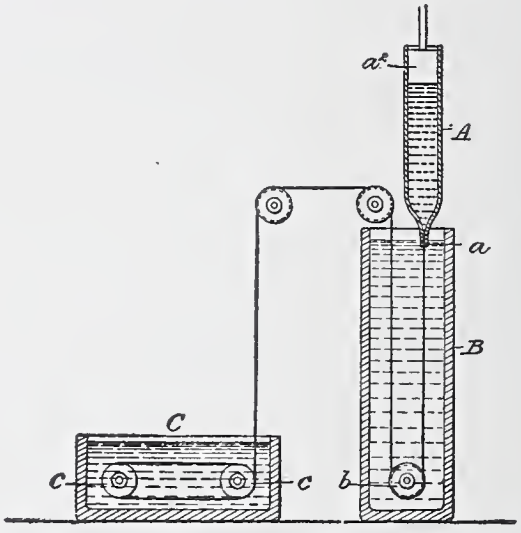

FIG. 324.—The Stearn Filament Apparatus for Incandescent Electric Lamps.

ammonium, magnesium and zinc are more frequently used for this purpose, at present mainly because they decompose more readily and rapidly than soda-cellulose. Ammonium-viscose and magnesium-viscose in decomposing yield products readily soluble in water and which may, therefore, be easily eliminated from the paper substance, while with zinc-viscose and soda-viscose less carbon bisulphide and hydrogen sulphide separates.

While the viscosity of a viscose solution may be lowered by the direct addition of caustic soda, this is not to be recommended for paper or cloth sizing. The viscosity of the solution rather than its percentage composition of cellulose is the important factor in strengthening and hardening paper, it being remembered that the higher the viscosity the greater the tensile strength imparted to the paper.[1] "Ropiness"

1. If given two solutions of equal strength (say 10%) one to be prepared to be

due to untreated or partially treated cellulose must be distinguished from "viscosity of solution," the latter of which is not removable by filtration.

As C. Beadle has stated, viscose has the "property of coagulating or becoming insoluble. The solution in time hardens to a jelly, forming again insoluble cellulose, but in a hydrated condition. If, however, the solution is extremely dilute, as it is in an ordinary papermakers' beater, and agitation is going on at the same time as coagulation is taking place, instead of homogeneous jelly being formed, a flocculent precipitate of cellulose is produced, which in contact with the pulp on the paper machine can be made to agglomerate into one continuous mass, and give strength to the paper by glueing the fibers together. The art of viscose sizing is to bring this change about so as to give the maximum benefit to the paper. It is advisable to use the viscose solution within a short period of the time of manufacture; it will not keep indefinitely, and for this reason it should be by preference made in the paper mill where it is to be used. The effect produced is not unlike that due to prolonged beating with dull hackle, whereby some of the fiber is munched up into a gelatinous mass of hydrate, which has the power of acting as an adhesive, and glues the fibers together when made into pulp.

"When a dilute solution of viscose is added to the papermaker's beater precipitation does not take place quickly, particularly with freshly made viscose. It is necessary, therefore, to add some substance which will bring about the precipitation of the cellulose, but in such a manner as to preserve its flocculent sticky condition. Ordinary mineral acids will precipitate it at once, but destroy its good qualities; alum, also, is too acid a substance, and in a measure has the same effect as mineral acids. Something is needed to precipitate the cellulose in a more gentle fashion; this can be accomplished by the addition of magnesium sulphate or zinc sulphate. These salts decompose

very viscous and the other quite limpid, it is quite possible for the former to possess five times the strength-giving effect of the latter. It would be necessary, therefore, to use five of the latter to one of the former to produce the same result. The object, therefore, in preparing viscose for use as a paper size is to do so in such a way as to produce the maximum tensile strength and hardening effect with the use of the minimum quantity of viscose for the sake of economy. This variation in viscosity with equal weight of cellulose is analogous to the great variation in fluidity of solutions of the cellulose nitrates containing equal weights of pyroxylin dissolved in the same amount of a given solvent.

In the case of prolonged beating of paper pulp in the Hollanders, the cellulose is more or less hydrated, and a certain amount of cellulose transformed which acts as an adhesive causing the paper formed to possess greater strength and hardness. In the case of viscose sizing, instead of affecting the fibers themselves, the cellulose hydrate is added and precipitated, giving to the pulp somewhat the same properties as continued beating on pulp alone would produce.

the soluble compound, leaving the cellulose suspended in contact with the fibers and the pulp neutral."

From laboratory and manufacturing trials made with viscose upon various paper stock combinations, with and without rosin or alum, increased tensile strength of viscose-sized paper over that of rosin-sized of 36%, and over waterleaf paper of 55% were noted. As a result of extensive practical experience in this field, Beadle has arrived at the following definite conclusions: "First of all, the maximum strength for 1% of added cellulose in the form of viscose is imparted to the paper when viscose of the maximum viscosity is used. The maximum effect for each 1% of cellulose is obtained when small amounts are added (i.e., 1% or less); thus 2% would not exert double the effect upon the paper that 1% does, nor would 4% exert double the effect upon the paper that 2% does.

"There appears, furthermore, to be a limit to an increase of strength due to the addition of viscose; for example, a point may be reached in one paper on the addition of 5% of cellulose, and in another on the addition of 10% beyond which the additions of further quantities of cellulose as viscose would give no increase of strength."

Experiments made by the Versuchsanstalt of Charlottenburg on the effect of viscose as a size for various grades of paper, is shown by the appended results:

Variety of Paper.	Breaking Length in Meters.	Elongation in Per Cent.
Brown wrapping paper from steamed wood	3575	1.80
Same, sized with 4% of viscose	4750	3.00
Brown wrapping paper from steamed wood	3200	0.90
Same, sized with 4% of viscose	4650	2.40
Brown wrapping paper from steamed wood	2225	1.40
Same, sized with 4% of viscose	2925	1.97

Paper sized with viscose is distinguished by a firmer feel and more compact appearance, the elongation being increased as high as 8%[1] in some varieties of paper.[2] In the finer kinds of paper, where a white color is indispensable, the viscose must be carefully purified before use for paper sizing or the paper soon "ages" and acquires a yellowish tinge.

1. And not 30–50% as stated in a certain work in English on the subject.

2. A method of purifying viscose in order to obtain a product especially adapted to sizing high grade papers is, according to F.P. 309548, 1901, possible by treating the crude viscose with acetic, lactic or formic acids, then with a neutral dehydrating agent (brine or alcohol) to precipitate the alkali cellulose xanthate, which is afterward separated from the mother liquor and dissolved in water. This is then used as a size for paper, warps, yarns or dressing fabrics.

In order to produce a viscose suitable as a size on the lightest and most delicate shades of paper, A. Fielding [1] adds a solution of sodium bisulphite to the viscose in the following manner; 6 gal. sodium bisulphite solution of 70° Tw. is mixed with 25 gal. 5% viscose solution, and these quantities added to a beater containing the equivalent of 600 lb. of dry pulp. The bisulphite may be added to the fibrous pulp either before or after the viscose has been put into the beater, the paper being steamed after drying in order to complete the decoloration and fixation of the viscose. Calcium bisulphite and china clay are preferred for filling and finishing textiles.

Viscose as a Paint Material, for wall and decorative painting, may [2] be produced by first purifying viscose as ordinarily prepared by the simultaneous addition to the alkali-cellulose prepared in the usual manner in a vertical mill (edge runners) finely powdered sodium sulphite in the proportion of 25–30% of the weight of the cellulose contained in the alkali cellulose, together with zinc oxide in the proportion of 30%. The grinding is continued until the mixture has become thoroughly homogeneous. After this incorporation of sodium sulphite and zinc oxide the mixture is treated with carbon bisulphide in the ordinary way, the product being dissolved in water to form a 10% solution of cellulose. Various other white and also colored pigments not effected by the alkali may be added for the same purpose, the paint so produced being peculiar in containing no oil, driers or size, and on account of the absence of white lead is unaffected by traces of hydrogen sulphide in the atmosphere. It is said to produce admirable matt and dull surfaces, which after thorough fixation of the cellulose, may be washed with soap. Its utilization as a paint-remover, has been mentioned. While the sodium sulphite and zinc oxide may be added directly to viscose, it is preferable to add it to the alkali-cellulose.[3]

Artificial Leather from Viscose. By varying the composition and thickness of the cloth or other textile base upon which the viscose is to be precipitated or deposited, products from imitations of fine

1. U.S.P. 708760, 708761, 1902; E.P. 20397, 20398, 1901; F.P. 320478, 1902. See also A. Little, Jour. Frank Inst., 1894, **138**, 111; J.S.C.I., 1893, **12**, 498; 1894, **13**, 900; 1895, **14**, 59; Text. Mfr., 1900, **26**, 322; v. Possanner, W. Papierfabr., 1908, 604, 1221; F. Arledter, Papier Ztg., 1897, p. 3396.

2. According to E. Thomas, J. Bonavita and M. Olivier, U.S.P. 646044, 1900; E.P. 9577, 1899; Dan. P. 3258, 1900; D.R.P. 117461, 118554, 125416, 1900; Norw. P. 8958, 1899; Aust. P. 4918, 1901; Swed. P. 11657, 1899; Hung. P. Sep. 22, 1899.

3. See process of J. Branderberger, E.P. 24809, 24811, 1908; J.S.C.I., 1909, **28**, 851, for paper size or paint from regenerated cellulose obtained from viscose. "Fibrol" or "peinture incombustible" is viscose mixed with zinc oxide, barium sulphate or other incombustible pigment. "Deeapant" or "Clysol" is an alkaline viscose paint remover.

leather to heavy sole leather may be produced, in general by the impregnation of a woven cellulose material with a cementing and agglutinating body soluble in water (viscose) afterward rendered insoluble by heat (change to viscoid).

In the preparation of that class of artificial leathers intended for embossing and use in upholstery and book binding, a thin, closely woven cotton fabric is selected, usually a duck or thin drill. The cloth is preferably bleached and scoured before viscose-coated in order to render the fabric as absorbent as possible. It is not necessary to dry the fabric before coating as has been advised, for the viscose, being an aqueous solution, is not antagonistic to the moisture present in the cloth, as is the case where a cellulose nitrate product is to be deposited. The general method of coating is similar to that described in Chapter XI under the " Formation of Pyroxylin Artificial Leather," with the exception that usually both sides of the cloth is impregnated, and by means of passing the cloth in rolls into a bath of viscose, the speed of entering and the length of time of submersion depending on the thickness of the fabric to be coated and the closeness of its weave. After emerging from the viscose tank, the cloth passes through a pair of " squeegee " rolls, which merely presses out the superfluous solution, which then runs back into the tank. A solution of viscose containing the equivalent of about 20% cellulose is as concentrated as it is desirable to use for impregnation, a more highly concentrated solution penetrating with difficulty the fabric substance. This is especially true where " raw " or unscoured cotton cloth is used. The next step after squeezing out the superfluous viscose is regeneration to cellulose, and this is usually done in either one of the following two ways: The damp and impregnated cloth is passed through a steam box where it is subjected to live steam at a temperature of about 85–100°, or passed through hollow calender rolls, which are steam heated. The latter method possesses the advantage of combining pressure at the same time as reversion, so that the finished cloth takes on a smooth and polished appearance.

During the decomposition of the viscose by heat into viscoid, carbon bisulphide and other vapors are disengaged, not only poisonous and highly inflammable, but valuable. By inclosing the calendar rolls in an air-tight box, leading the vapors through a brine or ammonia refrigerating system, a large portion of the carbon bisulphide may be recovered mixed with water, from which it may be readily separated by decantation, the two fluids being immiscible. A factory using this method, to the author's knowledge recovers about 40% of the carbon bisulphide, theoretically disengaged, and this needs no

purification or rectification for reuse other than the mechanical separation of water by gravity. The final step, called "sunning," is exposure of the cloth to contact with series of steel rollers heated to about 60° to remove all traces of bisulphide odor and compact the mass. The rolls may be friction (of varying speeds) in order to produce a glaze or polish, or "equal speed" to merely eliminate traces of solvent.

If the cloth is to be used for "cartridge" and similar wall papers, usually one coating is sufficient, but if designed for upholstery, book covers and other uses to supplant embossed leather, it is customary to first dye the cloth approximately the shade of the finished leather. Water-soluble anilines, together with pigment to render the coating sufficiently opaque so as not to show the fabric weave, is mixed with the cool viscose in the impregnating bath, the contents of which is kept in agitation in order to insure the uniform suspension of the heavier pigment particles. If it is required to economize solution and coat only one side of the fabric, this is possible by arranging a thin metallic slit through which the viscose comes in contact with the cloth, the height of the slit and hence the amount of solution deposited in a unit time, being governed by means of a screw head with micrometer gauge. The speed with which the cloth passes under the solution is also varied with the amount of material it is desired to deposit thereon. Best results with this method have been attained where the preliminary or anchorage coat was deposited by actual immersion of the fabric as first described, subsequent layers being added, until a sufficient plurality of coats have been built up, by depositing on one side only, as just stated. After the final drying the cloth may be embossed by plate or roll or otherwise treated as previously described. (See Chapter XI.)

A microscopic examination of a fabric impregnated as described above will show that the individual cotton filaments are agglutinated together in such a manner that the line of demarcation between each filament is almost indistinguishable, and for practical purposes, forms a continuous mass of elastic, water-repellant cellulose. The natural strength of the cotton filaments has been augmented and their durability enhanced by the complete envelopment and percolation through them of this structureless cement. It has been said that a piece of leather may be torn with greater ease than a piece of fabric of the same thickness impregnated with this regenerated cellulose. The uses of varying thicknesses of cloth thus coated must be many, the preparation of large belting being less expensive, more lasting, and not as readily affected by lubricating oil and "belt dressings," as leather; and as waterproofing for cloth intended for awnings,

tenting and other uses where exposed to the elements; for the canvas portion of two-section razor strops, being more durable and capable of taking on a higher gloss with soap, and a greater ability to produce a " cutting-edge " upon hard steel razors. Used as a material for sails, where, when containing naphthol, and other antiseptics and fungicides, renders possible the preparation of material but little affected by salt water, and not prone to mildew upon storing. Viscose-coated duck cloth is said to be superior to sole leather and other heavy leathers for use in shoes, due to the fact that whereas leather upon becoming wet parts with some of the contained tannin through solution, and upon drying exhibits the tendency to stiffness and proneness to cracking, viscose-coated cloth, being insoluble in water, does not possess these drawbacks.

In the process of L. Naert [1] for producing artificial leather, undressed or dressed and felted fabric is impregnated with viscose as has been described, then fixed by steaming, after which a second treatment is given with a solution of india-rubber *in vacuo*, the final product being rolled. Duvinage [2] prefers to use woolen fabric for the base, and after producing viscoid on the fiber and drying, a second treatment is given with the following mixture; carbon disulphide 1 l., gutta percha 20 gm., caoutchouc 10 gm. and asphalt and dammar, each 5 gm.,

In the more recent method of G. Winterbottom and J. Egerton [3] a fabric or other material is coated with a composition made from viscose incorporated with about 1% of rubber, or with an oil or other similar substance to act as a softening agent, and with mineral matter, such as zinc oxide, and (if desired) a pigment. The material is then steamed or aged, and washed with water to remove soluble impurities.

Viscose for Wall Paper. As a thickening agent for the colors used to produce the design, viscose may be used directly in the manufacture of wall paper, and compared with the usual thickening agents possesses the advantages that colors adhere much more tenaciously, and when the viscose is subsequently transformed into cellulose by heat, the coloring matter can be effaced by rubbing only with difficulty. In the manufacture of so-called flock paper, which is prepared by dusting finely comminuted and dyed wool upon sized spots on the paper viscose is of especial value because the flock cannot be readily removed as is the case when the usual starch and dextrin sizes are used. Metallic bronzes, powdered aluminum, pigments and lakes in impalpable powder, ground with viscose in a paint mill to a thin consistency, may

1. E.P. 17253, 1900; U.S.P. 719787, 1903.
2. F.P. 304143, 1900.
3. E.P. 12687, 1909.

be printed upon paper, the latter steamed, when the bronze or color is firmly fixed. Wall paper which has become dingy by smoke or use may be restored to its original beauty by washing with soap and water, provided it was originally viscose treated. Thus viscose-treated wall paper is especially valuable for the walls of a bathroom or lavatory on account of its sanitary nature and resistance to soap and water.

Imitation of leather and velvet and velour portières and draperies are possible by means of velour on a cotton duck or drill backing. The pattern is printed on in sections with viscose, the colors in wood flock or other fibrous and dyed material being sifted on and brushed off after each impression, until the entire colored pattern results. The cloth is then steamed or otherwise treated to regenerate the cellulose, which produces an entirely insoluble pattern, and hence one which will wear well. Wall paper in relief or with embossed effect may be formed in a similar manner, the regeneration in this instance being best accomplished by passing the paper with the non-printed surface down, over a metal roll heated to 105°, but with sufficient rapidity so that the maximum temperature at one spot is not maintained more than a few seconds.

Cellulose Xanthate as Substitute for Wood and Horn,[1] and obtained by the action of carbon bisulphide on alkali cellulose, is allowed to harden by standing at the ordinary temperature for a day or two, when it is ground between cylinders in the cold for about half an hour until it has become perfectly smooth. After standing for about twenty-four hours the soluble xanthate is passed into a suitable press, where it is compressed into a homogeneous mass, which is introduced into suitable molds, and then "fixed" by keeping it for twenty-four to thirty-six hours, at a temperature of 30°. The product is stated to be quite homogeneous, of even density throughout, and free from cavities. It can be molded to the desired shape and colored or otherwise treated to resemble wood, horn, etc.

Viscose in Cloth Printing. In "calico printing" and the printing of other fabrics, viscose may be used in a number of ways, where the property of formation of cellulose either as a protective agent or as a carrying medium may be made use of. If a woolen or silken fabric be printed upon with a multicolored design by means of a viscose solution of proper strength, and this fabric then be passed over hot rolls to change the viscose into viscoid, the places covered and impregnated with cellulose act as a resist, so that in the subsequent dyeing process, where a dyestuff is used which colors silk and wool, but does not affect cotton, the portions covered with viscoid will

1. Process of Soc. France. de la Viscose, F.P. 351089, 1905.

appear colorless at the finish of the dyeing operation, the cloth showing a colored design upon a colorless (white) background. If, on the other hand, the silk or wool coloring dyestuff be incorporated with the viscose, and the fabric printed with this mixture, passing the fabric over heated rolls will cause the viscose to form into a cellulose, the color then becoming imbedded in an insoluble enveloping layer of cellulose. For marking fabrics in mills and as a marking ink for laundries, viscose containing coloring matter may be printed on the cloth, the latter being then passed over heated rolls for fixing. Finely divided carbon or other pigment used with viscose paste and a rubber stamp gives satisfactory results, although but a small amount of the preparation can be made up at one time on account of its ready reversion into the insoluble cellulose. With laundry, after marking, passing a hot flatiron over the surface suffices to fix the cellulose. The carbon is thus inclosed which has actually penetrated the fibers of the fabric, so that upon application of a cellulose solvent as cuprammonium, but superficial solution ensues, the writing becoming paler but does not lose its distinctness.[1] The[2] difficulties connected with coating or printing with viscose, whether crude, neutralized or purified, have been due to the presence of salts, which have contaminated the finished products. The zinc compound of viscose is insoluble in water and may be washed free from salts, but hitherto it has always been necessary to use an excess of alkali to bring it into solution again, with the result that the same difficulty has presented itself again. According to the present invention, the compound of cellulose xanthogenate with zinc or other metal of the magnesium group, after washing, is very finely pulverized. In this condition it is possible to dissolve the compound merely with the aid of a quantity of alkali exactly equivalent to the zinc or other metal present. The solution so obtained is neutral and contains no excess of saline impurities, so that the coatings or other films or designs produced may be finished by drying alone. These films are apt to be brittle, but are made elastic by the use of soaps or of sulpholeic or other sulphonated fatty acids or their salts, in conjunction with the coating medium, in quantities not less than 20% of the cellulose present.

Fixing Viscose on Textiles. The coating of fabrics with a combination of rubber and viscose[3] advocated in 1896, so far as has been

1. In this connection see E. Noelting, Chem. Ztg., 1902, **26**, 298; C. Kurz, Zeit. Farb. Text-Chem., 1902, **1**, 46; E. Kayser, Ibid., 1902, **1**, 575. For viscose as a mordant, see Fielding, E.P. 20398, 1901.

2. L. Lilienfeld, E.P. 15306, 1909; U.S.P. 960100, 1910.

3. Process of F. H. Smith and C. Macintosh & Co., E.P. 26695, 1896. In the method of C. Weber and A. Cairns, E.P. 50, 1901; D.R.P. 138511, 1901, a coating material is prepared of india-rubber compounded with viscose by forming the

ascertained, has not reached any considerable importance. As a finish for fabrics, A. Fielding takes cellulose which has already been dyed, such as damaged goods, tag ends, or waste pieces of cloth. If the dyestuffs are fast to alkalis, the colored viscose thus produced is employed as a coloring and filling matter, for finishing already dyed fabrics or yarn. The finishing or filling process may be carried out by padding or mangling, and then quickly drying the goods by passing through a heated chamber and through an aging box carrying a steam pressure of about 3 lbs., or a stenter or steam cylinder and an aging box may be employed. In this manner the use of a brine bath for fixing viscose is done away with.[1] The viscose thus fixed can be used as a mordant for aniline and other classes of colors, and also as a decomposing and fixing agent for mordants, such as metallic salts, employed in dyeing, with various dyewoods and alizarin. The goods are finally washed and dried.

Leather cloth may be treated so as to render permanent embossed effects.[2] This is done by treating the cloth with viscose solution either before or after, or both, the embossing operation, and subsequently fixing the viscose (this expression always has to do with the change of viscose into cellulose) by steaming or aging. The process varies slightly, dependent upon the nature and weight of the cloth treated. In some cases the heat of the embossing rollers is sufficient to fix the viscose, and where plate embossers are used, this is usually so.

In the manufacture of artificial leather applicable for boots, shoes, belts, gaiters, upholstery, etc., a fabric,[3] preferably of cotton woven in single or double taffeta, and twilled in any desired way, constitutes the basis of the artificial leather, and is preferably dressed or felted on both sides. A solution of xanthate of cellulose is prepared by soaking rags or cotton waste in a solution of caustic soda, and adding carbon bisulphide. To this solution linseed oil, castor oil, or soap may be added, and the fabric is then impregnated with it *in vacuo*, or the fabric may be heated on a steam-heated plate or drum, and

latter into a plastic emulsion by rolling with a hydrocarbon, blown fatty oil, cholestrol, or a soft resin as pontianac. The viscose is either diluted with water and added directly to the mixture of india-rubber, and worked wet with finely ground zinc sulphate, or the viscose is allowed to gelatinize and then ground together with the india-rubber. See also C. Weber, Gum. Ztg., 1899, **14**, 49; Zeit. ang. Chem., 1899, **12**, 5; J. Wolff, Rev. d. chim. Ind., 1896, p. 251; Gum. Ztg., 1897, **12**, 164; 1903, **29**, 283; Text. Mfr., 1903, **29**, 283; Leip. Farb. Ztg., 1905, **54**, 402.

1. U.S.P. 708761, 1902; E.P. 20396, 1901. The alkali in the viscose is wholly or partially neutralized by means of aqueous potassium bisulphite.

2. A. Fielding, E.P. 9849, 1903; see O. Witt and A. Buntrock, Ding. poly., 1895, **295**, 233; Osterr. Woblen u. Leinen Ind., 1899, p. 11.

3. L. Gevaert-Naert, E.P. 17253, 1900; D.R.P. 127422, 1900.

immersed in the cold cellulose solution. The impregnated fabric may be dried, stretched, and washed, or if only partly dried, the cellulose may be fixed by passing the fabric through a hot concentrated solution of sea-salt, or by placing it in a chamber through which steam is allowed to pass. For the xanthate of cellulose may be substituted a solution of cellulose in cuprammonium chloride or zinc chloride. The washed material is now impregnated with weak solutions of gutta-percha or india-rubber dissolved in benzine or carbon bisulphide. Dammar or other gum may be added to this solution. The process may be carried out by impregnating the fabric with either the cellulose solution or the solution of rubber, etc., alone. The artificial leather is finished by means of rollers, or it may be varnished.

To obtain silky effects [1] materials which possess suitable surfaces, such as textile fabrics and paper, are treated with an emulsion of some waxy, fatty or resinous substance and dried. The surface is then coated with a solution of cellulose obtained from viscose, which may or may not contain pigment in suspension, the material being finally submitted to pressure of an engraved roller, the finish obtained being practically water-resistant. It is also claimed to be unaffected by such gums and pastes as are used in bookbinding.

In J. Sackville's process for manufacturing book-cloth and leather cloth,[2] and other similar materials upon which filling and coloring matter are applied by a padding machine, viscose is first bleached by sodium bisulphite or calcium bisulphite. A solution of about 10 parts bleached viscose to 100 of water is prepared, to which is added zinc oxide, china clay and other similar minerals used in padding in quantity according to the amount of padding to be done, the whole being thoroughly mixed before using. The mixture is padded onto the cloth by means of any suitable machine, applying a final coating of viscose to fix the surplus color, if necessary, after which the padded fabric is run through a steaming box, or through a bath of warm acetic acid, washing with water if necessary, and finally drying,

In the process of J. Ashwell [3] yarn is treated in the moist condition with 15–27% caustic soda solution, shaken out and stretched, at the same time exposing the yarn to carbon bisulphide vapor at 32–50°, until the yarn is superficially xanthated. It is then dried, boiled in brine or Glauber salt solution, to change the cellulose xanthate into cellulose, being finally washed and dried.

1. Oldroyd and Blakeley, First Addition dated April 24, 1907, to F.P. 333835, 1903; J.S.C.I., 1904, **23**, 17.
2. U.S.P. 724616, 1903.
3. E.P. 19912, 1901, the process of H. Akyroyd and P. Krais (Belg. P. 146685, 1899; U.S.P. 657849, 1900; Chem. Ztg., 1900, **24**, 748, 849) is very similar.

J. Subrenat [1] glosses the threads by mechanical means, which have previously been impregnated with cellulose xanthate, and in decomposing the xanthate, a cellulose hydrate becomes precipitated in the interstices of the filaments.

Starch Xanthate. The difficulty at first experienced in attempting to prepare xanthic esters of starch similar to those obtained from cellulose, were apparently only mechanical, and due to imperfect contact between the starch and reagents. C. Cross, E. Bevan and J. Briggs [2] found that this difficulty could be overcome by first saturating the dry powdered starch with carbon bisulphide and then stirring into the mixture the necessary quantity of 20% NaOH, when a homogeneous emulsion of all the reagents is obtained, the starch being completely transformed. At the completion of the reaction the product is distended in water, a viscous suspension of sodium-starch-xanthate being formed.[3] This method of formation has been patented.[4]

Cellulose Nitrites. By treating viscose-silk with nitrous gases, in the presence of nitric acid (sp. gr. about 1.5), P. Nicolardot and G. Chertier have found [5] that a mixture of nitrous and nitric esters of cellulose is produced, from which the former may be separated by means of acetone, in which they are insoluble. The nitrites of cellulose, thus obtained, are generally gray in color, gelatinous when moist and very brittle when dried; they are insoluble in water, alcohol, ether, acetone, chloroform, and ethyl acetate. They lose nitrogen to an appreciable extent at the ordinary temperature, and more quickly on heating, giving yellow, friable, and extremely acid products. Water effects hydrolysis, slowly at the ordinary temperature and completely after twelve hours boiling, and the same occurs in the cold with sulphuric, nitric, and hydrochloric acids, though acetic acid attacks these esters only partially at about 50°; methyl, ethyl, etc.,

1. F.P. 328179, 1902; abst. Zeit. Farb. Text-Ind., 1904, **3**, 113. For critical review of this process see Zeit. Farb. Text-Ind., 1904, **3**, 134.

2. J.C.S., 1907, **91**, 612.

3. It is partially soluble in cold water, reacts with iodine in a similar manner to cellulose xanthate, undergoes hydrolysis in aqueous solution, no starch being detected during this "spontaneous" reversion. It is accompanied, as in the cellulose reaction, by the inevitable yellow by-products, chiefly trisulphocarbonate. The purified product may be obtained by treating with dehydrating agents, such as alcohol. On adding acetic acid the by-products are decomposed, the sodium-starch-xanthate resisting the action of the acid as with the corresponding cellulose compound.

4. Cross and Briggs, E.P. 20638, 1906. E. Kur (D.R.P. 217237, 1908) employs the starch zanthate produced according to F.P. 370505, in aqueous solution as a solvent for sulphine dyes such as immedial, thional, thiogen, katigen, pyrrole dyes to form thick solutions applicable in dyeing, marbling, and printing. The xanthogen esters dissolve sulphur dyes, partly in the cold but better on heating, many being reduced. Further particulars are specified.

5. C.R., 1910, **151**, 719.

alcohols are oxidized by them to aldehydes and even acids. Nitrous esters are liable to occur, under certain conditions in nitrocelluloses prepared from cotton, and cause rapid deterioration; when they are present, lower results are obtained in the determination of nitrogen with the nitrometer than by Schloesing's method, because the nitrites are at once decomposed by sulphuric acid.

Quantitative Determinations. Due primarily to the researches of Cross and Bevan, the following quantitative processes have been indicated, and may be applied with a fair degree of accuracy:

(1) *Cellulose* may be determined by (*a*) evaporating a known amount in a platinum dish, forming cellulose by boiling water in the dish, which at the same time extracts the alkali salts present, decanting the water, evaporating to dryness in the water-bath and weighing. Or (*b*) a known weight of viscose (about 10 gm.) is slowly poured into 250 cc. boiling water with constant stirring, the cellulose filtered off and dried to constant weight. This is a more rapid method than (*a*) and the large volume of water used insures complete elimination of alkali, soluble sulphides, etc.

(2) *Total Alkali* is estimated by any of the usual titration processes, and the by-products in terms of sulphides, poly-sulphides or sulphocarbonates, by the standard methods.[1]

(3) *Cellulose Xanthic Acid* is not attacked by the monocarboxylic acids, as acetic, and its salts are not decomposed by acetic acid. Upon this observation may be based a method of determining the xanthate cellulose and soda from the by-products, which are salts of carbonic and sulphocarbonic acids. For the determination of soda in combination with by-products only, an excess of a known strength of acetic acid is added to a weighed quantity of viscose, and the excess of acidity titrated back with standard alkali. To another weighed

1. According to Cross and Bevan, "A Text Book of Paper Making," 1907, 28, "analyses of viscose have shown that, whereas the proportions of the original reacting groups are:

$$C_{10}H_6O_5—2NaOH—CS_2$$

and represent the minimum quantities of the reagents brought into contact with the cellulose to determine a full conversion of the latter into a water-soluble product, the xanthate obtained is subject to a progressive decomposition or dissociation, and in solution passes through the following stages:

"(*a*) $C_{12}H_{19}O_9OCSS.Na$,—characteristic of viscose twelve to twenty-four hours after preparation; this passes continuously into

"(*b*) $C_{24}H_{39}O_{19}OCSSNa$, which is insoluble in weak saline solutions and therefore represents the condition of the xanthate in the viscose, which has coagulated and set spontaneously. Xanthates more advanced in the dissociation series are insoluble even in pure water, but soluble in solutions of the alkaline hydrates. In addition, therefore, to the acidity due to the configuration XO.CSS, there are OH groups of the cellulose itself, of sufficiently pronounced acid function to combine with an alkaline group to such an extent that the physical properties of the aggregate are modified."

portion, an excess of standard sulphuric acid is added and warmed to about 65°, when the excess of acid is titrated back with standard alkali as before. The alkali obtained from last titration indicates the total alkali present, while the first subtracted from the second represents the "xanthate soda," or the alkali in combination as xanthate with the cellulose.

After acidification with acetic acid, the xanthate being then unaffected, may be estimated by titration with standard iodine solution, the reaction taking place according to the following equation:

$$2CS\langle^{OX}_{SNa} + I_2 = 2NaI + CS.\langle^{OX.XO}_{S\text{——}S}\rangle SC$$

the last compound shown being a cellulose dioxythiocarbonate. The difference in amount of iodine absorbed in oxidizing the decomposed by-products subtracted from the total iodine destroyed, is a measure of the cellulose xanthate originally present in the undecomposed state. This quantity is determined by a parallel experiment, as with the estimation of various combinations of alkali, and carried out under identical conditions, except that the acetic acid is replaced by sulphuric acid in excess.

CHAPTER XXI

DENATURED ETHYL ALCOHOL

The following Rules, Regulations and Instructions for the use of Denatured Alcohol are taken from Regulations No. 30, United States Internal Revenue, July 15, 1907, and Supplement No. 1 thereto, June 3, 1908. The following extracts contain only information concerning the solvents directly concerned with the previously described industries of the cellulose nitrates, and are placed in one volume, it is believed, for the first time. All the accepted denaturant formulas to Feb. 15, 1910, are also included. The sections and numbers refer to the official regulations, and used in correspondence with the Internal Revenue Department, serve for purposes of identification of subject matter.

Part I.—Sec. 13. Not less than one hundred wine gallons of alcohol can be withdrawn or removed at one time for denaturing purposes.

Denaturing Agents—Completely Denatured Alcohol. Sec. 26. Unless otherwise provided, alcohol to be known as completely denatured alcohol will be denatured under either of the following formulas: (1) To every 100 parts by volume of ethyl alcohol of the desired proof (not less than 180°) there shall be added 10 parts by volume of approved methyl alcohol and one-half of 1 part by volume of approved benzine; for example, to every 100 gal. of ethyl alcohol (of not less than 180° proof) there shall be added 10 gal. of approved methyl alcohol and ½ gal. of approved benzine. (2) To every 100 parts by volume of ethyl alcohol of the desired proof (not less than 180°) there shall be added 2 parts by volume of approved methyl alcohol and one-half of one part volume of approved pyridin bases; for example, to every 100 gal. of ethyl alcohol (of not less than 180° proof) there shall be added 2 gal. of approved methyl alcohol and ½ gal. of approved pyridin bases. Alcohol thus denatured shall be classed as completely denatured alcohol.

Methyl alcohol, benzine, and pyridin intended for use as denaturants must be submitted for chemical test and must conform to the following specifications:

Methyl Alcohol. The methyl alcohol submitted must be partially purified wood alcohol obtained by the destructive distillation of wood. It must conform to the following analytical requirements:

1. *Color.* This shall not be darker than that produced by a freshly prepared solution of 2 cc. of N/10 iodine diluted to 1,000 cc. with distilled water.

2. *Specific Gravity.* It must have a specific gravity of not more than 0.830 at 60° F. (15.56° C.), corresponding to 91° of Tralles' scale.

3. *Boiling-point.* One hundred cc. slowly heated in a flask under conditions as described below must give a distillate of not less than 90 cc. at a temperature not exceeding 75° C. at the normal pressure of the barometer (760 mm.).

One hundred cc. of wood spirit are run into a short-necked copper flask of about 180–200 cc. capacity and the flask placed on an asbestos plate having a circular opening of 30 mm. diameter. In the neck of this flask is fitted a fractionating tube 12 mm. wide and 170 mm. long, with a bulb just 1 cm. below the side tube, which is connected with a Liebig's condenser having a water jacket not less than 400 mm. long. In the upper opening of the fractionating tube is placed a standardized thermometer, so adjusted that its mercury bulb comes in the center of the bulb. The distillation is conducted in such a manner that 5 cc. pass over in one minute. The distillate is run into a graduated cylinder, and when the temperature of 75° C. has been reached at the normal barometric pressure of 760 mm. at least 90 cc. shall have been collected.

Should the barometer vary from 760 mm. during the distillation, 1° C. shall be allowed for every variation of 30 mm. For example, at 770 mm. 90 cc. should have distilled at 75.3° C., and at 750 mm. 90 cc. should have distilled at 74.7° C.

4. *Miscibility with Water.* It must give a clear or only slightly opalescent solution when mixed with twice its volume of water.

5. *Acetone Content.* It must contain not more than 25 or less than 15 gm. per 100 cc. of acetone and other substances estimated as acetone when tested by the following method (Messinger):

One cc. of a mixture of 10 cc. wood alcohol with 90 cc. of water is treated with 10 cc. of double normal soda solution. Then 50 cc. of N/10 iodine solution are added while shaking, and the mixture made acid with dilute sulphuric acid three minutes after the addition of the iodine. The excess of iodine is titrated back with N/10 sodium thiosulphate solution, using a few drops of starch solution for an indicator. From 15.5 to 25.8 cc. of N/10 iodine solution should be used by the spirit.

The solution should be kept at a temperature between 15° and 20° C.

Calculation: X = grams of acetone in 100 cc. of spirit;
Y = number of cc. of N/10 iodine solution required;
N = volume of spirit taken for titration.

Then, $$X = \frac{Y \times 0.096672}{N}.$$

6. *Esters.* It should contain not more than 5 gm. of esters per 100 cc. of spirit, calculated as methyl acetate and determined as follows:

Five cc. of wood spirit are run into a flask and 10 cc. normal sodium hydroxide free from carbonates are added, and the flask connected with a return condenser and boiled for two hours. Instead of digesting at boiling temperature the flasks may be allowed to stand overnight at room temperature and then heated on a steam bath for thirty minutes with an ordinary tube condenser. The liquid after digestion is cooled and titrated with normal sulphuric acid, using phenolphthalein as an indicator.

$$\left.\begin{array}{c}\text{Methyl acetate, =} \\ \text{grams per 100 cc. of spirit}\end{array}\right\} = \frac{.074 \times \text{cc. of N/ soda required} \times 100}{\text{cc. spirit taken.}}.$$

7. *Bromine Absorption.* It must contain a sufficient quantity of impurities derived from the wood so that not more than 25 cc. or less than 15 cc. shall be required to decolorize a standard solution containing .5 gm. of bromine, as follows:

The standard bromine solution is made by dissolving 12.406 gm. of potassium bromide and 3.481 gm. of potassium bromate (which is of tested purity and has been dried for two hours at 100° C.) in a liter of water. Fifty cc. of the standard solution containing .5 gm. of bromine are placed in a glass-stoppered flask having a capacity of about 200 cc. This is acidified by the addition of 10 cc. of diluted sulphuric acid (1 to 4), and the whole shaken and allowed to stand a few minutes. The wood alcohol is then allowed to flow slowly into the mixture, drop by drop, from a burette until the color is entirely discharged. The temperature of the mixture should be 20° C.

In addition to the above requirements the methyl alcohol must be of such a character as to render the ethyl alcohol with which it is mixed unfit for use as a beverage.

Benzine. The benzine submitted for approval must be a hydrocarbon product derived either from petroleum or coal-tar. If derived from petroleum, it must have a sp.gr. of not less than .800. If derived from coal-tar, it must have a boiling point of not less than 150° C. or more than 200° C.

It must be of such character as to impart a decided odor to ethyl alcohol when mixed with it in the proportion of one-half of one part by volume.

Pyridin Bases. 1. *Color.* The liquid must meet the same requirements as to color that are imposed upon wood alcohol.

2. *Reaction with Cadmium Chloride.* Ten cc. of a solution of 1 cc. of pyridin bases in 100 cc. of water are treated with 5 cc. of a 5% water solution of anhydrous fused cadmium chloride, and the mixture vigorously shaken. Within ten minutes an abundant crystalline separation should take place.

2*a*. *Behavior with Nessler's Reagent.* With 5 cc. of Nessler's reagent, to 10 cc. of the same solution of pyridin bases must give a white precipitate.

3. *Boiling-point.* When 100 cc. are subjected to the determination of the boiling point in the same manner as prescribed for wood alcohol, at least 50 cc. must distill at 140° C. and at least 90 cc. at 160° C.

4. *Miscibility with Water.* The same requirements must be met as are imposed upon wood alcohol. (See above.)

5. *Content of Water.* When 20 cc. of pyridin bases are shaken with 20 cc. of a solution of caustic soda, with a specific gravity of 1.400, and the mixture allowed to stand for some time, at least 18.5 cc. of the pyridin bases must separate from the solution.

6. *Alkalinity.* One cc. of pyridin bases dissolved in 10 cc. of water are titrated with normal sulphuric acid until a drop of the mixture placed upon Congo paper shows a distinct blue border which soon disappears. It must require not less than 9.5 cc. of the acid solution to produce the reaction.

The Congo paper is prepared by treating filter paper with a solution of 1 gm. of Congo red in 1 l. of water, and drying it.

Denaturants Deposited in Warehouse. SEC. 27. As the distiller's business demands, he may bring into the denaturing bonded warehouse, in such receptacles as he may wish, any authorized denaturant. Such denaturants shall at once be deposited in the material room; thereafter they shall be in the custody and under the control of the officer in charge of the warehouse. Before any denaturant is used, except such denaturants as can remain in original packages, it must be dumped into the appropriate tank and the contents thoroughly mixed. In case of all denaturants submitted a sample of 1 pint must be taken from the tank or package, and this sample must be forwarded to the proper officer for analysis. The officer will then securely close and seal the tank or package, and no part of the con-

tents of same can be used until the sample has been officially tested and approved, and report of such test made to the officer in charge of the warehouse.

If the sample is approved the contents of the tank or package shall, upon the receipt of the report, become an approved denaturant, and the officer shall at once remove the seals and place the tank or package under Government locks.

If the sample does not meet the requirements of the specifications, the officer shall, upon receipt of the report of non-approval, permit the distiller, provided he desires, to treat or manipulate the proposed denaturant so as to render it a competent denaturant. In such case another sample must be submitted for approval. If the distiller does not desire to further treat the denaturant, the officer shall require him immediately to remove the contents of the tank or package from the premises.

Manner of Handling and Testing Samples of Denaturants. SEC. 28. When the distiller at any denaturing bonded warehouse has dumped into any material tank a quantity of a proposed denaturant as hereinbefore provided, the officer shall draw a sample from said tank. A heavy glass bottle, which must be provided by the distiller, shall be used as a container for said sample. The bottle must be securely closed and sealed, and a label affixed thereto, showing the serial number of the denaturing material tank from which the sample was taken, the date it was drawn from the tank, and the name of the officer sending it.

The sample shall be securely packed, and sent by express to the most convenient laboratory for test. All expenses in connection with the forwarding of samples must be borne by the distiller.

As soon as practicable the necessary tests of the sample shall be made in the laboratory and report made of its character.

One copy of the report should be sent to the collector of internal revenue of the district, and the other should be sent to the officer in charge of the denaturing bonded warehouse.

How Denatured Alcohol Shall be Gauged. SEC. 42. The gauging of denatured alcohol shall be by weight. In the case of packages the officer shall ascertain the tare by actually weighing each package when empty. Then, after each package has been filled in his presence, he shall ascertain the gross weight, and, by applying the tare, the net weight.

He shall then ascertain the proof in the usual manner, and by applying the proof to the wine gallons contents the proof gallons shall be ascertained.

The specific gravity of alcohol of a given proof denatured under either of the formulas for complete denaturation, or under any of the several special formulas authorized to date is approximately the same as that of ethyl alcohol of like proof. In gauging denatured alcohol therefore officers will use the tables in the gauger's weighing manual prescribed for use in gauging distilled spirits.

The regulations relating to the gauging of rectified spirits, so far as they apply to apparent proof and apparent proof gallons, shall apply to denatured spirits.

If, however, for any reason it should be impracticable to gauge denatured alcohol by weight, it may be gauged by rod.

Part II.—Survey of Distilleries. SEC. 6. Under section 4 of the act of March 2, 1907, spirits for denaturation only can be produced at distilleries of the capacity stated in said section from anything containing fermentable matter which upon being properly fermented will develop alcohol. There is no limit fixed as to the kind of material that can be used. The capacity of industrial distilleries will be determined from the capacity for distillation, and in fixing the capacity of each distillery the same will be done with reference to the kind and condition of material to be used and the method of distillation. The spirit-producing capacity of each distillery will be based on the maximum quantity of spirits that can be produced in twenty-four hours from the material containing the largest per centum of spirit-yielding matter it is proposed to use thereat, it being assumed, for the purpose of fixing the capacity, that all of the stills will be operated continuously during said period. For example, if it is the purpose of the distiller to use corn, potatoes, and fruit in the shape of pomace, in the manufacture of alcohol, corn containing the largest per cent of spirit-yielding matter, and the sweet-mash process being the process whereby the largest per cent of alcohol from a given quantity of corn is developed, the capacity of the distillery will be based upon the maximum quantity of spirits that the stills it is proposed to use can produce in twenty-four hours from corn-meal mash fermented under the sweet-mash process.

SEC. 7. In ascertaining the capacity of the still or stills used in a distillery it will be necessary, first, to ascertain the cubic contents of each still and reduce the same to gallons. This may be done by actual measurement, i.e., by filling with water and drawing off in sealed measures, or it may be done by any of the approved methods of determining capacity of stills. Second. It will be necessary to determine the number of boilings that can be made in the still in twenty-four hours of the several materials to be used, the

time required for filling or emptying the still being taken into account.

In determining the capacity of the still, boiling space must be allowed which observation has shown will ordinarily not exceed 10% of the cubic capacity of the still; frequently a much less per cent is sufficient. The time required for making a boiling will depend upon whether furnace or steam heat is used.

SEC. 8. The proof of alcohol manufactured for denaturation will not in any event be less than 150°. Therefore it will probably in many cases be necessary to redistill or double the spirits. At some distilleries it may be necessary to redistill the second time. For the purpose of doubling, a second still may be provided, or if a distiller desires he may use the same still or stills used in distilling raw material. If a double or high-wine still is used it must be considered in arriving at the capacity of the distillery, the same as other stills. The time necessary for doubling and the boiling space necessary to be so used must be determined and deducted from the gross capacity for distillation of the distillery.

SEC. 9. The following are the factors in determining the capacity of a distillery, to wit: The number of stills, the gross gallons capacity of each, the net capacity of each after deducting the boiling space, the number of boilings that can be made in twenty-four hours, the percentage of the whole boiling space necessary to be allowed for doubling, and the kind and condition of material it is proposed to use. The time required for making a boiling when the several varieties of material are used will probably not vary materially—that is to say, it will require as long to distill the low wine from a still filled with fruit pomace as it will to distill a filling of beer made from corn or potatoes. The capacity of a distillery will in each particular case depend upon the alcoholic strength of the material it is proposed to distill, and the alcoholic strength of each variety of material will depend on the manner or method of fermentation.

In practice, it has been found that where grain is mashed and fermented under the sweet-mash process it is necessary to add sufficient water to bring the resulting quantity of beer to something like 45 wine gallons to the bushel. A bushel of grain contains approximately 2.375 gal. of absolute alcohol. Forty-five gal. of beer, representing a bushel of grain mashed and fermented under the sweet-mash process, would consist therefore of a little over $5\frac{1}{5}\%$ of alcohol.

At distilleries where it is proposed to use grain, and the same is the greatest spirit-yielding material used, the spirit-producing capac-

ity of the distillery would be 5⅕% of the gross cubic contents capacity of all of the stills less the per cent allowed for boiling space multiplied by the number of boilings that can be made in twenty-four hours less allowance for doubling.

The fermentable matter in fruit is much less than that in grain, it ranging from 15–30%, while the fermentable matter in grain ranges from 70–85%, but in the process of fermentation it is necessary to add much more water to grain than to fruit; hence the alcoholic strength of fruit material ready for distillation, volume for volume, is often in excess of that of beer produced from grain. Fruit pomace, after being sufficiently diluted for distilling purposes, usually contains a smaller per cent of alcohol than beer from grain, but the pure undiluted fermented juice from fruit always contains a larger percentage of alcohol than beer made from grain. Hence when a distiller proposes to use cider, wine, or other fermented fruit juices, the capacity of the distillery should be based on the fermented fruit juice richest in alcohol to be used. Grapes contain the largest per cent of fermentable matter, and when it is proposed to use wine from grapes the capacity of the distillery should be based upon the quantity of alcohol from wine that can be produced thereat in twenty-four hours.

Distilleries to be Divided into Two Classes. SEC. 30. Industrial distilleries shall be divided into two classes. Those of a daily spirit-producing capacity of 50 proof gallons or less shall constitute the first class, and those of a daily spirit-producing capacity of more than 50 and not more than 100 proof gallons shall constitute the second class.

Kind of Spirits that Can be Manufactured. SEC. 38. There cannot be manufactured at industrial distilleries any spirits except such as can under the law and regulations be denatured; that is to say, there cannot be manufactured at these distilleries alcohol of less than 180° proof or rum of less than 150° proof.

Denaturing Material to be Tested and Handled Same as at Denaturing Bonded Warehouses. SEC. 49. Denaturing material shall be received and handled in the same manner as it is received and handled at regular denaturing bonded warehouses. Samples shall be taken and forwarded to the nearest laboratory and tested in the same manner as such samples are taken and tested in case of regular denaturing bonded warehouses. In the case of denaturants received from central or other denaturing bonded warehouses, and which have been properly tested and duly authorized and handled as hereinbefore prescribed, a record must be provided and kept as required in section 22 hereof.

Part III.—How Alcohol Must Be Weighed. SEC. 15. The following instructions must be followed by the officer gauging alcohol by means of weighing tank:

He must satisfy himself that the weighing tank is empty. He must see that the scale is in perfect balance and that the stopcocks controlling the flow of spirits from the discharge pipes are securely fastened and locked and that it is not possible for any spirits to flow from the weighing tank. Then he may unfasten the lock securing the stopcock controlling the flow of spirits from the cistern, storage or mixing tank, as the case may be, and permit the spirits to flow from the tank or cistern to the weighing tank. When the weighing tank is full, or the quantity of spirits desired to be gauged has been drawn off into said tank, then the cock controlling the flow of spirits from the cistern or tank, as the case may be, must be closed and locked. Then all connections between the weighing tank and the tank or cistern from which the weighing tank was filled must be broken, and the officer must be careful to see that all pipe connections between the weighing tank and other tanks are broken so that the weighing tank swings clear and the exact weight can be registered on the scale. The weight of the spirits must then be ascertained, and they must at once be removed to the storage tank, mixing tank, or other tank or tank car for transportation, as the case may be, by making the connections with the proper discharge pipe and unlocking the cock controlling the flow of spirits through such discharge pipe.

The officer gauging the spirits must take the proof of each filling of spirits gauged. Before taking the proof he must wait until the entire quantity to be gauged is ready to be weighed and must see that the spirits are thoroughly mixed so that the alcohol tested is a representative sample of the contents of the tank.

How Gallons May be Determined. SEC. 16. To determine the quantity in wine and proof gallons of spirits in a given filling of the weighing tank, the pounds as ascertained shall be reduced to gallons by applying the tables in the United States Internal Revenue Gaugers' Weighing Manual, 1906. There are several methods that may be used, but it is believed that the method used in the following example is shortest:

The weighing tank scale at a given filling shows the net weight of alcohol to be 29,315 lb., proof 190. Reduce to wine and proof gallons.

215 lb.+2,100 lb.+27,000 lb.=29,315 lb.

Pounds.		Gallons—Wine.	Gallons—Proof.
215 (page 613, Manual)	=	31.63	60.09
2,100 (300 lb.=44.13 W. G.=83.85 P. G.×7) (P. 614)	=	308.91	586.95
27,000 (300 lb.=44.13 W. G.=83.85 P. G.×9×10		3,971.70	7,546.50
29,315 at 190 proof	=	4,312.24	8,193.54

Part V.—Completely Denatured Alcohol. SEC. 1. Alcohol denatured as provided in section 26, Part I, of these Regulations is to be classed as *completely denatured alcohol*. Alcohol denatured in any other manner will be classed as *specially denatured alcohol*.

Denatured Alcohol Not to be Stored on Certain Premises, and Not to be Used for Certain Purposes. SEC. 2. Neither completely nor specially denatured alcohol shall be kept or stored on the premises of the following classes of persons, to wit: Dealers in wines, fermented liquors or distilled spirits, rectifiers of spirits, manufacturers of and dealers in beverages of any kind, manufacturers of liquid medicinal preparations, or distillers (except as to such denatured alcohol as is manufactured by themselves), manufacturers of vinegar by the vaporizing process and the use of a still and mash, wort or wash, and persons who, in the course of business, have or keep distilled spirits, wines, or malt liquors or other beverages on their premises: *Provided*, That collectors of internal revenue are hereby authorized to issue to druggists or grocers permits to deal in denatured alcohol, or to use denatured alcohol in manufacturing processes, as authorized by law or regulations, without restrictions as to place of storage, where, upon careful inquiry made, it shall satisfactorily appear that the applicant is entitled to the full confidence of the Department and the sale of such beverage, spirits, wines, or liquors is and will be incidental only to the business carried on by the applicant, and that such wines or liquors are not drunk on the premises of the dealer, and *provided further*, that denatured alcohol intended solely for fuel, light, or power, or for other domestic purposes, may be stored on the same premises with other distilled spirits, wines, or liquors if kept in a room separate from that where such other spirits, wines, or liquors are stored. Where five or more wine gallons of denatured alcohol are stored on such premises at any one time the same must be kept in a tank or room, securely locked; but the privilege here granted will in no case apply to premises where the business of rectifying, purifying, or compounding distilled spirits, wines, or liquors is carried on.

Denatured Alcohol Not to be Used as a Component Part of Beverages or Medicinal Preparations. SEC. 3. Denatured alcohol cannot lawfully be used as a component part of any beverage or of any essence, flavoring extract, perfume, or other preparation capable of being used as a beverage, nor can it be used as a component part of any medicinal preparation; and anyone so using denatured alcohol or who sells any beverage or medicinal preparation in the manufacture of which denatured alcohol has been so used becomes subject to the penalties prescribed in section 2 of the act of June 7, 1906.

Permits Required. SEC. 4. Persons wishing to deal in completely denatured alcohol must secure permits from the collector of internal revenue of the district in which the business is to be carried on.

Every person who sells, or offers for sale, denatured alcohol in quantities of *five gallons or more* shall be classed as a *wholesale dealer in denatured alcohol.*

Every person who sells, or offers for sale, denatured alcohol in quantities of *less than five gallons* shall be classed as a *retail dealer in denatured alcohol.*

The same person may be both a wholesale and a retail dealer, but the retail and wholesale business will be considered separate, and permits must be secured for each.

Collectors are authorized to issue permits, in forms herein prescribed, upon application duly made. Such permits are to be numbered serially, in the same manner in which special-tax stamps are numbered, and are to be on the forms herein prescribed.

Permits in Force until Canceled. SEC. 6. Applications to deal in denatured alcohol must be made to the collector of internal revenue of the district in which it is proposed to do business.

In case a dealer desires to discontinue dealing in denatured alcohol he will return his permit to the collector, otherwise the permit will remain in force continuously unless canceled under the provisions of the following section.

In case a dealer in denatured alcohol moves his place of business he must make application for the transfer of his permit to the place to which he moves.

Consumer to Obtain Permit. SEC. 13. A consumer desiring to secure denatured alcohol in quantities of 5 gal. or more in other than original stamped packages and keep it stored in consumers' storage tanks must secure permit from the collector of internal revenue of the district in which he resides. In order to obtain such permit he shall make application on a form specially provided for the purpose, wherein he shall state his name, residence, purpose for which he desires to use the denatured alcohol, and the number and size of the storage tanks he proposes to use. He shall also in said application state the premises on which he proposes to keep the denatured alcohol stored.

The collector shall, upon receipt of such application, issue to the applicant permit to receive and keep stored in tanks denatured alcohol for use in the manner indicated in the application. The permit shall state the name and address of the consumer, the premises upon which the denatured alcohol is to be stored, the uses to which the

alcohol may be put, and the number of storage tanks and the capacity of each.

Denatured Alcohol Not to be Delivered unless Consumer has Permit. SEC. 14. A denaturer or a wholesale dealer in denatured alcohol shall not deliver such alcohol from transportation or delivery tanks to a consumer to be stored in consumers' tanks unless the consumer has a permit as required by these regulations. This provision does not apply, of course, to completely denatured alcohol in stamped packages, which can be sold and delivered to any person allowed by these regulations to use or handle such alcohol.

Denatured Alcohol from Different Denatures May Be Mixed in the Storage Tanks—Denatured Alcohol to be Gauged by Weight. SEC. 20. Denatured alcohol of the same proof and denatured under the same formula, received from different denaturers, may be deposited in the same dealers' storage tanks.

Wholesale dealers who receive denatured alcohol in tank cars or other transportation tanks, and who desire to transfer such alcohol to dealers' storage tanks, shall gauge the denatured alcohol as received by weight.

If the alcohol is conveyed into the storage tank through a pipe, a weighing tank, such as is prescribed for the use of denaturers, shall be employed, but if transferred by means of delivery tanks the weight of the alcohol may be ascertained by the use of platform scales.

Likewise when dealers send denatured alcohol out from their stock, drawn either from storage tanks or transportation tanks used as storage tanks, they must gauge the alcohol so sent out, and the gauge must be by weight.

If drawn off in packages to be stamped, the gauging must be done by the dealer in the same manner as it is done by the gauger at a denaturing bonded warehouse.

If drawn off in tanks for transfer to other dealers or to manufacturers or consumers using denatured alcohol, a weighing tank must be used for making the gauge; or if the alcohol is transferred by means of delivery tanks an ordinary platform scale may be used.

When deliveries of denatured alcohol are made from delivery tanks at points where platform scales are not available, the alcohol may be measured by means of any suitable measuring vessel.

After the alcohol has been weighed the person in charge of the delivery tank must see that all of the alcohol delivered is dumped into the storage tank on the premises.

Dealers who receive and handle denatured alcohol in bulk should provide themselves with an hydrometer, to ascertain the proof, and

with the Gaugers' Weighing Manual, for reducing the spirits from pounds to gallons.

Manner in which Denatured Alcohol Can be Retailed. SEC. 24. Denatured alcohol can be received by manufacturers or dealers, (*a*) stamped packages, (*b*) from delivery tanks, and (*c*) in quantities of less than 5 gal. from other retail dealers. If they receive it from delivery tanks in quantities of 5 gal. or more they must keep it stored in storage tanks specially set aside for that purpose, such storage tanks to be similar to consumers' storage tanks.

Wholesale dealers in denatured alcohol who are also retail dealers cannot draw off and sell at retail, either from transportation or storage tanks. Alcohol disposed of by such dealers at retail must be sold as above provided in case of retail dealers.

Part VI.—Manufacturers Using Completely Denatured Alcohol to Secure Permit. SEC. 1. Manufacturers desiring to use in manufacturing processes completely denatured alcohol, such as is put upon the market for sale generally, may use such alcohol, subject to the following restrictions:

A manufacturer who uses an average of 50 gal. or more of completely denatured alcohol per month, or who purchases denatured alcohol in quantities of as much as 150 wine gal. during one calendar month, must make application to the collector of the district in which his manufacturing establishment is located, for a permit to use such alcohol, in which application he shall state the exact location of his place of business and the location of the storeroom or tank in which his alcohol is to be stored. He must also state the number of wine gallons of denatured alcohol he expects to use per month.

The alcohol received by such manufacturer may be stored on his premises, either in tanks, in or outside of the buildings described in the application, or in any room or rooms included in the premises, provided such tanks or rooms are kept securely locked when the manufactory is not in actual operation. All such storage tanks or rooms, however, should be properly described in the application filed.

Where the alcohol used is to be recovered, the manufacturer must, in such cases, provide locked tanks or storerooms constructed in the same manner as required of manufacturers using specially denatured alcohol.

Manufacturers who have provided approved storage tanks may dump into such tanks denatured alcohol as received, whether it be received in transportation tanks, delivery tanks or in stamped packages, but denatured alcohol, if received in stamped packages by the

manufacturer, must be kept in such packages until used, unless approved storage tank or tanks are provided.

Manufacturers receiving denatured alcohol in delivery or transportation tanks and depositing it in manufacturers' storage tanks must gauge it as it is received, and the regulations prescribing the method of gauging completely denatured alcohol received by wholesale dealers and deposited by them in dealers' storage tanks apply.

Manufacturer to Send Notice to Collector. SEC. 2. A manufacturer receiving denatured alcohol in transportation tanks must prepare and send to the collector of his district a notice of the receipt of such alcohol similar to the notice sent under like circumstances by wholesale dealers in denatured alcohol.

Denatured Alcohol Must be Kept in Room Set Aside for that Purpose and Nowhere Else. SEC. 3. Denatured alcohol must not be stored on the manufacturer's premises anywhere except in the room or rooms, tank or tanks described in the application, and no tax-paid spirits shall under any circumstances be stored in the same room with denatured alcohol.

Manufacturer's Application for Permit. SEC. 4. Application for permit to use completely denatured alcohol must in all cases be made by the manufacturer in person or in his name by his authorized agent.

In the case of a firm the signature must be made in the firm name by a member of the firm or by some person duly authorized as above indicated.

In the case of a corporation the signature must be made in the name and under the seal of the corporation by the proper officer thereof.

In the permit a description of each tank authorized in connection with the handling or storage of the alcohol must be given, and the permit shall be in the following form:

(Form 560.)

PERMIT TO MANUFACTURER TO USE COMPLETELY DENATURED ALCOHOL.

It appearing upon application duly made by ——— ———, that under the act of June 7, 1906,——— ——— should be permitted to use completely denatured alcohol in quantities of more than 50 gallons per month at ——— factory of ———, in the county of ———, State of ———, in the manufacture of ———, permission is hereby given to procure completely denatured alcohol in accordance with the regulations and use same in such manufacture at said place.

———— ————,
Collector —— District.

The above permit shall remain in force until canceled or revoked.

Special Denaturants. SEC. 5. The agents adapted to and adopted for use in complete denaturation render alcohol unfit for use

in many industries in which ethyl alcohol withdrawn free of tax may be profitably employed. In order therefore to give full scope to the operation of the law, special denaturants will be authorized when absolutely necessary. However, the strictest surveillance must be exercised in the handling of alcohol incompletely or specially denatured.

Formula for Special Denaturants to be Submitted to the Commissioner. SEC. 6. The Commissioner of Internal Revenue will consider any formula for special denaturation that may be submitted by any manufacturer in any art or industry and will determine (1) whether or not the manufacture in which it is proposed to use the alcohol belongs to a class in which tax-free alcohol withdrawn under the provisions of the law can be used; (2) whether or not it is practicable to permit the use of the proposed denaturant and at the same time properly safeguard the revenue. But one special denaturant will be authorized for the same class of industries, unless it shall be shown that there is good reason for additional special denaturants.

The Commissioner will announce from time to time the formulas of denaturants that will be permitted in the several classes of industries in which tax-free alcohol can be used.

Up to date the following formulas have been authorized for use in the following industries, to wit:

To 100 gal. of ethyl alcohol add:

No. 1. Five gal. of approved wood alcohol, the wood alcohol to be subject to the same specifications as are imposed upon the methyl alcohol used in completely denatured alcohol, which are set out in Sec. 26, Part I.

Industries. Shellac varnishes, photographic dry plates, embalming fluid, heliotropin, lacquers from soluble cotton, resin of podophyllum, and similar products, manufacture of thermometer and barometer tubes.

No. 2. Seven pounds of camphor and 5 gal. of commercially pure methyl alcohol, the methyl alcohol to have a specific gravity of not more than 0.810 at 60° F.

No. 2 (*a*) (alternative). Two gal. of approved wood alcohol and 2 gal. of benzol.

The wood alcohol shall be subject to the same specifications as are imposed upon the wood alcohol used in completely denatured alcohol which are set forth in Sec. 26, Part I.

The benzol shall be subject to the following specifications:

Solubility in Water. When 10 cc. of benzol are shaken with an equal volume of water in a glass-stoppered cylinder, divided into

tenths of a cubic centimeter, and allowed to stand 5 minutes to separate, the upper layer of liquid must measure not less than 9.5 cc.

Boiling Point. When 100 cc. of benzol are subjected to distillation in the same manner as prescribed for the determination of the boiling point of wood alcohol in Sec. 26, Part I, not more than 1 cc. should go over at 77° C., and not less less than 90 cc. at 100° C.

Industries. Manufacture of celluloid, pyralin, and similar products.

No. 3. Six and one-half gal. of the following mixture: 5 gal. of commercially pure methyl alcohol, having a specific gravity of not more than 0.810 at 60° F.; 1 gal. of castor oil; ½ gal. of 36° Bé. caustic soda lye.

The denatured mixture is best prepared by dissolving the castor oil in the methyl alcohol, and then adding the soda lye.

Industry. Transparent soap.

No. 4. One gal. of the following solution: 12 gal. of an aqueous solution containing 40% nicotine; 0.4 lb. acid, yellow dye (fast yellow); 0.4 lb. tetrazo brilliant blue, 12 B. Conct.; water to make 100 gal.

The tobacco denaturant must conform to the following analytical requirements.

Determination of Nicotine. It must contain not less than 4.5% of nicotine when tested by the following process:

Ten cc. of the solution are measured into a 500 cc. Kjeldahl flask, provided with a suitable bulb tube, 10 cc. of N/10 alkali added, the liquid made up to 50 cc., and distilled in a current of steam until the distillate is no longer alkaline (about 500 cc.). The distillate is then titrated with N/10 H_2SO_4, using rosolic acid as an indicator. Not less than 27.8 cc. should be required for the neutralization.

Test of Coloring Matter. Take 1 cc. of the denaturant and make up to 100 cc. with water, acidulating with a few drops of H_2SO_4. Immerse in this solution a piece of white cotton cloth and boil the solution. Continue the process, adding more cloth and more water if necessary, until all the blue color in the solution is fixed on the cloth. Then add a piece of white woolen cloth, and boil the bath as before, until all the yellow color is fixed upon the cloth. Both the cotton and woolen cloths should show decided colors—the cotton blue and the woolen yellow.

Intensity of Color. The denaturant solution, when observed in an eighth-inch cell of Lovibond's tintometer, must show a color of an intensity not less than No. 24 yellow, combined with No. 3 blue.

Industry. Manufacture of smoking and chewing tobacco.

No. 5. Sixty-five lb. of sulphuric ether, 3 lb. of cadmium iodide, and 3 lb. of ammonium iodide.

Industry. Manufacture of photo-engravings.

No. 6. Three gal. commercially pure methyl alcohol and $\frac{1}{2}$ gal. pyridin bases; the methyl alcohol to have a specific gravity of not more than 0.810 at 60° F.; the pyridin bases to conform to specifications as set forth in Sec. 26, Part I.

Industry. Manufacture of fulminate of mercury.

No. 7. Five gal. commercially pure methyl alcohol; $1\frac{1}{2}$ lb. cyanide of potassium; $\frac{1}{8}$ oz. patent Blue B. (acid calcium, magnesium, or sodium salt of the disulpho-acids of meta-oxytetraethyl-diamidotriphenylcarbidrids). The methyl alcohol to have a specific gravity of not more than 0.810 at 60° F.

The denaturing mixture is best prepared by dissolving the cyanide of potassium in a small quantity of water, and then adding this solution to the alcohol, with which the methyl alcohol, containing the dissolved color, has been previously mixed.

Industry. Manufacture of watches.

No. 8. One gal. of pyridin bases and 1 gal. of benzol. The pyridin bases to conform to specifications set forth in Sec. 26, Part I. The benzol to be subject to the specifications contained in formula No. 2 (*a*).

Industry. Manufacture of sulphonmethane.

No. 9. Ten gal. of acetone and 2 gal. of petroleum naphtha. The petroleum naphtha to have a specific gravity of not less than 0.650 nor more than 0.720 at 60° F.

Industry. Purification of rubber.

No. 10. Two gal. of approved wood alcohol and 2 gal. of benzol. The wood alcohol shall be subject to the same specifications as are imposed upon the methyl alcohol used in completely denatured alcohol, which are set forth in Sec. 26, Part I. The benzol to conform to the specifications imposed in formula No. 2 (*a*).

Industry. Manufacture of pastes and varnishes from soluble cotton.

No 11. One hundred lb. of sulphuric ether and 10 lb. of cadmium iodide.

Industry. Manufacture of photographic collodion.

Application for Permit to Use Special Denaturants. Sec. 7. Manufacturers desiring to use specially denatured alcohol in their business must make application to the collector of the district in which the business is located.

In this application the following information must be given: The location of the plant; the name and address of each partner, or the

corporate name, if a corporation; a complete description of the room or place in which it is proposed to keep the denatured alcohol stored, as to dimensions, openings, and kind of materials of which constructed; a complete description of any specially denatured alcohol storage tanks used for the storage of alcohol, also of any tanks that may be used for recovered or restored alcohol, or mixing tanks used for the redenaturation of alcohol, or weighing tanks used for gauging denatured alcohol; the kind of business carried on and in which it is proposed to use denatured alcohol; the special denaturants desired to be used, and the reasons for desiring to use such special denaturants; the quantity of denatured alcohol it is estimated will be used until the first of next July following, and if alcohol is recovered in the process of manufacture, the manner in which it is recovered, its condition when recovered, and the percentage so recovered.

Storeroom to be Set Aside. How Constructed. SEC. 8. A room or building must be prepared and set aside in which to store the specially denatured alcohol after it is brought upon the premises, and such room or building shall be numbered serially in each collection district.

Said room must be on the manufacturing premises, and it may be used for storage of specially denatured alcohol, also alcohol recovered in the process of manufacture, for the work of restoring and redenaturing such recovered alcohol, and for no other purpose.

It must be securely constructed in such a manner as to render entrance impossible during the absence of the person in whose charge it is placed.

The doors and windows must be so constructed that they may be securely fastened. All necessary openings must be under a prescribed lock, the key to be kept by the person designated to have charge of the storeroom.

A sign "Denatured Alcohol Storeroom No. ——" must be placed over the main door of the room.

Specially Denatured Alcohol Storage Tanks. SEC. 9. Specially denatured alcohol received in transportation or delivery tanks may be stored in such transportation tanks in the storeroom for denatured alcohol, such alcohol to be drawn from such tanks as it is needed in manufacturing processes, or it may be dumped from such transportation or delivery tanks immediately upon receipt into storage tanks set up in the storeroom. Such storage tanks shall be similar in construction to storage tanks in denaturing warehouse. They shall be numbered serially in each storerom and shall be known and designated as "Specially denatured alcohol storage tanks."

The number, designation, and capacity in wine gallons shall be plainly marked on each storage tank.

In the event denatured alcohol is transferred to storage tanks from transportation or delivery tanks by means of pipes, a weighing tank, similar to that prescribed for use in denaturing warehouses, must be provided, and the requirements as to pipes, openings, valves, cocks, locks, etc., which apply to weighing and storage tanks in denaturing warehouses, shall apply. Likewise the regulations as to gauging specially denatured alcohol at denaturing bonded warehouses shall apply.

Specially denatured alcohol may be transferred from tank cars to storage tanks by means of delivery tanks, in which case ordinary platform scales or weighing tanks may be used.

Alcohol to be Used as Received. SEC. 34. Specially denatured alcohol must be used in the manufacture of the products exactly as stated in the manufacturer's notice and in the collector's permit, and it cannot be used in any other manner; and manufacturers using such alcohol must complete the work of manufacture of the products specified in their notice and bond on the premises upon which they are authorized by their permit to use the alcohol.

Provisions Applicable to Manufacturers Using Either Specially or Completely Denatured Alcohol. SEC. 36. Under no circumstances will denaturers, manufacturers, or dealers, or any other persons, in any manner treat either specially or completely denatured alcohol by adding anything to it or taking anything from it until it is ready for the use for which it is to be employed. It must go into manufacture or consumption in exactly the same condition that is was when it left the denaturer. Diluting completely denatured alcohol will be held to be such manipulation as is forbidden by law.

SEC. 37. Manufacturers using specially denatured alcohol must store it in the storeroom or tanks set apart for that purpose, the place for deposit named in the bond and application, and nowhere else. Likewise they must deposit recovered alcohol in said storeroom or tank as fast as it is recovered. It will be held to be a breach of the bond and a violation of the law if any denatured alcohol of any kind, character, or description should be found stored at any other place on the premises.

Part VII.—SEC. 1. SEC. 2 of the act of June 7, 1906, provides that manufacturers employing processes in which alcohol used free of tax under the provisions of this act is expressed or evaporated from the articles manufactured shall be permitted to recover such alcohol and to have such alcohol restored to a condition suitable solely for reuse in

manufacturing processes under such regulations as the Commissioner of Internal Revenue, with the approval of the Secretary of the Treasury, shall prescribe.

Alcohol to be Restored on Premises where Used or in a Restoring Plant. SEC. 2. The work of recovering alcohol and restoring it to a condition suitable for reuse in manufacturing processes must be done on the premises on which said alcohol was originally used or at a duly authorized restoring plant, and it must be reused in the same manufacturing establishment in which it was originally used (except as provided in Part VIII of these Regulations).

Still May be Used. SEC. 3. If in restoring alcohol to a condition suitable for reuse a still is necessary, the manufacturer may set up on his premises such still and any other apparatus that may be necessary for use in connection with or independent of the still in the work of recovering such alcohol. The still must be registered in the same manner in which the law and regulations require that all stills set up be registered. It cannot be used for any other purpose than to recover by redistilling alcohol that has been withdrawn from bond free of tax for denaturing purposes, denatured, and then used by the manufacturers.

Application to be Filed. SEC. 4. A manufacturer desiring to recover and reuse denatured alcohol must, in his application for permit to use denatured alcohol in his business, in addition to the statements required to be made in said application, state fully the manner in which he intends to recover alcohol, the condition as to proof, purity, etc., of the alcohol when it is recovered, the percentage of alcohol used in said business which he proposes to recover, and the estimated quantity in proof gallons of alcohol he expects to recover during the year. If it is necessary before redenaturing said alcohol to redistill or otherwise treat it in order to restore it to a condition suitable as to proof and purity for use in the particular manufacture for which it is intended, the process must be explained, and if a still is to be used the capacity of the still must be set out in full and the other apparatus used in connection with the still must be described, or if it is his intention to send the recovered alcohol to a restoring and redenaturing plant the applicant will so state.

Alcohol to be Stored in Storeroom as Recovered. SEC. 6. The manufacturer must draw off alcohol, as it is recovered, into packages and must immediately store it in the same condition as it is when recovered in the storeroom for denatured alcohol, and it will thereafter be in charge of the custodian of said storeroom.

Alcohol recovered at such establishments and placed in the store

room for denatured alcohol will not be redistilled or otherwise treated except in the presence of the proper officer: *Provided,* That such recovered alcohol may be sent to a central restoring and redenaturing plant.

Manufacturer to Keep Record and Send Notice of Shipments. SEC. 7. A manufacturer using denatured alcohol and recovering it in process of manufacture and desiring to have such alcohol restored to a condition suitable for reuse in manufacture at a restoring and redenaturing plant, must keep a record in which he shall enter the quantity in wine and proof gallons of alcohol recovered each day and stored in his storeroom.

At such times as he may desire he may ship such recovered alcohol to a restoring and redenaturing plant, but before it leaves his storeroom, if it be not shipped in tanks, he must put it into suitable packages, and upon the head of each package he must place the following marks:

Denatured alcohol recovered at the manufacturing establishment of ——— ———, storeroom No. ——, located at ——— ———, in the district of ———, ——— wine gallons, ——— proof gallons, serial No. ———.

He must number these packages serially, beginning with No. 1.

Upon the credit side of his record he shall enter the date when he sends any recovered alcohol to the restoring and redenaturing plant, the name of the proprietor of the plant to which it is sent, the number of packages or tanks, the serial numbers of same, and the wine and proof gallons.

The manufacturer shall at the end of each month prepare a transcript of this record and swear to it and forward it to the collector in a manner similar to that provided by section 29, Part VI.

Notice to be Sent to Collector. SEC. 8. Upon the date when he places in transit any recovered alcohol he must prepare a notice in which he shall state the number of packages or tanks, the serial numbers of same, the wine and proof gallons, and the name of the restoring and redenaturing plant to which the alcohol is sent.

This notice must be in triplicate, provided the restoring and redenaturing plant is located in one district and the manufacturing establishment in another. If they are both in the same collection district then it may be prepared in duplicate.

One copy of the notice is to be sent to the collector of the district in which the manufacturing plant is located, another to the collector of the district in which the restoring and redenaturing plant is located, provided it is in another district, and the remaining copy to the officer in charge of the restoring and redenaturing plant.

Recovered Alcohol May be Collected in Receiving Tanks Outside of Storeroom. SEC. 9. The manufacturer may collect recovered alcohol in tanks outside of the storeroom, such tanks to be known and designated as "Receiving Tanks," provided a continuous closed pipe connects the recovery apparatus with such tank and provided the receiving tank has but one outlet, which outlet shall be kept securely locked. Alcohol so recovered may be forwarded direct to central restoring and redenaturing plant or it may be deposited in the manufacturer's storeroom.

Tanks to be Used for Receiving Recovered Alcohol and for Storing Recovered and Restored Alcohol. SEC. 10. Recovered alcohol may be stored in the storeroom, either in packages or in storage tanks used only for the storage of recovered alcohol. Likewise restored alcohol may be stored in a storeroom in storage tanks used only for the storage of restored alcohol.

Receiving tanks for recovered alcohol and storage tanks for recovered alcohol and storage tanks for restored alcohol shall be numbered serially at each storeroom and shall be plainly marked with the serial number of the tank, the capacity in wine gallons, and the designation of the tank, as "Receiving Tank," "Recovered Alcohol Tank," or "Restored Alcohol Tank," as the case may be.

Such tanks shall be constructed in a manner provided in the case of similar tanks at denaturing warehouses and shall be specifically described in the application of the manufacturer.

Recovered and Restored Alcohol to be Gauged by Weight. SEC. 11. Recovered alcohol may be restored on the premises of the manufacturer, and such alcohol when restored and redenatured shall be gauged by weight, either by the use of a weighing tank, such as is prescribed for denaturing warehouses or by weighing in packages.

Recovered alcohol shipped to a central restoring and redenaturing plant may be shipped in packages or tank cars, transportation or delivery tanks, and shall be gauged by the manufacturer in the same manner as is prescribed for the gauging of denatured alcohol at denaturing warehouses.

Metal Pipes to be Used in Transferring Recovered and Restored Alcohol to the Several Tanks on the Manufacturing Premises. SEC. 12. Metal pipes may be used for transferring recovered alcohol from the receiving tank to the recovered alcohol tank, or for transferring recovered alcohol either to the restoring apparatus on the premises or to transportation or delivery tanks for transfer to central restoring and redenaturing plants, or for transferring restored alcohol from the restoring apparatus to the restored-alcohol tank, or for

transferring redenatured alcohol to the storage tanks for denatured alcohol, the discharge being first into weighing tanks, in the same manner as at distillery bonded or denaturing warehouses.

Such pipes must be so constructed that they will be in plain view while passing from one tank to another, and the regulations applying to pipes used in transferring alcohol from distillery cisterns to distillery bonded warehouse apply.

The pipes must be supplied with necessary cocks and valves for controlling the flow of the recovered, restored, or redenatured alcohol.

All cocks, valves, and openings must be controlled by approved locks, the keys to be carried by the custodian of the storeroom.

May Use Restored Alcohol or Storage Tanks to Redenature Alcohol. SEC. 13. The manufacturer may redenature the alcohol either in restored alcohol tanks or in the storage tanks for denatured alcohol, but if he so uses the restored alcohol tanks he must, as soon as the process of redenaturation is complete, remove the redenatured alcohol to the regular storage tanks for denatured alcohol.

Still Used for Recovering Alcohol Only, Etc. SEC. 14. The still employed in redistillation will not be used for any purpose except to redistill alcohol for redenturation, and it will not be used except in the presence of the proper officer. When the still is not being used the furnace door or cocks controlling the steam connections will be securely locked and the collector will keep the keys to said locks in his possession.

Where, owing to other duties, an officer cannot be assigned to the manufacturer's premises to supervise the redistillation of alcohol at the time specified in the manufacturer's application, the collector, if satisfied that all alcohol restored will be duly accounted for, may, in such cases, deliver the keys to the manufacturer, together with a written permit to use the stills in the absence of the officer during the time to be specified in such permit. The keys so delivered must be returned to the collector at the expiration of time so fixed; and the alcohol so restored will be securely kept in the manufacturer's storeroom, or in locked tanks, until denatured by an officer, who should be assigned for this purpose as soon as his other duties permit.

Reuse of Denatured Alcohol Recovered in Original Denatured State. SEC. 15. To enable manufacturers using denatured alcohol for manufacturing purposes to recover and reuse the same without awaiting the arrival of an inspecting officer, collectors of internal revenue are authorized to permit such recovery and reuse where the alcohol is recovered in its original denatured state, or practically so, and is stored, used, and recovered for reuse in locked or sealed tanks,

stills, vessels, or other receptacles connected by continuous closed pipes.

In such case the manufacturer, in filing his application, Form 580 or 581, will append thereto a diagram showing the location, construction, size, and arrangement of all tanks, vessels, and stills to be used and all pipe connections. The manner in which the alcohol is to be stored, used, and recovered for reuse must also be fully described in the application or on the diagram furnished.

Records and Tanks. SEC. 16. An accurate account must be kept by the manufacturer in Record 567 of all alcohol received and dumped; also of the quantity withdrawn from such storage tank or deposited therein each day.

In recording the quantity dumped the wine and proof gallons must in all cases be stated, and a full description of the packages or tanks in which the alcohol was received on the premises should be entered in the record, as required in case of alcohol received and deposited in the manufacturer's storeroom. The quantity of alcohol in wine gallons recovered and redeposited in such tank each day will be noted in the appropriate column on the debit side of the record. The quantity in proof gallons so redeposited will also be recorded where the actual proof of the recovered alcohol is known. Like entries will also be made on the credit side of the record of the alcohol withdrawn for manufacturing purposes. In the cases here provided for the manufacturer will not be required to keep the prescribed records, Forms 568 and 569.

In order that the quantity redeposited in such storage tanks and the quantity withdrawn therefrom may be determined, each of such tanks should be of a uniform shape and of suitable size, and should be provided with a glass gauge and graduated scale which will show the actual contents of the tank in wine gallons.

Redenaturation. SEC. 17. When alcohol recovered in the manner described in Sec. 16 is found to require redenaturation, the manufacturer will add to such alcohol a sufficient quantity of the approved denaturant, either in process of recovery or after the alcohol has been redeposited in the storage tank; but in such cases the tank or vessel containing the alcohol must be at once locked or sealed by the manufacturer after the required denaturant has been used. Samples of all denaturants to be so used must be first submitted for analysis, and all expenses connected with the forwarding and testing of such samples or samples of recovered alcohol, obtained by the inspecting officer as hereinafter provided, must be borne by the manufacturer.

The manner of obtaining and forwarding such samples shall be

the same as provided in Sec. 28, Part I, relating to samples of denaturants used in denaturing warehouses. Such samples shall be forwarded to the nearest or most convenient point where an authorized chemist is located.

Official Inspection, Samples, etc. SEC. 18. The officer on visiting premises where alcohol is recovered, as herein provided, will measure and proof all such alcohol found on the premises, either in storage tanks or in process. He will also carefully examine the alcohol stored in the tanks with the view of ascertaining whether the same is in a condition "suitable solely for reuse in manufacturing processes," as provided in Sec. 2, of the act of June 7, 1906. He will, whenever he is in doubt as to the character of the alcohol, procure a sample of such alcohol and forward the same for analysis as herein before directed. In all such cases where the alcohol is found or believed to be deficient, either in proof or in denaturants, the manufacturer will at once take the necessary steps to bring it up to the required standard, and any failure on his part in this matter will be regarded as sufficient ground on which to revoke the permit issued to him.

Application to Have Alcohol Restored and Denatured. SEC. 19. Where the restoring and redenaturing is to be done in the presence of an officer at such intervals as the necessities of the business may demand, and when the manufacturer has a sufficient quantity of recovered alcohol on hand to justify the sending of an officer to his place of business, he may make application to the collector of the district for an officer to be detailed to supervise the work of redistilling or otherwise treating the recovered alcohol and the redenaturing of it.

Restoring, Redenaturing, and Gauging Alcohol. SEC. 24. The process of restoring the alcohol to a condition suitable for reuse will be carried on in the presence and under the supervision of the officer. If in the process of restoring the alcohol to a condition suitable for reuse it is necessary to remove it from the storeroom, it will be returned to said storeroom as rapidly as it is restored. If the alcohol is to be redenatured in packages, and said packages are to be stamped it shall be drawn off into suitable packages. The officer will, in having the packages filled with the restored alcohol, leave a wantage equal in volume to the denaturants to be added. He will ascertain by weight the wine and proof gallons in each package before any denaturant has been added. He will then cause the denaturants to be added to the package and will gauge, mark, stamp, and brand the package of redenatured alcohol.

The same kind of packages and stamps prescribed by these regulations for alcohol denatured at denaturing warehouses will be used for alcohol redenatured at storerooms for denatured alcohol. Packages of redenatured alcohol shall be numbered serially, beginning with number one, at each storeroom.

Alcohol Not to be Redenatured Unless Necessary. SEC. 34. Manufacturers who recover alcohol will not be required to have said alcohol redenatured if it retains a sufficient quantity of the original denaturants to prevent its use as a beverage. If necessary, this may be determined by the chemical examination of samples taken for this purpose and forwarded to the nearest laboratory. In the event it is not necessary to redenature the alcohol the manufacturer must deposit it in his storeroom in tanks or suitable packages and make application to the collector of internal revenue to have it regauged. The collector will detail an officer to visit the storeroom and regauge the alcohol. When it has been regauged the alcohol will be taken up on proper records by the officer and the manufacturer and will appear on the monthly reports in the same manner as though it had been redenatured. The officer making the regauge will make a report in the same manner as is required when alcohol is redenatured on the manufacturer's premises, except that the report will not show that the alcohol was redenatured.

Special Denaturants. ART. 25. The Commissioner of Internal Revenue will consider any formula for special denaturation that may be submitted by any manufacturer in any art or industry, and will determine (1) whether or not the manufacture in which it is proposed to use the alcohol belongs to a class in which tax-free alcohol withdrawn under the provisions of the law can be used; (2) whether or not it is practicable to permit the use of the proposed denaturant and at the same time properly safeguard the revenue. But one special denaturant will be authorized for the same class of industries, unless it shall be shown that there is good reason for additional special denaturants.

The Commissioner will announce from time to time the formulas of denaturants that will be permitted in the several classes of industries in which tax-free alcohol can be used.

Up to date the following additional formulas have been authorized, to wit:

To 100 gal. of ethyl alcohol add:

No. 12. One gal. of pyridin bases and 2 gal. of coal-tar benzol.

The pyridin bases must conform to the specifications set forth

in Sec. 26, Part I, and the benzol must conform to the specifications contained in formula No. 2*a*.

No. 13. Five gal. of sulphuric acid having a specific gravity of not less than 1.83 at 60° F., and 5 gal. of sulphuric ether having a specific gravity of not more than 0.728 at 60° F.

No. 13*a* (alternative). Ten gal. of sulphuric ether, having a specific gravity of not more than 0.728 at 60° F.

This alternative denaturant is authorized because of representations made by manufacturers to the effect that Formula No. 13 would give rise to many difficulties in the production of the anesthetic grade of ether. It is not as efficient a denaturing material, however, and internal-revenue officers are hereby instructed to exercise great caution in recommending the granting of permits for its use, both as to the standing and the responsibility of the applicant and the character of the premises described in the application. A very careful and close surveillance of such factories must be maintained.

The use of this alternative formula is further restricted to the manufacture of sulphuric ether containing not more than 4% of alcohol by weight, and section 40, Part VI, of the revised regulations, is amended accordingly.

No. 14 (alternative). Five gal. commercially pure methyl alcohol, and 10 lb. anhydrous zinc chloride.

The methyl alcohol must have a specific gravity of not more than 0.810 at 60° F.

No. 15. Three gal. of sulphuric acid having a specific gravity of not less than 1.83 at 60° F., and 1 gal. of kerosene having a specific gravity of not less than 0.800 at 60° F.

No. 16. Five gal. commercially pure methyl alcohol and 2 gal. benzol.

The methyl alcohol shall have a specific gravity of not more than 0.810 at 60° F.

The benzol shall be subject to the same specifications as are imposed in formula No. 2*a*.

17. Chloral hydrate manufacture, 100 gal. ethyl alcohol 0.05 gal. animal oil.

The above formulas have been authorized for use in the various industries as indicated in the following table:

Manufacture or preparation of—	Formula No.
Alkaloids and fine chemicals	16
Acetic ether	1
(Provided that the finished product contains not more than 6 per cent of alcohol by volume.)	
Barometer and thermometer tubes	1
Celluloid, pyralin, and similar products	2–2*a*
Confectioner's colors	1
Embalming fluids	1
Ethyl chloride	1–14
Filaments for incandescent electric lamps	1
Fine chemicals and alkaloids	16
Fulminate of mercury	6–6*a*
Heliotropin	1
Imitation leather	12
Jewelry and watches	1
Lacquers, pastes, and varnishes from soluble cotton	1–10
Moldings and picture frames	1
Monobromated camphor	9
Nitrous ether	15
(After the *tax-free* alcohol has all been converted into nitrous ether it will be permissible for the manufacturer to add alcohol in order to dilute the product so that it may be more readily transported, or for other purposes, but such added alcohol must in all cases be *tax-paid* alcohol.)	
Pastes, lacquers, and varnishes from soluble cotton	1–10
Pyralin, celluloid, and similar products	2–2*a*
Photographic collodion	11–15
Photographic dry plates	1
Photo enlargements and photo prints	5
Photo engravings	5
Postal cards in colors	1
Resin of podophyllum and similar products	1
Rubber, purification of	9
Santonine	9
Shellac varnishes	1
Shoe polish	1
Silverware and bronze	1
Soap, transparent	1–3
Sulphonmethane	8
Strychnine	9
Solid and powdered medicinal extracts	1
Sulphuric ether	13–13*a*
Surgical ligatures	1
Tannic acid	9
Thermometer and barometer tubes	1
Tobacco, smoking and chewing	4
Transparent soap	1–3
Varnishes, pastes, and lacquers from soluble cotton	1–10
Watches	1

CHAPTER XXII

APPENDIX

Transportation of Explosives and Inflammable Materials. The American Railway Association under the direction of Colonel B. F. Dunn, U. S. Army, chief inspector of the Bureau for the Safe Transportation of Explosives, and the U. S. Interstate Commerce Commission under date of Jan. 15, 1910, have formulated and published certain regulations for the safe transportation of explosives and inflammables. The particular purpose is that the shipper shall know the true characteristics of each shipment, and familiarize himself with the requirements of the regulations in order that he may inform the carrier by means of certain safeguards and the use of prescribed labels and certificates. Special supervision is given not only to the transportation of powder, dynamite and other heavy explosives, but it is now provided that special care shall be pursued in the handling of any material that gives off inflammable vapor at or below a temperature of 80° F.; materials subject to spontaneous combustion; materials other than acids, which are liable to cause accidents by friction, concussion, absorption of moisture, contact with organic matter and otherwise. Special rules also govern the handling of compressed gases as well as a list of eight of the more virulent acids and corrosive compounds.

The following regulations apply more specifically to the subjects embraced in this work, although the regulations in detail comprehend all materials likely to be offered for transport:

The following are forbidden for transportation: (*a*) liquid nitroglycerol; (*b*) dynamite containing over 60% nitroglycerol (except gelatin dynamite); (*c*) dynamite having an unsatisfactory absorbent or one that permits leakage of nitroglycerol under any conditions liable to exist during transportation or storage; (*d*) nitrocellulose in a dry condition in quantity greater than 10 lb. in one exterior package (see pars. 1557, 1560); (*e*) fulminate of mercury in bulk in a dry condition, and fulminates of all other metals in any condition; (*f*) fireworks that combine an explosive and a detonator or blasting cap.

" 1504. Smokeless powders are those explosives from which there is little or no smoke when fired. The group consists of smokeless powder for cannon and smokeless powder for small arms. Smokeless powder for cannon used in the United States at the present time consists of a nitrocellulose colloid, and is safe to handle and transport. Smokeless powders for small arms may consist of nitrocellulose, nitrocellulose combined with nitroglycerin, picrate mixtures, or chlorate mixtures.

" 1557. *Dry Nitrocellulose.* Inside packages containing not more than 1 lb. each of dry nitrocellulose, wrapped in strong paraffined paper, or other suitable spark-proof material, will be accepted for shipment if securely packed in an outside package that complies with General Rules D, E and F, and is marked as prescribed in paragraph 1559. Outside packages must not contain more than 10 lb. of dry nitrocellulose.

Smokeless Powder for Cannon. " 1571. *Packing.* Smokeless powder for cannon must be packed in tight boxes free from loose knots and cracks, or in kegs, that comply with General Rules D, E and F.

" 1572. *Weight.* Packages must not weigh over 152 lb. gross.

" 1573. *Marking.* Each package must be plainly marked on top ' SMOKELESS POWDER FOR CANNON.'

" 1574. *Car.* Smokeless powder for cannon may be shipped in any box car in good condition. The car must be placarded ' INFLAMMABLE ' as prescribed by paragraph 1663.

Smokeless Powder for Small Arms. " 1575. *Packing.* Packages of less than 9 lb. of smokeless powder for small arms must be inclosed in a tight box so that the filling hole of each inside package will be up, and the box must be marked on top as prescribed by paragraph 1578.

" 1576. Quantities of 9 lb. or over must be placed in packages that comply with General Rules D, E, and F. Kegs less than 9 in. long must be boxed as prescribed by par. 1541.

" 1577. *Weight.* Packages weighing over 31 lb. gross will not be received unless packed under the supervision of and shipped for the use of the United States Government.

" Packages weighing not over 30 lb. gross each may be inclosed in an outside package, in which case the gross weight must not exceed 150 lb.

" 1578. *Marking.* Each outside package must be plainly marked on top ' SMOKELESS POWDER FOR SMALL ARMS.' "

Inflammable Liquids include a group which gives off inflammable vapors at or below a temperature of 80° F., as determined from a flash

point taken with a Tagliabue Open Cup Tester as used for the testing of burning oils. Such are permissible for transportation only when placarded with a red label, and among such are the following:

INFLAMMABLE LIQUIDS.—RED LABEL

Name.	Flash Point. (May vary with purity.) Deg. F.	Maximum quantity (see Pars. 1814 and 1815) in one package which may be certified "No Label Required."
Acetone	35	½ gallon.
Alcohol, denatured	40–55	1 "
Alcohol, grain (ethyl alcohol)	57	1 "
Alcohol, wood (methyl alcohol)	45	1 "
Amyl acetate	70–95	1 "
Benzene	20	½ "
Benzole	20	½ "
Benzine	*0	½ "
Carbon bisulphide	*0	No exemption.
Coal-tar naphtha (light oil)	20	½ gallon.
Collodion	*40	½ "
Columbian spirits	45	1 "
Cologne spirits	60	5 gallons.
Ether	*0	5 pounds.
Ethyl acetate	40	1 gallon.
Ethyl chloride	*0	3 doz. 4½ oz. tubes
Ethyl methyl ketone	30	½ gallon.
Ethyl nitrite	*0	½ "
Gasolene	*0	½ "
High wines (proof spirits over 100 proof)	60–80	1 "
Lacquer (nitrocellulose solution)	20–70	½ "
Lacquer (shellac)	40–70	1 "
Leather cement	*0	½ "
Liquid bronze	*40	½ "
Naphtha	*0	½ "
Naphtha cement	*0	½ "
Nitrocellulose, solution	20–70	½ "
Nitrocellulose, wet with solvent	40	5 pounds.
Neutral spirits	57	1 gallon.
Nitroglycerin spirits	†60	No exemption.
Paint (bronzing, aluminum and gold)	*20–70	½ gallon.
Petroleum ether	*0	½ "
Petroleum naphtha	*0	½ "
Petroleum spirit	*0	½ "
Proof spirits	60–80	1 "
Pyroxylene (see nitrocellulose)	....	
Rhigolene	*0	½ "
Shellac, liquid	40–70	1 "
Soluble cotton (see nitrocellulose)	....	
Spirits glonoin (nitroglycerin spirits)	†60	No exemption.
Toluol Toluene	55	1 gallon.
Wood spirit	45	1 "

*At or below. †Approximate.

Inflammable Liquids—Red Label. "1822. Except as noted in pars. 1823, 1824 and 1825, all articles in this group must be packed: (1) In well-stoppered bottles of not to exceed one gallon capacity; or, (2) in boxed carboys or demijohns well stoppered; or, (3) in strong and tight barrels;[1] or preferably (4) in strong metal drums or vessels, or tank cars. All inside packages must be securely closed to prevent leakage or escape of contents and protected against breakage by shock. Bottles must be protected by corrugated paper wrappings or other elastic packing. A liquid with flash point below 80° F. must not be accepted in a can, unless crated or boxed. Tank cars containing inflammable liquids must be of an approved design, and they must be provided with satisfactory safety valves.

"1823. Nitrocellulose wet with solvent must contain not less than 30% of a solvent whose flash point is not less than 40° F., and must be packed in strong, tinned or galvanized iron vessels, of the milk-can type, with a satisfactory means for keeping them securely closed.

"1824. Spirits of nitroglycerin must not contain more than 10% of nitroglycerin in solution, and must be packed in tightly stoppered cans or glass bottles containing not more than one gallon of liquid each, and surrounded by a satisfactory absorbent.

"1825. The more volatile liquids, such as carbon bisulphide, ether, ethyl chloride, etc., must be packed properly in well-sealed metal tubes, cans, cylinders or drums. They may be packed in well-stoppered bottles containing not more than five pints, or in glass tubes of not more than 4½ oz. capacity.

"1826. Packages containing inflammable liquids must not be entirely filled. Sufficient interior space must be left vacant to permit expansion of liquid and vapor, and to prevent distortion of containers when heated to a temperature of 120° F.

Inflammables—Yellow Label. "1834. Yellow label packages must be tight and strong, and the interior packages must be so cushioned and secured that no rupture of either package can result from the ordinary shocks incident to transportation.

"1838. Nitrocellulose, uniformly wet with not less than 25% of water, must be wrapped in waterproof material, securely packed in a strong and tight box, keg or barrel, and marked 'WET NITROCELLULOSE—25 PER CENT WATER.'"

[1]Second-hand barrels must be carefully inspected and well coopered.

TEMPERATURE CORRECTION OF GAS VOLUMES, ACCORDING TO THE FORMULA

$$V_1 = \frac{V \times B}{760 \times (1 + \delta t)}.$$

WHERE $\delta = 0.003665$ AND $1 + \delta t =$ FROM 0° TO 30°C.

t.	$760 \times (1 + \delta t)$	t.	$760 \times (1 + \delta t)$	t.	$760 \times (1 + t\delta)$	t.	$760 \times (1 + \delta t)$
°C.		°C.		°C.		°C.	
0.0	760.000	4.0	771.1416	8.0	782.2832	12.0	793.4248
.1	760.2785	.1	771.4201	.1	782.5617	.1	793.7033
.2	760.5571	.2	771.6987	.2	782.8403	.2	793.9819
.3	760.8356	.3	771.9772	.3	783.1188	.3	794.2604
.4	761.1142	.4	772.2558	.4	783.3974	.4	794.5390
.5	761.3927	.5	772.5343	.5	783.6959	.5	794.8175
.6	761.6712	.6	772.8128	.6	783.9544	.6	795.0960
.7	761.9498	.7	773.0914	.7	784.2330	.7	795.3746
.8	762.2283	.8	773.3699	.8	784.5115	.8	795.6531
.9	762.5069	.9	773.6485	.9	784.7901	.9	795.9317
1.0	762.7854	5.0	773.9270	9.0	785.0686	13.0	796.2102
.1	763.0639	.1	774.2055	.1	785.3471	.1	796.4887
.2	763.3425	.2	774.4841	.2	785.6257	.2	796.7673
.3	763.6210	.3	774.7626	.3	785.9042	.3	797.0458
.4	763.8996	.4	775.0412	.4	786.1828	.4	797.3244
.5	764.1781	.5	775.3197	.5	786.4613	.5	797.6029
.6	764.4566	.6	775.5982	.6	786.7398	.6	797.8814
.7	764.7352	.7	775.8768	.7	787.0184	.7	798.1600
.8	765.0137	.8	776.1553	.8	787.2969	.8	788.4385
.9	765.2923	.9	776.4339	.9	787.5755	.9	798.7171
2.0	765.5708	6.0	776.7124	10.0	787.8540	14.0	798.9956
.1	765.8493	.1	776.9909	.1	788.1325	.1	799.2741
.2	766.1279	.2	777.2695	.2	788.4111	.2	799.5527
.3	766.4064	.3	777.5480	.3	788.6896	.3	799.8312
.4	766.6850	.4	777.8266	.4	788.9682	.4	800.1098
.5	766.9635	.5	778.1051	.5	789.2467	.5	800.3883
.6	767.2420	.6	778.3836	.6	789.5252	.6	800.6668
.7	767.5206	.7	778.6622	.7	789.8038	.7	800.9454
.8	767.7991	.8	778.9407	.8	790.0823	.8	801.2239
.9	768.0777	.9	779.2193	.9	790.3609	.9	801.5025
3.0	768.3562	7.0	779.4978	11.0	790.6394	15.0	801.7810
.1	768.6347	.1	779.7763	.1	790.9179	.1	802.0595
.2	768.9133	.2	780.0549	.2	791.1965	.2	802.3381
.3	769.1918	.3	780.3334	.3	791.4750	.3	802.6166
.4	769.4704	.4	780.6120	.4	791.7536	.4	802.8952
.5	769.7489	.5	780.8905	.5	792.0321	.5	803.1737
.6	770.0274	.6	781.1690	.6	792.3106	.6	803.4522
.7	770.3060	.7	781.4476	.7	792.5892	.7	803.7308
.8	770.5845	.8	781.7261	.8	792.8677	.8	804.0093
.9	770.8631	.9	782.0047	.9	793.1463	.9	804.2879

TABLE FOR CORRECTION OF GASES—*Continued.*

t.	$760\times(1+\delta t)$	t.	$760\times(1+\delta t)$	t.	$760\times(1+\delta t)$	t.	$760\times(1+\delta t)$
°C.		°C.		°C.		°C.	
16.0	804.5664	19.5	814.3153	23.0	824.0642	26.6	834.0916
.1	804.8449	.6	814.5938	.1	824.3427	.7	834.3702
.2	805.1235	.7	814.8724	.2	824.6213	.8	834.6487
.3	805.4020	.8	815.1500	.3	824.8998	.9	834.9273
.4	805.6806	.9	815.4925	.4	825.1784		
.5	805.9591			.5	825.4569	27.0	835.2058
.6	806.2376	20.0	815.7080	.6	825.7354	.1	835.4843
.7	806.5162	.1	815.9865	.7	826.0140	.2	835.7629
.8	806.7947	.2	816.2651	.8	826.2925	.3	836.0414
.9	807.0733	.3	816.5436	.9	826.5711	.4	836.3200
		.4	816.8222			.5	836.5985
17.0	807.3518	.5	817.1007	24.0	826.8496	.6	836.8770
.1	807.6303	.6	817.3792	.1	827.1281	.7	837.1556
.2	807.9089	.7	817.6578	.2	827.4067	.8	837.4341
.3	808.1874	.8	817.9363	.3	827.6852	.9	837.7127
.4	808.4660	.9	818.2149	.4	827.9638		
.5	808.7445			.5	828.2423	28.0	837.9912
.6	809.0230	21.0	818.4934	.6	828.5208	.1	838.2697
.7	809.3016	.1	818.7719	.7	828.7994	.2	838.5483
.8	809.5801	.2	819.0505	.8	829.0779	.3	838.8268
.9	809.8587	.3	819.3290	.9	829.3565	.4	839.1054
		.4	819.6076			.5	839.3839
18.0	810.1372	.5	819.8861	25.0	829.6350	.6	839.6624
.1	810.4175	.6	820.1646	.1	829.9135	.7	839.9410
.2	810.6943	.7	820.4432	.2	830.1921	.8	840.2195
.3	810.9728	.8	820.7217	.3	830.4706	.9	840.4981
.4	811.2514	.9	821.0003	.4	830.7492		
.5	811.5299			.5	831.0277	29.0	840.7766
.6	811.8084	22.0	821.2788	.6	831.3062	.1	841.0551
.7	812.0870	.1	821.5573	.7	831.5848	.2	841.3337
.8	812.3655	.2	821.8859	.8	831.8633	.3	841.6122
.9	812.6441	.3	822.1144	.9	832.1419	.4	841.8908
		.4	822.3930			.5	842.1693
19.0	812.9226	.5	822.6715	26.0	832.4204	.6	842.4478
.1	813.2011	.6	822.9500	.1	832.6989	.7	842.7264
.2	813.4797	.7	823.2286	.2	832.9775	.8	843.0049
.3	813.7582	.8	823.5071	.3	833.2560	.9	843.2835
.4	814.0368	.9	823.7857	.4	833.5346		
				.5	833.8131	30.0	843.5620

INDEX OF PATENTS

UNITED STATES

4874, 73, 773
11376, 699
17949, 682
23771, 699
27572, 869
31357, 869
31461, 576
31657, 574
35652, 576
38122, 706
43166, 73, 773
48231, 773
48239, 574, 699
50083, 73, 773
50359, 576
52659, 699
58223, 699
59888, 73, 773
60571, 74, 773
64117, 869
65267, 574, 773
76221, 575
76765, 576
77304,575, 719, 773
79261, 575, 773
83893, 702
86710, 763
86841,361, 575, 773
88228,575, 719, 773
88254, 720
88260,575, 720, 773
88633, 576
88634, 576
89253,575, 720, 773
89582,576, 577, 773
90765, 575, 773
90766, 575
91233, 576
91234, 576
91235, 576
91341, 577, 578, 582, 773
91377,146, 257,571, 572, 577, 773
91378,571, 572, 773
93594, 869
93757, 74
94454, 580
96132, 575, 773
97454,146, 257,299, 571, 572, 575, 773
101175, 146, 571, 572, 773
103209,364, 569, 773
105338,150, 578,579, 582, 773
105823, 575, 773
109725, 699
113055, 720
113272, 699
114242, 720, 773
117542, 255
121522, 720
123122, 994
126760, 699
127656, 773
128450, 74, 773,
132676, 869
133229,580, 581,582, 601, 630, 651, 682, 773
133969, 59, 578, 699, 773
133736, 699
133737, 699
136735, 699, 773
136953, 326, 773
138254, 660, 773
141654, 74, 773
143772, 575, 773
143865, 74, 119, 773
147588, 702
150722,352, 699, 773
151918, 1014
152232, 720, 773
153196, 773
156352,257, 581, 773
156353, 581, 773
156354, 682, 773
156355, 716, 773
156358, 150
162752, 661, 773
163939, 763
165234, 730, 773
168497, 255
169053, 763
170546, 746
171986, 869
172486, 699
172995, 73, 699, 773
173865,257, 720, 773
173999, 699
174000, 699
174001, 699
174002, 699
174206, 869
178479, 642
180133, 600
180666, 994
182431, 763
183550, 869
184481, 698, 773
184510, 522
184847, 869
187593, 730, 773
190363, 699
199908, 668, 773
199909, 711, 773
200914, 600
200939, 700, 773
201910, 1039
202441, 650, 773
203834, 736, 773
204227, 773
204228, 640, 774
204229, 652, 774
205271, 669, 774
205836, 774
205880, 670, 774
209570, 344, 774
210411, 363
210611, 108, 774
210612, 119, 774
210780, 731, 774
212864, 869
212865, 869
216474, 107, 774
217111, 731, 774
217232, 613, 774
217474, 74, 774
218122, 731, 774
219218, 737, 774
219235, 612, 774
219279, 730, 774
220 83, 701, 774
220502, 733, 774
221070,670, 678, 774
221977, 701, 774
223736, 1061
229477, 589, 774
232037, 653, 774
233558, 774
233851, 732, 774
233878, 701, 774
234675, 344, 774
235932, 728, 774
235933, 774
235953, 729, 774
235954, 698, 727,774
235958, 727, 729
235959, 729
236034, 682, 774
237168, 633, 774
237279, 774
237389, 869
237559, 728, 774
237779, 774
238927, 727, 774
239423, 774
239424, 774
239791, 774
239792, 774
239793, 662, 774
239794, 682, 774
241004, 732, 774
241005, 732, 774
244916, 617, 774
245952, 629, 774
246678,581, 588, 774
246891, 146, 774
247734, 774
248413, 690, 774
249600,130, 600, 774
251258, 649, 774
251259, 647, 774

251260, 663, 774
251410, 420, 774
251731, 749, 774
251938, 132, 774
253001, 701, 774
253480, 774
253840, 420, 774
254280, 682, 774
254439, 775
254751, 775
256596, 325, 775
256597, 325, 327, 420, 775
257607,520, 569, 775
258164, 869
258480, 702, 775
259826, 663, 775
259950, 869
262077, 146, 775
264987, 520, 622, 718, 775
265229, 600
265337, 429, 775
265837, 146
269340, 146, 150, 153, 300 301, 775
269341,148, 300, 775
269342,149, 300, 775
269343, 149, 162, 300, 581, 775
269344, 149, 150, 300, 775
269345,149, 300, 775
270538, 420, 775
271035, 735, 775
271493, 702, 775
271494,657, 673, 775
271495,657, 675, 775
271496, 675, 775
274335, 132, 775
274734, 580
275215, 670, 775
275216, 666, 775
276443, 613, 775
276948, 702
277693, 670, 775
277694, 635, 775
278321, 661, 775
278667, 637, 775
280659, 636, 775
280745, 654, 775
281529, 645, 775
282451, 739, 775
283224,672, 677, 775
283225, 683, 775
286212,307, 613, 775
286535, 672, 775
286541, 719, 775
288955, 702, 775
289239, 677, 775
289240, 667, 675, 702, 775
289241,430, 702, 775
289242, 667, 702,775
289338,370, 440, 775
290553,420, 677, 775
294557, 344, 775
294661, 690, 775
296967, 600, 775
296968, 775
296969, 589, 775
296970, 581, 775
297098, 421, 775
297770, 677, 775
297935,130, 601, 775
299388, 135, 775
299389, 712, 775
299390, 712, 775
299802, 649, 775
299804, 718, 775
299857, 794, 775
300158, 683, 775
301995, 775
306519, 134, 775
307032, 683, 775
307179, 763
307269, 763
309831, 683, 776
311203, 366, 776
320884, 776
322729, 703, 776
322802, 363
322803, 363
322805, 363
326119, 590, 776
328843, 658, 776
329093, 421, 776
329273, 684, 776
329313, 150, 776
330838, 703, 776
331241, 591, 776
331242, 593, 776
331713, 588, 776
333469, 657, 776
335935, 685, 776
336822, 776
341158, 171
341927, 171
342208, 776
343850, 134
343903, 703, 776
345083, 716
345982, 719, 776
345983, 776
346376, 741, 776
348222, 745, 776
349658, 81, 776
349659,130, 605, 776
349897, 670, 776
350049, 638, 776
350497, 106, 776
350498, 84, 106, 135
350577, 776
353697, 763
356108, 670, 776
360811, 387, 776
365768, 664, 776
366231,253, 256, 776
368277, 776
368501, 642, 776
369784, 665, 776
370546, 776
371021,150, 300, 776
371357, 995
372100, 150, 300
376247, 869
380654, 742, 776
381354, 301, 776
383272, 745, 776
383987, 367
384005,156, 317, 776
384190, 718
385777, 152
388287, 704, 776
392794,580, 707, 776
393079, 152
393750, 743
393751, 601, 776
393752, 601, 776
393753, 743, 776
394559, 460, 776
405874, 673, 776
406597, 104, 776
408344, 776
409044, 883
409345, 707, 776
410204,150, 156, 776
410205, 150, 156, 252, 776
410206, 150, 156, 252, 776
410207,151, 156, 776
410208, 151, 156, 741, 776
410209, 151, 156,776
410404,460, 469, 776
410598, 718
412545, 186
415566, 776
416710, 186
417202, 847, 848
417702, 776
417727, 678, 7 4, 745, 776
418136, 718, 776
418237, 104, 776
418787,703, 706, 776
419257, 704, 776
419258, 704, 776
419259, 704, 776
419260, 704, 776
419261, 704, 776
419262, 704, 776
419263, 704, 776
420445, 61, 74, 106, 776
420446, 74, 106, 777
420447, 61, 777
421367, 679, 777
421860,704, 706, 777
422195, 777
422302, 777
422303, 777
423303, 704
424129, 706, 777
425129, 705
425679, 705, 777
428654,156, 777, 840
430215, 74, 777
430520, 657, 777
434287, 106, 777
434330, 777
436787, 706, 777
439451, 642, 777
443105, 106, 777
444951, 846
444952, 846
450264, 156, 777
451847, 186
452966, 869
454281, 74, 777
455245, 75, 460, 777
455333, 710, 777
458020, 777
458157, 670
458663, 777, 848
459136, 846
459137, 846
459140, 869
460086, 687, 777
460629, 460, 777
465280, 74, 777
465784, 677, 777
468157, 777
470451, 151, 777
473306, 367
474788, 74, 777
474793, 152
474814, 743,777
478543, 169
478851, 718, 777
478955, 369, 777
481685, 186.
483701, 156, 777
488570, 661, 777
488630, 724, 777
490195, 346, 777
491880, 777,
493426, 869
494790,152, 157, 777
494791,152, 157, 777
494792,152, 157, 777
494793, 157, 777
495822, 869
491880, 369
498162, 777
498257, 777, 862
502546, 153, 777
502547, 153, 777
502921, 153, 777
503401, 153, 777

503402, 153, 777
503927, 869
504064, 777
504905, 153, 777
505399, 709, 777
505462, 724, 777
507279, 939
507749,152,153, 777
507964, 153, 777
508112, 608, 777
508124, 622, 777
508497, 750, 777
509124, 846
510617, 251
513791, 747, 777
514707, 869
514830, 120, 777
514838,120, 596, 777
516924, 130, 777
517275, 846
517987, 162, 251, 252, 777
518386, 153, 777
518387, 153, 777
518388, 153, 777
520030, 869
520770, 1001, 1055, 1066
521705, 869
525991, 869
526752, 135, 777
526786, 759
528140, 869
528812, 252, 777
530826, 993, 1000
531158, 460, 778
532468, 1034
534445,616, 665, 778
534446, 666, 778
535552, 152
536324, 186
536569, 869
540545, 869
541899, 57, 778
542452, 727, 778
542692, 258
543197, 255, 778
543198, 258
544480, 869
544924, 74, 778
546086, 186
546093, 869
546360, 694, 778
547066, 869
547775, 869
549309, 869
551456, 252
552209, 258
552934, 258
553270, 258, 778
553369, 869
555596, 153, 778
556380, 745, 778
559392, 471, 778
559783, 186
559823, 155, 778
559824, 155, 778
560367, 869
560424, 869
560425, 869
560771, 186
560800, 869
561624, 155, 778
562626, 473, 778
562732, 473, 778
563214,479, 518, 778
564343, 258
566349, 258, 778
568104, 258, 778
568105, 259, 778
568106, 259, 778
569875, 869
570728, 846
571496, 869
571530,491, 514, 778
572134, 258, 778
572135, 259, 778
573928, 778, 852
574147, 846
574851, 869
575153, 869
575761, 869
576542, 869
578185, 869
578355, 751, 778
579882, 869
580749, 869
582311, 869
583515, 778
583516, 259, 778
583517, 778
584228, 869
584305, 869
584311, 869
586953, 869
587096, 778
587097,429, 432, 778
587526, 869
587527, 869
587729, 869
588014, 869
588916, 869
589168, 869
589870, 597, 778
590766, 869
590837, 869
590842, 418, 778
591452, 869
591858, 869
592877, 719, 778
593376, 869
593787, 596, 778
594094, 869
594888, 517
595355, 151, 778
595620, 869
596662, 250, 778
596687, 869
597144, 582, 778
597759, 869
598648, 151, 778
598649, 252, 778
599631,778, 848, 849
600113, 869
600688, 846
600824, 778
601927, 751, 778
601951, 869
602159, 695, 778
602797,379, 751, 778
602961, 186
603001, 370, 778
603526, 692, 778
603771, 869
604181, 156, 778
604206, 1066
604733, 869
605185, 717, 778
606993, 869
607415, 646, 778
607554, 258, 778
607761, 869
607783, 869
608019, 152
608512, 721, 778
608726, 598, 778
608727, 597, 778
609475, 598, 778
610398, 846
610560, 869
610566, 598, 778
610615, 599, 778
610626, 763
610630, 718, 778
610728, 153, 778
610861, 846, 778
610953, 598, 778
611231, 869
611590, 869
611591, 869
611814, 517
612066, 398, 417, 626, 778
612067,398, 598, 778
612531, 598, 778
612553,388, 417, 778
613021, 968
613400, 599, 778
614366, 869
614367, 869
614514, 598, 778
615319,417, 418, 778
615446, 763, 778
617009, 497, 505
617435, 869
617450, 597, 778
617643, 869
619037, 696, 778
619617, 778, 848
620357, 869
621360, 718, 778
621382, 417, 418, 598, 778
621433, 598, 778
621434, 598
622087, 1099
622290, 598, 778
622291, 598
622292, 598, 778
622293, 698, 778
622294, 598
623410, 869
622451, 869
622727, 418, 419
625033, 520,
625313, 491, 779
625345, 517
625515, 779
626732, 599, 779
627031, 987, 1001
627493, 431
627526, 869
627952, 869
628413, 869
629063, 869
629582, 869
630944, 599, 779
630945, 598, 779
632163, 446
632408, 763
632472, 869
632605, 987, 1001, 1006,
634560, 869
635466, 869
635500, 869
635917, 675, 779
636642, 869
636715, 869
636716, 869
636717, 869
638647, 102
641623, 779, 1093,
641717, 869
642163, 869
643718, 869
645477, 869
645949, 869
646044, 1103
646351, 497, 502
646381, 497
646531, 504
646799, 497
646844, 763
647420, 52, 120, 779
647529, 869
648019, 869
648147,118, 128, 779
648389, 152
648415, 682, 779
649690, 763
649730, 869

650431, 735, 779
650715, 497
651364, 415, 779
651494, 869
651691, 869
652455, 941
652505, 941
652714, 869
654585, 869
654688, 756, 779
654988, 995, 1016
655706, 637, 779
656762, 869
656869, 779
657535, 779
657849, 1110
658632, 497, 502
660006, 869
661119, 869
661214,497, 502, 503
661516, 869
661795, 869
662444, 763
662961, 733, 779
663153, 869
663739, 486
663785, 869
664318, 763
665975, 485
666495, 869
666975, 779
667436, 869
667600, 735, 779
667618, 869
667635, 869
667759, 629, 779
669330,644, 659, 779
669331, 644, 779
670277, 846
671111, 869
671498, 869
672350, 497, 502
672710, 869
672711, 869
673329, 869
673665, 261
673992, 869
675451, 735, 779
675962, 869
676532, 869
677012, 623, 779
679203, 996
679204, 996
683177, 261
683343, 869
683910, 869
685551, 433, 779
685552, 433
687624, 869
688648, 869
688652, 869
689336, 1066, 1090
689337, 1093
689536, 734, 779
689857, 869
690815, 869
690915, 326, 779
691257, 497
691411, 869
691493, 869
692102, 72
692497, 996
692775, 996
693856, 869
695003, 869
695916, 869
696869, 869
697790,352, 417, 779
698125, 869
698254, 497
698761, 247, 779
699155, 534
699516, 713, 779
700140, 846
700709, 869
700881,253, 626, 779
700885, 626, 779
702163, 536
704082, 432, 779
704449, 869
705139, 262
705244, 20
705691, 539
705748, 497, 503
706113, 869
707270, 240, 779
707271, 240, 779
707934, 869
708148, 869
708303, 869
708456, 1001, 1058
708457, 1001, 1003, 1058
708760, 1069, 1103
708761, 1069, 1103, 1109
708813, 869
709342, 869
709922, 996, 999, 1039
710019, 837
710339, 869
710819, 512, 1058
711440, 869
711875, 779, 878
712200, 1034
712406,130, 492, 779
712462, 869
712756, 518
713168, 724, 779
713312, 869
713876, 869
713999, 522
714447, 715, 779
714845, 869
714880, 263
716138, 537
716778, 1087
717085, 763
717355, 1055, 1066, 1068, 1069
718484, 922
718670, 156, 779
719787, 1106
720931, 869
721150, 261
721261, 869
721718, 869
721954, 869
722382, 869
722393, 869
723089, 261
723147, 524
724020, 473, 779, 1063, 1069, 1084
724616, 1110
724932, 118, 779
725002, 265
725016, 1089
725879, 721, 779
725890, 241, 779
726614, 856, 779
727948, 869
729375, 869
729749, 524
729990, 1010
730514, 698
730964, 869
731282, 869
733729, 997, 1038
733741, 925
733742, 925
733972, 342, 779
734123, 996, 1016
734136, 869
734242, 869
735278, 758
735436, 779, 858
736957, 363
738533, 1016, 1022
739514, 779
740006, 419
740318, 869
741554, 156, 779
742405, 1016
742632, 869
743419, 869
743422, 629, 779
743727, 261
743922, 135, 779
744095, 265
744251, 869
745956, 869
746909, 327
747629, 246
747684, 869
747898, 265
748709, 519, 763
749297, 687
750048, 764
750502, 511, 1058
751076, 54, 779
752394, 869
753310, 840
758064, 763
758335, 256, 779
759332, 1064, 1090
759693, 869
762519, 869
762757, 118, 779
762948, 869
763266, 1066, 1070
764776, 91, 779
764788, 869
765580, 869
765621, 869
766167, 339
767421, 1075
767646, 619, 779
767682, 447
767944, 157, 779
768073, 358, 779
770100, 869
770705, 869
770937, 869
770940, 241, 779
771280, 869
772647, 869
773981, 869
774632, 869
774667, 987
774677, 1014
774713, 987, 1013
774714, 987, 1013,
775000, 869
776453, 363
776723, 869
777381, 869
778173, 1007, 1008
778232, 424, 779
779175, 499
779364, 869
779377, 246
779421, 55, 56, 779
779422, 779
779954, 869
781926, 944
783828, 434, 779
784474, 266
785205, 869
785237, 869
786343, 725, 779
786683, 869
789249, 432, 779
790565, 996, 1017, 1018
790601, 241, 779
790918, 921, 943
791385, 1090
791386, 1090
792149, 1034

792245, 869
792888, 499, 1065, 1090
794581, 307, 491, 779
795526, 497, 507
797373, 157, 172, 780
798027, 1063, 1078
798436, 947
798868, 518
799687, 950
801483, 241, 780
801485, 241, 780
803952, 627, 780
804191, 497, 503
804516, 172
804960, 987, 1015, 1028
805456, 1090
806131, 908, 911, 957
808148, 1078
809371, 519
809935, 996, 1018
809981, 869
811017, 356, 780
811044, 266
811341, 869
811523, 17
812098, 537, 987
812537, 869
812582, 266
812845, 869
812958, 951
813633, 869
813860, 869
813878, 515
814406, 869
814662, 869
814663, 869
815584, 869
815821, 968
816359, 261
816404, 1064
817141, 266
817188, 172
819514, 869
820351, 480, 780
820441, 869
822438, 869
822730, 869
823801, 266
823913, 869
825168, 925
825268, 721, 780
826112, 869
826146, 869
826165, 245, 780
826229, 997
826351, 1098
826524, 869
826781, 312, 672, 780
827434, 541
827674, 943
828155, 484, 780
831028, 251
831488, 251, 780
832112, 869
832605, 908, 911
833095, 247, 780
833658, 947
833666, 240, 780
834460, 482, 780
834913, 233, 370, 780
835209, 869
835296, 912, 966
835297, 912, 966
835298, 912
835501, 152
836452, 1063, 1080
836620, 499
836788, 519
837351, 403, 780
837463, 909, 911
837700, 401, 780
838350, 997, 998
838610, 869
838758, 513
839013, 497, 508
839014, 497, 508
839152, 869
839825, 498
840611, 498
840841, 423
841509, 400, 411, 780
842145, 484
842568, 497, 508, 509
844849, 356, 780
845374, 998
845551, 869
845616, 157, 780
846080, 268
846879, 1081
848301, 405, 780
848357, 440, 780
849018, 243, 780
849499, 869
849822, 532, 1083
849823, 1064
849870, 533
850266, 72, 298
850267, 951
850268, 951
850325, 951
850567, 869
850571, 515
850695, 499
851387, 869
852003, 1084
852126, 497, 509
852143, 949
853685, 265
853699, 869
854199, 869
854374, 987
855213, 1070
855869, 116, 780
856857, 497, 505
857069, 869
857640, 497
857697, 869
858660, 307, 780
860776, 116, 780
861169, 869
861832, 869
862559, 869
863517, 869
863793, 1062, 1066
864123, 859, 780
864314, 869
865106, 869
865593, 869
866371, 497
867185, 869
867682, 869
870504, 869
870829, 246
871750, 269
874181, 620, 780
874265, 130, 780
875062, 244, 780
875913, 56
875928, 56, 780
876137, 241, 780
876310, 241, 780
876901, 1073
879871, 116, 780
881827, 246, 754, 780
882114, 908, 947
882947, 265
884475, 1028
885151, 267
886883, 842
891033, 241, 780
891218, 992
891436, 758
892702, 675
892899, 250
892900, 250
893634, 625, 628, 780
894108, 628, 780
895639, 56, 780
896715, 1065
896962, 241, 780
897862, 260
898942, 241, 780
898943, 241, 243, 244, 780
899577, 943, 957
899855, 935
900204, 254, 780
900316, 248, 780
900744, 629, 780
901293, 248, 780
901708, 248, 780
901895, 264
902093, 987, 995, 1002
902404, 263
902464, 908
902465, 908
903047, 246, 780
903958, 901, 935
904250, 264
904636, 923
906668, 328, 780
907428, 243, 780
907685, 263
908171, 243, 780
908560, 869
908754, 514
909288, 432, 780
909404, 869
909534, 869
909546, 120, 780, 907, 946
910049, 264
910936, 947
910978, 246, 780
911070, 869
911710, 869
912137, 869
912365, 869
913328, 869
913530, 869
914300, 626, 780
914729, 869
915359, 869
916325, 869
916346, 869
916410, 869
916751, 869
916788, 869
917078, 869
917310, 869
917697, 869
918883, 869
918884, 869
919143, 267
919324, 869
919759, 1035
919867, 246
920263, 869
920828, 1025
920901, 869
921273, 869, 892
921537, 869
922302, 869
922743, 869
923432, 869
923511, 869
923589, 780, 842
923777, 1085
923967, 241, 780
924147, 869
925326, 869
925429, 265
925697, 869
926662, 869
927168, 361
928235, 405, 434, 780
930054, 247
931335, 265
931519, 265

931749,125, 780, 908
933645, 361
934214, 423, 780
934242, 869
934894, 869
935167, 869
935603, 681, 780
936842, 271
937174, 869
937367, 869
937746, 869
937928, 241
938287, 781
938629, 869
939135, 869
939274, 869
939337, 869
939350,781, 849, 863
939634, 869
939835, 781
939966, 760
940216, 908, 947
940479, 869
940580, 781, 967
941159, 1010
941605, 760
942395, 524, 781
942699, 760
942700, 760
942808, 760
942809, 760
942852, 760
943658, 1098
944372, 989
944500, 781
945109, 781
945559, 509, 781
946031, 869
946294, 781, 958
946475, 781
946745, 781
947715, 781
947965, 883
948731, 781
948790, 947
948814, 264
949671, 760
950352, 763
750392, 781
950435, 1084
951067,494, 780, 781
951110, 216, 781
951328, 216
951369, 266, 781
951507, 216, 781
951582, 320
953175, 781, 861
953319, 498, 1099
953454, 734, 781
953621, 346
954666, 760
953677, 781, 1005
953798, 956
953819, 1084
954310, 995
954984, 510
955082, 1005
956320, 265
956567, 781, 832
957137, 760
957460, 781
959692, 781, 880
960100, 781, 1108
960791, 509
960937, 879
960939, 781
961241, 1024
961360, 251, 781
962036, 296, 781
962769, 509
962770, 510
962788, 781, 837
962877, 253, 1021
964483, 781, 842
964524, 416
964964, 764
965273, 510
965557, 510
965823, 758
967397, 497
970589, 1064
970972, 849, 863
972464, 781, 999
972953, 781
974285, 781
974900, 781, 940
976211, 781, 951
979136, 781
979247, 781
979280, 781
979431, 781, 951
979434, 781
979560, 781
980294, 781
980648, 781
981574, 781
982370, 781
982467, 781
982524, 781
985406, 781

ENGLISH

1822
1433, 365

1846
11407, 73, 568, 782

1850
13296, 1057

1851
13713, 699, 782

1854
1638,574, 699, 782

1855
173, 782
283, 457, 782
309, 828, 782
320, 422
745,363, 699, 782
770, 782, 828
1765, 363, 782
1914, 828, 782
1974, 699, 782
2112, 782
2139, 782, 828
2358, 364
2359,145,150,297, 413,568,782
2802, 828

1856
607, 363, 571, 699, 782
624, 782
1123,145, 568, 782
1125, 297, 413, 568, 782
1159,571, 782, 828
1171, 782
1652, 361
1756, 362
1862, 361
2029, 782, 828
2072, 782, 828
2254, 782, 828
2256, 297, 782
2871, 782, 828

1857
500, 405
624, 828
653, 782
1883, 24, 413, 571, 699, 782
1884, 299, 571, 699, 782
1908, 362
3027, 360

1858
639, 299, 413, 699, 782
1090, 297, 782
2349, 699
2749, 364
2849,413, 699, 782
3066, 782, 828

1859
49, 405
734, 59, 413, 571, 782
945, 24, 571, 699, 782
1255, 782
1278, 207, 782
2293, 413
2295, 299, 782
2789, 413, 782

1860
1454, 24, 571, 782
2249, 297, 413, 414, 424, 571, 699, 782
2384, 413, 782
2775, 571, 782
3024, 782, 829

1861
955, 782, 829
974, 146, 782
1074, 782, 829
1089, 782, 829
2140, 699, 782
13542, 699

1862
158, 183
320, 123, 782
556, 409, 782
1403, 362
1712, 782
2598, 782, 829

1863
232, 413, 782
365, 571, 782
1057, 297, 782
1291, 207
2954, 782, 829

1864
1001, 360
2143, 299, 364, 783, 829
2347, 783, 829
2675, 145, 150, 569, 783
2953, 783, 829

1865
72, 783, 829
449, 783, 829
1102, 123, 783
1313,145,413, 569, 580, 783
2542, 413, 783
2733, 569, 783

3163, 24, 145, 569, 783

1866

1564, 569, 783
1592, 569, 783
1746,361, 624, 783
2709, 24, 145, 569, 595, 682, 783

1867

865, 569, 783
1695, 364, 395, 569, 783
1816, 571
2666, 571, 783
2966, 1057
3542, 783, 829
3652, 945

1868

536, 575, 783
741, 364, 365, 569, 783
1206, 783, 829
1366, 569, 783
1614, 569, 783
1717, 496
2489, 364, 783
3651, 146, 150, 569, 783
3984, 24, 146, 571, 783

1869

689, 360
1603, 146, 150, 582, 783
2022, 783, 829
2249, 413
2510,146, 150, 578
3102, 24, 146, 150, 299, 571, 783

1870

180, 571, 783
787, 571, 783
941, 783, 829
959, 783
1017, 59, 571, 783
1626, 571, 783
2101,569, 578, 783
2649,571, 699, 783
3617, 261

1871

1025, 578, 783
1879, 336
2070, 668
2430, 121, 783
2972, 414, 783
3178, 299, 783

1872

1443, 683, 783
2625, 424, 783
3101, 783
3103, 578
3447, 413

1873

1170, 59, 783
1610, 783
2802, 299, 783
3717, 783

1874

2262, 208
3612, 961

1875

718, 362
827, 496
1025, 578
1739, 146, 571, 572, 689, 783
2044, 783
2059, 783
2275, 361
2513, 748, 783
3766, 409, 783

1876

215, 207
1750, 362
2114, 408, 783
2515, 783
3605, 783
4806, 73, 783

1877

4771, 794
1008, 18
142, 783
1601, 783
3703, 783
3715, 578, 783

1878

36, 363
185, 496
878, 578, 784
2089, 402
2484, 308, 784
2519, 76, 784
2660, 794
3196, 784
3300, 784
4711, 487, 784
5057,107, 622, 784
5112, 784
5255, 784

1879

718, 364, 784
748, 870
959, 328
1865, 146, 784
1866,146, 784, 855
5223, 784, 829

1880

1112, 784
2162, 784
2322, 340, 784
2326, 784
3352, 202
3753, 784
4874, 732, 784
4933, 520

1881

814, 59, 784, 829
983, 429, 520, 569, 784
1559, 784
2226, 59
3072, 784
3376, 682, 784
3864, 784
5713, 1057

1882

24, 784
619, 899
775, 784
1423, 784
1816, 1057
1849, 327, 784
2073, 748, 784
2517, 202
2943, 626, 784
3072, 629
3749, 362
3750, 784
4458, 520, 784
6152, 428, 784

1883

24, 132, 784
33, 784
466, 414
983, 784
1765, 413
2326, 784
2481, 687, 784
2517, 206
3103, 1057
3662, 784
3866, 900
3930, 784
5554,378, 430, 784
28696, 1057

1884

1908, 674
3029,457, 520, 784
3141, 361
3171,362, 364, 784
3930, 683, 784
5191, 362
6051, 300, 365, 418, 784
7830, 409, 784
8642, 1057
10765, 687, 784
10864, 19
14587, 364, 784
15121, 687, 784
15217, 362
17045, 784

1885

491,365, 418, 784
2158, 398, 784
4349, 61
4668, 418, 784
4669, 216
5657, 419, 784
6045, 460, 784
7223, 398, 784
8012, 678, 784
8523, 152
8626, 363
8787, 363
8951, 960
9319, 18
11428, 262
11880, 361
12023, 20
12778, 784
15140, 1057
16805,457, 520, 784

1886

2210, 460, 784
2211, 460, 785
3645, 428, 785
4737, 260
5330, 947
5413,299, 350, 785
5793, 785
6167, 357, 785
8442,173, 749, 785
9874, 745, 785
10960, 261
13380, 785

1887

405, 785
2123, 428, 785
2694, 785, 879
2695, 530
3027, 360
3880, 312, 785
4833, 428, 785
4954, 318, 785
5152, 414, 785
5586, 302, 785
5791, 302, 785
6022, 61, 785

6870, 317, 785
7376, 302, 785
7377, 302, 785
7738, 707, 785
8253,301, 302, 785
11281, 785
15771, 302, 785
15772,302, 336, 785
15773, 785
16330, 625, 785

1888

487,150, 300, 785
1471, 900, 926
3008, 338
4608, 361
5055, 785
5270,460, 469, 785
6460, 57
7044, 785
9665, 749
10301, 261
11398, 261
13656, 60, 61, 785
14235, 361
16465, 785
16785, 785, 870
17691, 743, 785
17692, 601, 785
18362,120, 785, 968
18863, 928

1889

1115, 959
2570,365, 479, 785
2571, 479, 785
4477, 928
5344, 157, 298, 414, 785
5614, 928
7716, 503
9267, 682
9879,365, 487, 785
10376, 927
10393,785, 840, 842
11664, 928
11665, 54, 785
12309, 414, 785
17496, 655, 785
18016, 842
18090, 682
19896,785, 839, 842
19897,785, 839, 842
20964, 79, 745, 785

1890

9893, 840
1656, 460, 785
1765, 521
1897, 415, 785
3004, 361
3393, 785, 844
3725, 522
3836, 858
4178,785, 840, 844
4452, 10
5364, 79
5376, 90, 460, 785
5378, 785
7376, 302
9315, 785, 840
9893, 785, 849
11945, 785, 866
12684, 302, 785
13191, 785, 844
13836, 785, 844
13864, 364, 785
14625, 54, 785
15687, 186
17012, 745, 785
18119, 485, 785
18989, 395, 785
19160, 208
19658, 785, 839
20690, 414, 786
20973, 61
20978, 60, 786

1891

48, 186
122, 409, 786
336, 61, 786
376, 786, 870
1670, 349, 786
3342, 744, 786
3345, 369, 786
3892, 415
4129, 74, 786
5586, 743
6921,786, 840, 844
8823, 326, 786
9869, 397
10747, 91, 786
11383, 959
11831, 471, 786
13612, 90, 786
18413, 311
19456, 346, 786
19560, 78, 460, 786
19710,378, 387, 786
22115, 349, 786
22262,421, 423, 786
22610, 308, 786
24638, 460, 786

1892

4167, 743, 786
4169, 308, 786
5597, 786, 844
6543, 152
7501, 786, 839
7688, 308, 786
8700, 1055
9284, 78, 786
9889, 401
10675, 727, 786
12732, 327, 786
15967, 409, 786
17927, 204
18932, 378
19242, 414, 786
20880, 125, 786
21485, 485, 629
22736, 473, 786

1893

580, 939
3469,369, 430, 786
3557, 786
4214, 861
5504, 858
5674, 409, 786
6501, 786, 873
7277, 227, 786
7784,157, 227, 786
8956, 786
13613, 186
14274, 837
15686, 397, 786
17703, 186
17781, 186
19810, 786, 843
19854, 349, 786
20234, 411
21455, 786
22137, 786
22384,120, 596, 786
24003, 473, 786
24638, 62, 460, 786
24695,397, 786, 843

1894

409, 1066
1216, 207
1372, 394
2221, 362
6032, 786
6687, 786
6988, 362
7180, 786
8558, 484, 786
9261, 419, 786
9676, 1001, 1028
11390, 786
11666,298, 751, 786
13139, 311, 786
14697, 361
15327, 329, 786
15522, 517
15914,253, 366, 786
17001, 786
17544, 261
17747, 751, 786
18683, 135
19175, 387, 787
20281, 57, 787
20521, 186
21331, 252, 787
21729, 114, 787
22019, 72, 366
24009, 473, 787
24235, 72, 787

1895

417, 186
1284, 503
4018, 186
4760, 118, 787
4769, 78, 787
4940, 261
8215, 364, 787
9264, 419, 787
11038,357, 521, 787
11821, 787, 837
12892, 943
13562, 387, 787
21668, 361
21995, 412, 787
22138, 787, 882
22351, 207

1896

877, 378
1573, 787
1858, 130, 486
2568, 346, 787
2595, 473, 787
4062, 408, 787
4713, 1055
6289, 961
6389, 625, 787
6858, 485, 787
8069, 364, 787
9521, 186
10103, 751, 787
10104,416, 751, 787
10105,415, 751, 787
10868, 473, 787
11182, 415, 787
12056, 520
12451, 362, 414, 687, 787
12693, 415, 787
12870, 429, 787
14884, 262
15852, 787
16311, 939
18283, 1000
19588, 787
22029, 1000
22139, 186
22540, 537, 787
22965, 364, 787
24132, 320, 787
24568, 186
25369, 429, 787
25675, 328, 787
25779, 787
25809, 366, 787
26695, 1108
28147, 186
28613, 157, 787

29261, 787, 879
30161, 787

1897

633, 415, 787
758, 429, 787
2667, 399
2713, 517
3832, 536
5762, 362
6769, 787, 887
7330, 356, 787
7867, 787, 873
7975, 416, 787
9659, 401, 787
10098, 787
11053, 787, 843
15693, 787, 903
17122, 787, 878
17302, 72, 787
17602,416, 429, 787
21543, 787
22190, 931
24978, 397
26381, 358, 787
26677, 430
27534, 415, 787
28467, 186
28613, 366, 787
28631, 496, 501

1898

110, 328, 787
1020, 1087, 1099
1021, 1087, 1099
1022, 1087, 1092, 1099
2816, 152
2868, 413
2869, 413
3493, 358, 787
3770, 358, 787
3898, 487, 1084
4445, 787, 849
4631, 414
5286, 51
6700, 517
6858, 788
10432,362, 412, 788
11927, 628, 788
12553, 404
12867, 72, 788
15140, 262
18002, 59, 788
18283, 987, 1001
18697, 788, 1093
18868, 52, 120, 788
19806, 965
20660, 788
22029, 987, 1001
22268, 399
22674, 419, 788
24136, 943
24750, 788
24768, 61, 788

1899

58, 536
63, 358, 788
3164, 508
5793, 858
6557, 497, 506
6641, 497, 502
6656, 60, 497, 788
6735, 497, 506
9577, 267, 1103
10071, 939
11181, 395, 788
12077, 358, 788
12152, 788, 870
12157, 147, 788
12515, 788, 878
12516, 878
12879, 531
13287, 255, 788
13331, 500
14525,498, 788, 862
15355,763, 788, 840
16247, 758
17883, 415
18260, 18, 497, 520
18802, 207
18884, 497
19683, 788
20092, 325, 788
20630, 497, 506
22085, 307, 788
22152, 788, 838
22186,412, 762, 788
22391, 421, 788
22867, 733, 788
23059, 788, 843
23449, 965
23729, 485, 788
24101, 497, 502
24561, 91, 788
25069, 207
25434,254, 255, 788
25519, 747, 788

1900

249, 788, 883
2770, 788
4303, 497
5830, 119, 788
7617, 516
8088, 788
8578, 788, 877
8789, 486
9087, 491, 788
9088, 358, 788
11526, 407, 788
11663, 1099
11664, 1099
11749, 995
11761, 255
11929, 94
13131,253, 256, 788
14114, 262
14475, 721, 788
14754, 247, 788
15343, 485, 788
16332,415, 486, 788
17253, 1106, 1109
17759, 522
17948, 255
18374, 418
19039, 6
20461, 473, 788
20723, 254, 788
20801, 497, 502
21535, 397, 788
23158, 536
27948, 253

1901

50, 1108
536, 415, 788
872, 254
1160, 763
1934, 747, 788
2339, 491, 788
3062, 364, 788
3592, 1055, 1066, 1068, 1069
3861, 788
4326, 254
4369, 366, 788
4593, 961
5076, 130, 788
5596, 81
6246, 312, 788
6507, 362.
8063, 352, 415, 417, 788
8072, 254, 788
8076, 412
8280, 42, 416
8301, 626, 788
8728, 350, 788
8923, 208
10213, 256, 788
10663, 208
12695, 487, 789
12863, 249, 789
14420, 362, 408
14981, 687
16429,394, 430, 789
16930, 262
18063, 789
19249, 361
19912, 1110
20253, 350, 789
20396, 1080, 1109
20397, 1069, 1103
20398, 1103, 1108
20747, 358, 789
21628, 1016
22662, 253, 789
25994, 152, 923
26071, 1016
26075, 1016

1902

2036, 735, 789
2037, 735, 789
2052, 725, 789
2476, 534
2529, 1089
3177, 91, 789
4383, 254
4886, 993
5348, 311
5541, 261
7088, 995
8083, 512, 1058
9304, 442, 789
9481, 920
9868, 1008
9936, 152
9962, 837
9992, 789
11042, 789
11054, 325, 789
11164, 995
11505, 322, 789
12818, 789, 843
12880, 759
13112, 421, 789
14122, 416
14699, 207
15545, 364, 789
17311,312, 789, 844
17485, 789, 878
17501, 1062
17502, 1069
17503, 1069
19437, 789, 859
21171, 54, 789
21537, 789
22427, 262
23445, 254, 789
24234, 789, 878
24955, 394, 575, 789, 843
25243, 789, 861
25324, 407
25362, 340
25821, 789, 1016
26982, 536
28284, 789, 843
28384, 537

1903

457, 929
786, 968
2592, 939
3033, 309
3045, 408, 789
3485, 412, 789
4863, 1011
4902, 430, 789

5837, 429
5887, 789
6409, 91, 789
7023, 1087
7058, 81
7269, 126, 789
7341, 995
7346, 996, 1016, 1033
7695, 925
7712, 925
8278, 789
8498, 789, 878
9017, 526
9480, 940
9849, 1109
10243, 993
11712, 410
13457, 902, 944
14073, 789, 878
14827, 947
14974, 262
15696, 356
16060, 262
16604, 1072
16632, 416
17270, 362
17415, 911
18300, 262
18599, 416, 789
19541, 419
21103, 262
22299, 619, 789
22970, 629, 789
21030, 1066, 1070
23722, 789, 878
23752, 763, 789
24289, 422, 789
27202, 412, 789
27515, 120, 789
28212, 626, 789

1904

116, 78, 789
925, 789, 840
1930, 362
2167, 417, 789
2357, 1070, 1075, 1084
4028, 947
4994, 789, 878
5126, 116, 789
5280, 762
5730, 1064
5948, 789, 842
6353, 947
7511, 91, 789
8041, 947
9277, 627, 789
9828, 350, 789
9962, 298, 672, 699, 789
10663, 911, 966
11000, 950
12627, 54, 789
13485, 422, 789
14383, 408
15053, 942
15629, 366, 790
17152, 1080
17199, 840
18269, 931
18742,233, 370, 790
20637,488, 491, 790
21988, 499
22245, 687
22381, 626, 790
24083, 993, 998
24246, 790
24774, 790, 843
25296, 518
26666, 91, 790
27357, 417, 790
27565, 480, 790
28143, 409, 790
28376, 936
28733, 1016, 1033
29620, 340

1905

1283, 497, 503, 505
1284, 497
1501, 497, 508
1686, 484, 790
1745, 506
1745, 497
2192, 536
3725, 966
4534, 493
4746, 497, 508
4755, 497, 507
4761, 497, 507
4765, 497, 508
5766, 1072
6356, 497, 508
6473, 406, 790
6751, 987, 1015, 1028
6783, 486, 790
8297, 244, 790
8617, 271
8875, 759
9998, 998, 1004
10319, 620, 790
10372, 842
10435, 199
11512, 251, 790
12460, 339
12892, 937
15029, 535
15517, 759
15564, 901
15565, 935
16088, 513
16583, 1063
17152, 1075
17381, 515
21505, 61, 790
21779, 943
23920, 91, 790
25081, 907
25939, 943
26201, 524

1906

1939, 1025
2037, 251
2902, 117, 790
2906, 532
3013, 407, 790
3025, 541
3211, 499
3412, 266
3449, 56, 790
3450, 56, 485, 790
3486, 324, 790
3509, 356, 790
3549,497, 498, 508
3566, 497
3661, 923
3889, 208
4057, 947
4114, 950
5032, 241, 790
6072, 515
6166,485, 490, 790
6314, 947
6590, 419
6606, 246, 790
6640, 198
6942, 499, 530
7346, 995
8045, 1084
8077, 250, 255
8167, 629, 790
8260, 241
8260A, 239, 790
8356A, 239, 790
8358, 241
9254, 499
10094, 1063
10228, 255
10228A, 250, 790
10407, 243, 790
10798, 246, 790
10927, 950
10999, 246, 790
12630, 790
12639, 246
14255, 996, 997
15133, 513
16078, 513
16088, 497, 509
16271,250, 256, 790
16429,240,241, 790
16442, 498
16495, 505
16598, 432
16676, 102
16725,120, 790, 946
17573, 244, 790
17891, 947
18280, 247, 790
18499, 401
19107, 995
19408, 901
19960, 241
19961, 241, 790
20037, 255, 790
20638, 1111
21171, 240, 790
21180, 240, 790
21493, 411
21590, 423
22056, 423
22422, 514
22783, 130, 790
22810, 241, 790
23875, 242
23875A, 247, 790
24830, 246, 790
25647, 538
26502, 1016
27527, 536
27727, 515
28053, 943

1907

89A, 486, 790
592, 416, 421
791, 901
1454, 790, 842
1595, 493, 790
2286, 950
2461, 790, 879
2511, 1005
2998, 1092
3103, 995
3606, 542
4015, 542
5020, 493, 790
5238, 268
5891, 628, 790
7382, 423
7749, 423
8757, 243
9568, 621, 790
10164, 499
10165, 498
10545, 498
10783, 241, 790
10784, 241, 790
12378, 966
13023, 251, 754
13518, 524
13868, 513
14549, 243, 790
14550, 243, 790
14690, 124
15536, 356, 790
16512, 533
16605,241, 247, 791

17460, 489, 791
21117, 947
21405, 791, 1064
21880, 599, 791
21946,242, 243, 791
22092, 497, 503
22129, 246, 791
22371, 1084
24214, 791, 885
24284, 1024
24806, 245, 791
25453, 241, 791
26915, 1035
27707, 503
27927, 244, 791
28009, 758
28028, 248, 791
28036, 243, 791
28743, 440, 791
28756, 791, 851

1908

117, 968
413, 246, 791
858, 520
1265, 500
1682, 247, 791
1689, 841
1936, 246, 791
2794, 514
3252, 791, 880
3750, 244, 791
4359, 247
4390, 626, 791
5513, 243, 791
5674, 241, 791
7430, 76, 791
7629, 731, 791
8023, 1091
8542, 629, 791
8708, 1092
9044, 791, 881
9268, 503
9313, 749
9693, 881
9982, 626
9992, 791
10129, 951
11248, 245, 791
11959, 513
12174, 366, 791
12253, 530, 791
14143, 497, 498
14408, 247, 791
14752, 246, 791
15015, 532
16114, 791, 862
16557, 528
17432, 791, 886
17433, 791, 886
17967, 516
18047, 243, 791
19157, 531, 1080
19158, 531, 1080
19735, 791, 1012
20050, 243, 791
20548, 518
21191, 525
21566, 760
21839, 791, 881
23192, 60, 791
24627, 328, 791
24809, 505, 791, 1095, 1103
24811, 421, 791, 1103
24922, 528
25549, 352
26469, 416
26593, 416, 791
26682, 676, 791
26708, 248
27201, 626, 791
28149, 497, 498

1909

376, 791
1715, 791, 886
2400, 494
3937, 951
4104, 509, 516
4130, 361
4592, 266
5598, 352
6554, 1005
7322, 243
7743, 994, 1024
8945, 1014, 1022
10604, 470
10611, 882
11625, 487, 1027
11700, 516
12687, 1106
12976, 1022
13328, 791, 1095
14039,791, 862, 863
14112, 510, 516
14407, 863
14743, 880
14950, 791, 863
15190, 505, 791, 1096
15281, 791, 1095
15306, 1108
15855,252, 255, 791
16010, 676, 791
16199, 415
17009, 791, 859
17036, 1005
18086, 527
18087, 527, 791
18193, 1031
18694, 791
19692, 296, 791
19772, 423, 791
21099, 865
22413, 525, 791
23547, 704, 792
24556, 863
26657, 626, 792
27102, 989, 1023
28256, 516
28259, 516
28598, 762, 792
29273, 883

1910

476, 1013
1107, 792
1441, 1021
3198, 792
3559, 994
3603, 792, 862
4086, 792
4912, 883
4959, 1021, 1023
5377, 883
8769, 792
11365,792, 937, 951
11729, 495
13100, 792
13692, 792
14271, 792
14364, 792, 1014, 1023
15700, 503, 1005
16492, 957
16932, 792, 1014, 1021
18606, 792
18607, 792
19166, 485, 792
20672, 999
21628, 1016
23138, 792
24707, 792
24980, 792, 1005
25986, 500
26075, 1016
27258, 1021

1911

309, 792
406, 792
849, 792
1022, 792
1436, 792
1556, 792

FRENCH

41405, 791
71871, 569
85369, 571
86144, 575
86546, 575
88556, 489
88898, 571
90752, 578
110571, 699
125309, 1062
155745, 1062
132495, 146
141345, 946
144257, 520
147325, 959
165349, 458, 460
172207, 460
177524, 746
184548, 302
185179, 926
188304, 469
192683, 946
194905, 968
195654, 479
195655, 479
195656, 479
198946, 928
199091, 926
199494, 460
200275, 928
201740, 460
203202, 460
203741, 496
207624, 460
208405, 460
208856, 479
208857, 479
212433, 743
213983, 94
216156, 460
216564, 460
217557, 514
218759, 622
219538, 527
221488, 460
221901, 473
224460, 473
225567, 460
227034, 1055
231230, 460, 471, 489, 535
233266, 843
233727, 153, 329
243546, 1001
243612, 473
243677, 473
247855, 489
248830, 517
256854, 485, 491
258257, 485
261540, 1055
272718, 496, 501
273906, 842
280248, 1004
282135, 946
282136, 946
282320, 1001
286692, 497

286726, 497
286925, 497
292983, 255
296811, 623
303812, 247
304143, 1106
308372, 254
308506, 999, 1001, 1038
309541, 1072
309548, 1069, 1070, 1102
309962, 254
309963, 255
310942, 256
312817, 249, 255
312846, 687, 764
313464, 1080
314554, 1080
316062, 191
316500, 993, 1038
317007, 996, 1016, 1033
317008, 1016
317094, 1062, 1069
317607, 764
317884, 625
319542, 712, 762
319724, 987, 995
319926, 763
320446, 512, 1058
320451, 837
320452, 840
320478, 1103
320885, 995
320931, 763
321803, 358
321821, 320
322457, 626
322506, 250
323473, 1062, 1069
323474, 1062, 1084
323475, 1062, 1069
324121, 1011
324894, 690
325507, 947
326037, 948
326576, 408, 764
327136, 60, 61
328179, 1111
328357, 325
329540, 923
330714, 1015, 1032, 1033
330753, 1087
331066, 925
331067, 925
331176, 60, 61
333426, 523
333443, 950
333824, 356
333835, 1110
334507, 511
334515, 1069, 1084
334636, 1066, 1069
335584, 739
336970, 687
339504, 248
339564, 1084
340268, 252
340563, 1075
340622, 318
340690, 1075
340812, 1064
341007, 1031
341013, 759
341173, 482, 493
341556, 252
341832, 266
342077, 480
342112, 517
342602, 91
342655, 486, 526
343464, 762
344048, 627
344501, 625
344660, 488
344845, 469
345274, 1080
345343, 1084
345373, 1084
345398, 759
345687, 498
346673, 261
346693, 484, 489
345764, 998
346722, 497, 507
347303,318, 629, 765
347353, 60
347446, 625, 626
347533, 61
347702, 60, 61
347903, 993, 998
347960, 497, 508
348015, 325
348137, 325, 523
349134, 489
349292, 629
349620, 523
349852, 242
349884, 669
349896, 240
349970, 251
349992, 947
350041, 422
350187, 862
350220, 499,
350288, 526
350290, 492
350298, 492
350313, 169
350383, 484
350442, 1016, 1033
350723, 484
350888, 508
350889, 497, 502
351089, 1075, 1107
351206,497, 503, 523
351207, 497, 524
351208, 497, 503
351265, 536
351555, 626
352298, 387
352528, 497, 508
352853, 253, 582
352888, 243
352896, 1015, 1028
352897, 987, 1015, 1028
353065, 244
353187, 497, 507
353919, 244
353995, 759
354389, 620
354398, 461
354424, 490
354425, 272
354807, 199
354942, 763
355016, 485
355064, 498
356323, 535
356402, 497, 507
356404, 518, 519
356504, 516
356508, 519
357056, 1063
357151, 515
357172, 515
357837, 497, 508
358079, 996
358827, 328
358987, 490
359001, 719
359044, 169
359625, 94
359768, 840
360395, 485
360715, 208
360787, 935
360912, 627
361048, 514
361061, 497, 508
361319, 1084
361323, 327
361324, 486, 532
361329, 486, 532
361394, 309
361539, 759
361759, 519
361954, 840
361960, 526, 530,532
362721, 1025
362956, 243
362986, 525, 629
363090, 255
363506, 266
363846, 252
363848, 252
363949, 498
364066, 515
364349, 117
364413, 901
364444, 246
364504, 749
364559, 719
364604, 251
364641, 407
364690, 629
364912, 527
364913, 546
364973, 943
364981, 96
365067, 499
365297, 252
365619, 199
365814, 246
365974, 243
366106, 250, 252
366586, 407
366793, 530
366891, 672
367803, 491, 494
367945, 943
367979, 513
368004, 628
368190, 533
368383, 432
368766, 995
369123, 994, 1033
369170, 488, 491
369797, 749
369320, 401
369402, 498
370293, 246
370505, 1111
371356, 995
371358, 995
371447, 1016, 1017
371544, 536
371985, 494
372267, 157
372512, 253
372584, 1099
372599, 765
372603, 186
373273, 621
373887, 531
373947, 534
373994, 992, 994
374123, 1061
374277, 498
374370, 995
374375, 629
374395, 253
374724, 538
374790, 530
375564, 402
375827, 514
375897, 241
376065, 498
376262, 1005

376269, 251, 754
376399, 628
376578, 994, 1033
376897, 241
377010, 253, 1011
377118, 514
377311, 241
377424, 1085
377425, 96, 118
377671, 249
377673, 492
377926, 243
378143, 489
378305, 837
379509, 118
381195, 312
381226, 248
381529, 388
381637, 843
381939, 497, 498
382279, 412
382718, 529, 530
382790, 248
383064, 1026
383149, 245
383411, 532
383412, 498
383413, 498
383419, 243
383478, 248
383555, 485
383557, 243
383558, 243
383636, 781, 994, 1024
384111, 860
384112, 860
384955, 241
385341, 243
385342, 245
385352, 244
385552, 247
385700, 241, 244
385900, 440
386339, 500
386347, 246
386552, 241
386627, 760
386628, 760
386845, 861
386928, 241
387053, 244
387054, 494
387179, 253
387537,253, 626, 757
387612, 951
387791, 861
388097, 749
388492, 411
388755, 862
388915, 1091
389071, 242
389092, 248
389284, 1068, 1069
389327, 247
390381, 951
390422, 266
390572, 843
391785, 861
391897, 860
392011, 243
392179, 524
392182, 246
392270, 366
392442, 532
392505, 844
392868, 497
392869, 497
392870, 416
393224, 863
393310, 599
393504, 246
393627, 851
393764, 328
393963, 1012, 1031
394009, 531
394467, 274
394492, 948
394586, 1063
394992, 908
395165, 680
395402, 517
395665, 861
395788, 322
396305, 1004
396467, 1022
396664, 494
396814, 411
397051, 758
397161, 243
397429, 626, 1011
397707, 102
398028, 312
398361, 248
398424, 1080
399218, 530
400180, 274
400577, 1063
400739, 862
401182, 494
401228, 1016
401262, 492
401343, 533
401741, 525
401912, 842
402028, 1012
402083, 1022
402197, 78
402460, 436
402462, 470
402569, 626
402804, 1071, 1083
402950, 486
403193, 519
403242, 527
403264, 553
403488, 499
404372, 516
405293, 1005
405429, 505
405430, 421
405571, 502
405782, 528
405819, 137
405822, 958
406005, 247
406139, 763
406344, 1080
407345, 553
407654, 366
407846, 713
407862, 307
407932, 1032
408065, 240
408303, 459
408370, 1029, 1031, 1034
408406, 626
408592, 763
409220, 95
409387, 528
409465, 989, 1023
409557, 253
409789, 516
410055, 496
410239, 907, 946
410267, 526, 792
410460, 560
410652, 488
410721, 524
410776, 1068
410793, 626
410827, 525, 540
410882, 516
410986, 862
411126, 1022
411298, 1013
412503, 994
412797, 1021
412887, 495
413152, 748
413359, 495
413571, 493
413657, 1012
413658, 1012
413671, 994
413901, 1021, 1023
414518, 791
414520, 1083
414594, 791
414679, 1012
414680, 1012
415003, 514
415517, 1013
415518, 1013
415566, 842
415737, 792
415945, 870
416752, 1025
416843, 781
417027, 1034
417250, 1023
417274, 1023
417599, 1023
418309, 792

GERMAN

3181, 19
6802, 362
6828, 107
F–12805, 996
L–15737, 993
17677, 362
23808, 168
38368, 460
40373, 518
41507, 251
41678, 178
43098, 877
46125, 460
47599, 186
51022, 149, 208
52977, 479, 491
55293, 487
55949, 471, 491
56331, 460
56655, 460
58508, 471, 491
61044, 743
62362, 186
64031, 460
70999, 1055
72572, 514
72998, 186
77299, 186
80158, 186
80776, 249, 252
81599, 460
82555, 473, 491
82857, 514
84336, 186
85329, 993, 1001, 1004, 1037
85564, 10
85588, 759
85886, 763
86368, 1001, 1004, 1037
86447, 186
87130, 186
88225, 517
90291, 186
92590, 1058
93795, 517
93797, 625
94019, 186
96208, 536
96365, 412

97710, 251
98602, 485
98642, 496, 501
99256, 186
99570, 758
101844, 536
102573, 536
105347, 1001, 1004, 1037
106293, 517
107637, 763
108511, 1087
110012, 628
111313, 497
112685, 758
112817, 1001
114278, 763
115681, 673, 763
115856, 1062
116628, 723
117349, 118
117461, 1103
118052, 255
118538, 995, 1037
118554, 1103
118758, 995
119636, 255
120713, 995, 1004
122033, 994
122166, 254
122272, 255
123121, 996, 999
123122, 996
125309, 1069
125315, 253
125416, 1103
125917, 840
125947, 1072
127422, 1109
127816, 253
127942, 763
128119, 254
128120, 254
128956, 254
129426, 1069
132371, 249
133144, 1069, 1070
133427, 1058
134312, 1058
134553, 247
137891, 729
138511, 1108
138783, 764
139589, 254
139669, 987, 994, 1037
139738, 253
139905, 764
140155, 255
140164, 254
140263, 256
140480, 255
140552, 758
140885, 256
141309, 763
142832, 254
142971, 254
144646, 254
145106, 1014
145743, 137
147994, 763
148889, 1058
149764, 626
150366, 308
152111, 1015
152743, 1080
153228, 764
153350, 1017
153671, 488
153817, 1080
153924, 241
154475, 877
154507, 513, 1058
154575, 207
154657, 172
155745, 1069
157157, 513, 1058
158310, 271
158717, 241
159524, 1000, 1017, 1038, 1046, 1051
160244, 1075
160396, 491
161523, 241
161780, 457
162239, 1010
162866, 497
163316, 996, 1038, 1046, 1048, 1051
163661, 1075
163668, 107
163818, 765
164294, 186
165241, 339
166181, 251
166826, 1008
168497, 255, 256
168852, 93
169364, 1018
169567, 503
170051, 518, 519
170196, 607
171146, 989
171428, 627
171639, 484
171694, 625
172118, 877
172549, 54
172851, 883
172941, 251
172966, 254, 255
173020, 255
173628, 513
173643, 1069
173796, 254
173990, 759
174259, 254, 255
174508, 497
174576, 93
174914, 254
175034, 877
175097, 248
175379, 995, 1015
175662, 242
175780, 202
176474, 252
176369, 137
176370, 137
177174, 198
177290, 243
177291, 243, 244
177778, 253
177957, 526
178133, 255, 597
178688, 877
179738, 243
179772, 513
179833, 518
179947, 995, 996, 1011
180126, 250, 255
180208, 252
180216, 250
180587, 137
180666, 1039
180667, 994
180680, 308
181151, 995
181590, 620
182044, 242
182216, 137
182300, 243
182943, 245
183317, 519
183557, 497, 508
184145, 994, 1038
184185, 994
184201, 994, 1038
184230, 186
184635, 247
185139, 497, 509
185240, 519
185402, 241
185808, 251
185837, 1000, 1017, 1039
189262, 759
189836, 1005
189837, 1005
189840, 239
193135, 1024
193301, 241
196152, 239
196699, 492
196730, 994, 1039
197163, 241
197346, 241
197805, 241
197965, 1025
198284, 78
198482, 1039
199885, 82, 536
200292, 102
201233, 994
201261, 758
201306, 946
201907, 989
201910, 994
202133, 762, 763
202234, 274
203178, 994, 1006, 1050
203377, 117
203642, 994, 1039
203791, 245
203792, 244
203820, 518, 519
204868, 861
204883, 172
204921, 241
205034, 206
205263, 247
205264, 247
205295, 240
205762, 120
205849, 247
205850, 240
205865, 621
206386, 241
206471, 625, 628
206619, 240
206883,509, 515, 516
206950, 972, 994, 1006
207155, 246
207156, 243
207554, 492
207702, 244
207869, 749
207888, 240
208487, 247
209161, 1069
209993, 878
210519, 1011
210778, 995, 1027
211520, 318, 1028
211573, 1028
211729, 243
211866, 951
211871, 521
211956, 546
212893, 248
212901, 241
213154, 248
214194, 758
214398, 626
214962, 244, 254
215672, 312
216307, 307
216629, 520

216669, 500
217128, 491
217237, 1111
217316, 20
217555, 243
217852, 419
218490, 497
218989, 243
219085, 470
219162, 1005
219163, 1005
219570, 759
219848, 549, 1025
220228, 253
220322, 346
220493, 759, 763
220711, 499
221041, 499
221080, 1009
222248, 698
222319, 762
222450, 1007
222453, 758
222624, 521
222777, 491
222873, 521
222893, 499
223294, 521
224330, 993
225134, 1084
227198, 1032
294163, 246

AUSTRO-HUNGARIAN

4918, 1103
A-6502, 1016
8171, 994
9475, 471
9557, 253
10344, 247
13088, 247
13838, 253
16112, 1087
17456, 993
17684, 302
19037, 1075
19041, 1075
21182, 1058
21213, 1017
21614, 172
23151, 627
23240, 241
28949, 243
28950, 243
23242, 241
25335, 255
27060, 255
30092, 248
30845, 241
31310, 460
31391, 1000
31674, 243
32636, 1018
32637, 1017
33453, 243
33508, 996
33720, 248
34272, 996
35666, 172
54062, 471
Aug. 28, 1893, 1055
Feb. 9, 1895, 1055
July 15, 1895, 1055
Mar. 26, 1897, 1066
Jan. 1, 1899, 1004, 1080
Feb. 4, 1899, 1004

BELGIAN

56230, 146
55383, 520
68890, 460
74802, 746
78913, 302
84774, 479
94383, 743
103093, 1055
113156, 1001
137577, 1004
138462, 1004
138507, 1072
146685, 1110
157100, 1072
162701, 1058
164907, 1069
164908, 1069
164909, 1062
169443, 1087
171980, 1058
173572, 1075
174194, 1072
180585, 1085
184078, 1085
186556, 1063
210965, 759

SPANISH

7849, 460
9204, 479
31479, 1087
32857, 1069
33511, 1075

SWISS

449, 527
1958, 460
2123, 460
3740, 471
4412, 460
4984, 473
12728, 517
13695, 536
16077, 501
18042, 517
19135, 1087
22680, 486
30322, 1084
30768, 1075
40994, 758

CANADIAN

62188, 987, 1001,
62831, 1087
63101, 987, 1001
66000, 1080
76638, 1068
83099, 1089
85922, 1068

DANISH

2558, 987, 1001
2636, 987, 1001
3258, 1103
Jan. 12, 1897, 1055

HUNGARIAN

Jan. 9, 1896, 1055
Sep. 22, 1899, 1103
Nov. 12, 1903, 1069
Mar. 22, 1904, 1075, 1084
Aug. 31, 1898, 1004

ITALIAN

265, 460
356, 479
17844, 460
22846, 460
27943, 471
31932, 460
33347, 1055

JAPANESE

16247, 760
18600, 760

LUXEMBOURG

3302, 1004
3361, 1004
5235, 1087
5236, 1087
5329, 1069
7610, 987

MEXICAN

8179, 760

NORWEGIAN

7610, 1001
8958, 1103

PORTUGUESE

2325, 1055
2899, 987, 1001
2930, 987, 1001
4475, 1066

RUSSIAN

3264, 1001
3378, 1001
2606, 1055
5675, 247
7848, 254
8855, 254
8893, 254
11492, 994
12649, 596
Apr. 24, 1896, 1055
Aug. 14, 1898, 987, 1001
Oct. 14, 1898, 987, 1001
Mar. 19, 1901, 1070

SWEDISH

Apr. 30, 1866
11657, 1103
19295, 1069

NAME INDEX

Abate, 362.
Abderhalden, 197.
Abderhalden and G. Brossa, 197.
Abderhalden and H. Dean, 197.
Abderhalden, E., and J. Schuler, 197.
Abel, 773, 783, 788, 829, 898.
Abel, F., 22, 24, 73, 123, 945, 968.
Abel, F., and J. Dewar, 928.
Abelli, M., 935.
Able, C., 1025.
Abney, 871, 884.
Aby, F., 798.
Actiengesellschaft Dynamit Nobel, 54.
Act. Ges. für Maschinenpapierfabrikation, 470.
Acworth, J., 785, 844, 858.
Adams, W., 433, 779, 785, 870.
Adams & Elting, 262.
Adams, W., and H. McKay, 432, 779.
Adamson, *see* Still.
Aenthoni, C., 782.
Akt. Ges. für Anilin Fab., *see* Berlin Aniline Co.
Akt. Ges. Metzeler & Co., 792.
Akyroyd, H., and P. Krais, 1110.
Alary and Choisy, 325.
Albany Billiard Ball Co., 577.
Albany Dental Plate Co., 578, 720.
Albert, E., 834, 877.
Albertin, 799.
Alexander, G., 801.
Alexandroff, *see* Rüdakoff.
Alexejew, 188.
Allaire, *see* Desvaux.
Allen, A., 200.
Allendorf, *see* Rudeloff.
Alliott, J., 91, 789.
Allison, C., 786.
Alsberg, C., 193.
Althausse, M., 996.
Amend, O., 150, 300, 776.
American E. C. & Schultze Works, 956.
American Viscose Co., 1080.
American Zylonite Co., 107, 150, 572, 580.
Ames, A., 902.
Ampere Electrochemical Co., 247, 788.
Amstutz, N., 877, 887.
Ammundsen, J., and E. Rasmussen, 407, 788.
Andemars, 457.
Anders and Elliott, 745, 785.
Anderson, E., 928.
Anderson, W., 931.
Andés, L., 63, 170, 574, 747.
Andre, *see* Curtis.
Angamarre, L., 782, 828.
Annison, F., 369, 379, 750, 777, 778.
Anthés, M., 781, 791, 880.
Anthés, M., and E. Lloyd, Ltd., 885.
Anthony, 74, 119.
Anthony, F. A., 779, 856.
Anthony, H. T., 773.
Anthony, R. A., 779, 856.
Apathy, 797, 798, 799, 801, 806, 808.
Appletree, I., 785.
Aran, 823.
Aran, H., 784.
Arbezearme, L., 253.
Archer, C., 789.
Archer, Fannie, 782, 828.
Archer, Fred, 782, 828.
Archer, S., 144.
Argutensky, P., 803, 807.
Arledter, F., 1103.
Arlington Co. 580.
Arlington Mfg. Co., 580.
Armitage, H., 349, 786.
Armstrong, 273.
Armstrong and Tilden, 240.
Arnaudon, J. J., 17.
Arnold, A., 361.
Arnold, G., A. Fox., A. Scott, and H. Roberts, 485, 790.
Arnold, Scott and Roberts, 56.
Arnost, A., 768.
Aron, H., 626.
Arrault, *see* Schmerber.
Asboth, 181.
Asbrand, P., 1066.
Aschan, 238.
Aschen, O., 238.
Aschkinass, 44.
Ashwell, J., 1110.
Askham, *see* Smith.
Aspinwall, 976.
Assadas, 253, 626, 757, 791.
Asselot, M., 625.
Atha, B., 301.
Atkins, 81.
Aub, P., 702.
Aubertin, G., 802.
Auchu, H., 908, 947.
Audemars, G., 782.
Auerbach, G., 251.
Aufrecht, 823.
Austen, P., 751.
Austen, P., and F. Maywald, 268.
Austen, Maywald and Govers, 269.
Austerweil, G., 243, 781, 791.
Axtell, *see* Stevens.
Aylsworth, J., 734, 781, 1021.

Babcock, Leonard, and Crane, 326, 773.
Bachrach, D., 307, 491, 629, 779, 788, 789.
Bacon, *see* Hart.
Badische Aniline Co., 240, 241, 246, 252, 255, 732, 790, 791, 993, 994, 1038, 1039.
Baechland, P., 152.
Bagraehow, C., 352.
Bailey, *see* Laurie.
Bakeland, L., 759.
Bakhover, 187.
Balagny, 785, 840, 844.
Balard, 174.
Balbiano, 187, 188.
Baldwin, A., 361.
Bâle, 527.
Ball, G., 262.
Ball, S., 201, 203.
Balston and Briggs, 993
Bamber, J., 791, 880.
Bamberger and Einhorn, 181.
Bancroft, 13, 188, 227, 232.
Brancroft, W., 830.
Braneroft, W., and G., 397.
Banhegyi, *see* Heydenhauss.
Bantoek, J. W., 783.
Baranetsky, 812.
Barboni, 169.
Bardy, 1056, 1080.
Barlow, E., 325.
Barnodai, 764.
Barnwell, 24, 298, 413.
Barnwell and Rollason 297, 424, 571, 699, 782.
Barratt, A., Esher and A. Hull, 786, 843.
Bartlett, *see* Shepard.
Barton, J., 699.
Basle Chem. Works, 241, 243, 244.
Basler, J. & Co., 241, 251, 780, 789.
Basselli, A., 238.
Basselli, *see* Bisehler.
Bassett, *see* Palk.
Bate, *see* Harrison.
Battonier, E., and P. Miehel, 784.
Bauehé, M., 312.
Baudin, 23.
Bauer, M., 789, 843.
Bauer and Klein, 188.
Baumann, 1058.
Bauman and Dresser, 1004.
Baumgartner, A., 787, 882.
Bayer, A., 758.
Bayer & Co., 72, 207, 758, 759, 789, 791, 792, 859, 876, 878, 992, 998, 1000, 1005, 1010, 1014, 1016, 1017, 1021, 1022, 1023, 1029, 1031, 1033, 1034, 1035, 1038, 1040, 1041, 1042, 1045, 1046, 1047, 1049, 1051.
Beadle, C., 46, 1056, 1059, 1099, 1101.
Beadle, C., and Stevens, H. P., 76.
Beals, L. S., 774.
Beatson, 816.
Beau, H., 626.
de Beauregard, T., 782, 828.
Bebie, *see* Lunge.
Béchamp, 50, 489, 829.
Beehmann, 181, 211.
Beck, 753.
Beck, C., 261, 266.
Becker, *see* Eiehengrün.
Bechhold, 814.
Beckmann and Brüggemann, 178.
Beekmann and Saron, 239.
Bedal, A., 147.
Behal, A., 232, 250, 780, 790.
Behal, A., P. Magnier & C. Tisser, 240, 246, 251, 788.
Beilstein and F. Seelheim, 758.
Beitlich, 747.
Bell, *see* Hake.
Bell, G., 911, 966.
Bellarminow, 810.
Bellet, 458.
Beloe, 829.
Belohoubek, 187.
Beltzer, F., 20, 458, 525, 544, 1016, 1056, 1081.
Bemberg, J., 497, 1005, 1006.
Bemont, 178, 179.
Bendix, *see* Eisenmann.
Benecke and Fischer, and J. Frank, 784.
Benedictus, M., 261.
Bengs, *see* Faustein.
Benjamin, G., 623, 624, 779.
Bennett, H., 425.
Bennett, S., 415, 787.
Bensinger, A., 745, 776.
Bensinger, F., 573.
Bente, 4.
Bentley, 326.
Bentley, G., 208.
Bentley, H. A., 779.
Benzinger, *see* Tiller.
Bérard, P., 24, 299, 363, 413, 571, 699, 782.
Berenguer, E., 498.
Bergier, L., 489.
Bergmann and Junk, 52, 923, 977.
Bergroth, *see* Komppa.
Bergs, E., 240, 246, 780.
Beringer, G., 795, 820.
Berl, E., 20, 500, 536.
Berl and Bütler, 55.
Berl and Fodor, 34.
Berl and Klaye, 33, 36, 62, 81.
Berl and Smith, 36, 81, 117, 1003, 1004, 1006, 1007.
Berlin Aniline Co., 240, 241, 250, 298, 669, 789, 840, 997, 1024, 1025.
Bernadou, J., 941.
Bernadou and F. Brown, 902.
Bernard, R., 551.
Bernstein, H., 59, 509, 510, 519.
Bernstein, R., 784.
Bernthsen, 1059.
Bers, E., 780.
Bersin, 723.
Berstein, 792.
Berthelot, 1, 57, 178, 184, 240.
Berthelot and Riban, 240.
Berthon, R., 882.
Bertram and Walbaum, 239.
Berz, 753.
Berzelius, 340.
de Besancle, *see* Tribouillet.
Bessemer, 315.
Best, T., 623, 687, 784.
Béthisy, L., 318, 491, 628, 778, 779, 780, 788.
Béthisyes, Rose, 629.
Béthisy, L., and Soe. M. Rose & Co., 765.
Bevan, *see* Cross.
Bichel, C., 941, 947.
Biekford, Spooner & Pyroxylin Mfg. Co., 59.
Bienert, 822.
Biermann, J., 408, 787.
Bierry and Giaja, 812.
Bigelow, 810.
Bigelow, L., 211.
Bigelow, S., 813, 815.
Bigelow and Gemberling, 45, 810, 813.

Bigelow and Maynard, 816.
Bigelow, *see* Maynard.
Billeter, O., 241, 780.
Billing, F., and A. Letalle, 364, 787.
Bindsehedler, E., 488.
Bingham, 828.
Binz, A., 1066.
Biot, 175.
Bisehler, A., and A. Basselli, 241, 780.
Bishot, W. B., 783.
Bittner and Villedieu, 416, 787.
Blair, 786, 858.
Blake, D., 569, 773, 783.
Blakeley, *see* Oldroyd.
Blakeman, W., 447.
Blane, 471, 480.
Blanc, *see* Blauvelt.
Blane, G., 238.
Blanepin, 629.
Blandy, A., 364, 785.
Blauvelt, L., and A. Blane, 186.
Bley, 22.
Bloehman, 808.
Bloek, G., 362.
Blomen, *see* Krug.
Blondeau, 489.
Bloor, W., 1007.
Bloxam, A., 255, 497.
Bluemel, 655, 785.
Blum, 416, 801.
Blume, *see* Buseh.
Blumer, L., 759.
Bodeeker, C., 809.
Bodlander, *see* Traube.
Boehringer, C., & Son, 243, 244, 254.
Boeseh, E., 1001, 1003, 1058.
Bogert, M., 420, 775.
Bogomoletz, 187.
du Boistesselin, H., and C. Gay, 519.
du Boistesselin, H., and J. Verny, 247.
Bokorny, 45, 51.
Bolas, *see* Self-Developing Plate Co.
Bolas, T., 781, 842.
Bolton, *see* Sayee.
Bolton, 303.
Bolton, W., 870.
Bonavita, *see* Thomas.
Bonavita, J., 1098.
Bondet, L., 765.
Bonge, *see* Rassow.
Bonjeon, 22.
Bonnaud, 788.
Bonnaud, J., 352, 415, 417, 779, 789.
Bonneville, 59.
Bonneville, J., 784, 829.
Borelli, G., 815.
Borgmeyer, C., 153, 777.
Borgmeyer, L., and L. Paget, 153, 777.
Boriseh, P., 238.
Borissow, 53.
Borland, *see* Johnston.
Borland, *see* Judson.
Borland, 961.
Born, *see* Halle.
Börner and Huss, 169.
Borrmann, R., 801.
van Boseh, F., and A., and O. Müller, 499.
Boston Artifieial Leather Co., 369.
Böttger, 22, 819.
Bottler, 339.
Bouehardat, 183.
Bouehardat and Lafont, 247.
Bouehaud-Praeeiq, J., 951, 969.
Bouehé, M., 785.
Bouequey, C., 498.
Bouillier, J., 356, 533, 789.
Bouillot, C., 534.
Boulanger, 900, 962.
Boule, L., A. Blin, A. P. and C. L. Testu, 783.
Boult, A., 243, 362, 791.
Bourdeaux, J., 842.
Bouret and Verbiese, 61, 788.
Bousfield, G., 362.
Bousfield, J., 130, 788.
Bourveyert, E., 360.
Bowen, *see* Riehardson.
Bowman, 24.
Boyd, *see* Lamb.
Braeher, L., W. Collyer and J. Cassells, 429, 787.
Braeeonnet, 571.
Braeonnat, 21, 54.
Bradbury, R., 193.
Bradford Dyers Assoeiation, 370.
Bradford, R., and G. Rawlins, 320, 787.
Brady, C., 776.
Brandenberger, E., 505, 791, 1093, 1095, 1096.
Brandenberger, J., 421, 505, 781, 791, 1103.
Braseh, W., 194.
Breehner, A., 806.
Bredt and v. Rosenberg, 238, 239.
Bremen Troekenplatten Fabrik B. Klatte, 843.
Brentini, 261.
Bretau, P., and Leroux, H., 253.
Bretin, M., 815.
Breuer, E., 487.
Brewster, R., 784.
de Brialles, G., 117, 407, 629, 790, 791, 861.
Briem, H., 176, 207.
Brigalent, 363.
Briggs, *see* Balston.
Briggs, *see* Cross.
Briggs, 50.
Briggs, J., 1058.
British Glanzstoff, Ltd., 497, 563.
British Xylonite Co., *see* Goldsmith.
British Xylonite Co., 572, 707, 785.
Brockaway, J., 699.
Broekhaus, 201.
Brodbeek, C., 485, 785.
Brohn, J., 754.
Bronnert, 18, 32, 154, 497, 500, 502, 553, 598.
Bronnert and Fremery, 497.
Bronnert, Fremery and Urban, 502.
Bronnert, E., and T. Sehlumberger, 130, 485, 787, 788.
Brooks, H., 764.
Brooman, R., 783, 829.
Brossa, *see* Abderhalden.
Broughton, 172.
Brown, *see* Bernadou.
Brown, A. & F. Co., 80.
Brown, L., 572.
Brown, M., 715, 779.
Brown, I., and A. Sanborn, 730, 773.
Brühl, 183, 184, 240.
Brüley, 28.
Bruneau, 962.
Brüning, *see* Meister.
Brunner, J., and C. Klary, 785.
Bruno, 521.
Brunswig, 19.
Bruylants, 149.
Bry, M., 843, 790.
Brydges, E., 784.
Büehner, E., and J. Mesinheimer, 192.
Buek, C. V., 781.
Bueklin, 339.
Buekstab, B., 307.
Buekquet, O., 492.
Bumeke, G., and R. Wolffenstein, 990.
Bume, F., 1011.
Bumpus, 804, 806.

Bunn, L., 699, 782.
Bunti, 228.
Buntroek, *see* Witt.
Buntrock, A., 1069.
de Buren, C., 725, 779.
Burford, S., 181.
Burnham, S., 692.
Burr, W., 360.
Burrill, P., 323.
Burroughs, C., *see* Hyatt.
Burrows, W., 361.
Burton, 273.
Buscalioni, L., and Pollaeci, 796.
Buseh, 753, 763.
Busch and Blume, 768.
Busse, 797, 798, 801.
Bush, E., 419, 787, 788.
Bussy, Phillipe, and Bussy, 415, 787.
Bütler, R., *see* Berl.
Butlerow, 183.
Butterworth, H., & Sons Co., 371.
Büttner, G., and J. Neuman, 6, 992.

Cadoret, E., 362, 414, 484, 485, 491, 786, 787.
Cadoret & Delgrade, 484, 629.
Cadoret, *see* Vogel.
Cahours, 149, 172, 174.
Cain, J., 459.
Cairns, *see* Weber.
Caldwell, 819, 823.
Caldwell, W., 781, 832, 841.
California Powder Co., 939.
Callenberg, E., 250.
Cambrelin, 815.
Campbell, A., 1031.
Canard, F., 408, 783.
Canfield, W., 799.
Cantu, F., G. Miglioretti, and G. Maffei, 763.
Capp, F., 734, 779.
Cardaret, *see* Cadoret.
Carneiro, 60, 61, 121.
Carnoy and Lebrun, 802.
de Carolles, 49.
Carpenter, W., 420, 633, 728, 735, 737, 774, 775, 776.
Carré, L., 968.
Carter, *see* New Explosives Co.
Cartwright, M., 571, 782.
Cary, E., 701, 774.
Case, 363.
Casein Co., 763, 789.
Caspari, 816.
Cassella, L. & Co., 732.
Cassella, L., *see* Vignon.
Cassells, *see* Bracher.
Casson, T., 626.
Casthelaz, J., and C. Depoully, 336.
Castle, 417.
Cathelineau, H. and A. Fleury, 519, 763.
Cave-Browne, H., 619, 789.
Cazeneuve, P., 484, 489.
Cellonite Co., 580.
Celluloid Co., 572, 573, 577, 579, 580, 749, 846.
Celluloid Mfg. Co., 573, 579, 784.
Celluloid Varnish Co., 300, 301.
Celluloid Zapon Co., 301.
Cellulose Products Co., 1068.
Chadeloid Co., 263.
Champion, *see* Diamanti.
Chanard, A., 762, 792, 1009.
Chaneel, 176, 178, 182, 183.
Chandelon, T., 531.
Chaplet, A., 459.
Chapman, 187, 580.
Chapman and Smith, 183.
Chappius, E., 787.
Chardonnet, 44, 45, 62, 74, 78, 90, 551.
de Chardonnet, A., 495.
de Chardonnet, H., 457, 460, 471, 489, 491, 492, 776, 777, 778, 784, 785, 786.
Chartrey, *see* Lonele.
Chattaway, F., 171.
Chaubet, J., 255, 498, 788, 862.
Chavassieu, H., 517, 1084.
Cheetham, J., 782, 828.
Cheetham, J., and T. Southworth, 782.
Chem. Fab. Aktien, 244.
Chem. Fabrik. Greisheim Elektron, 252, 259, 791.
Chem. Fab. v. Heyden, 243, 246, 247, 248, 790, 791.
Chem. Fab. Lienau & Co., 242.
Chem. Fab. Sandoz, 241, 243, 790.
Chem. Fab. Weiler Ter Meer, 249, 250, 252.
Chemical Factory "Flora," 1039.
Chertier, *see* Nicolardot, 1111.
Chevreau, M., 821.
Chickering, C., 684, 776.
Childs, E., 763.
Childs, J., 299, 782.
Chilworth Gunpowder Co., 963.
Choisy, *see* Alary.
Chorley, J., 779, 788, 1093.
Christison, 237.
Chrolithion Collar & Cuff Co., 749.
Church, 228.
Chureh, C., 675, 779.
Chute, H., 157, 780.
Cie. Gén. de Chromolithie, 414.
Claessen, C., 102, 120, 150, 251, 254, 411, 597, 780, 781, 790, 792, 907, 946, 951, 1007.
Clamond, 357.
Clandon and Moran, 177.
Clark, 414.
Clark, A., 530, 784.
Clark, A. and W., 789.
Clark, G. F. & R. I., 785.
Clark, W., 362, 829.
Claubry, G., 176.
Claude, G., 495.
Claudet, 829.
Claus, C., 629, 784.
Clayton, *see* Tetley.
Clayton Aniline Co., 242.
Clayton, J., 781.
Clement, *see* Nicolardot.
Clement, E., 626.
Clement, V., 544, 547.
Clement, L., and C. Rivière, 172.
Clive, J., 782, 828.
Close, G., 780.
Coale, H. 407.
Coehius, F., 526.
Coeking, *see* Kynoeh.
Cocking, A., 102, 790, 901, 935.
Cocking, A., & Kynoeh, Ltd., 907, 942, 943.
de Coëtlogon, 777, 786.
Coffetti and Maderna, 70.
Coffignier, C., 315.
Cohn, A., 394, 430, 458, 789.
Colbrook, *see* Ling.
Cole, C., 360.
Coles, 276.
Colin, A., 237, 562.
Collard, A., 496.
Collardon, L., 498, 1084, 1099.
Collender, *see* Phelan.
Collins, K., 673, 776.

Collyer, *see* Braeher.
Commereial Products Co., 1012.
Compagnie de la Soie de Beaulieu, 565.
Compagnie Franco-Amerieaine, 573.
Comp. Franc. des Applieations de la Cellulose, 1023.
Comp. Franc du Celluloid, 763, 785.
Comp. Gén. de Phonographes, Cinematographes et Appareils de Préeision, 791, 862, 865, 880.
Compton, E., 262.
Conradson, P., 273.
Consortium Müllhousien, pour la Fabrication de Fils Brilliants, 500.
Continental Viseose Co., 1069.
Cooppal & Co., 964.
Coplin and Crowe, 372.
Coppetti, 560.
Cordonnier-Wibaux, A., 533.
Cornides, L., 363, 699, 782.
Corti, A., 262, 266, 997.
Cossit, F., 780.
Costa, J., 188, 273.
Cossitt, F., 859.
Cotton Powder Co., 949, 961.
Cottrell, F., 682, 774, 784.
Coulier, 488.
Courtauld & Co., 563.
Courtould & Co., and Napper, 792.
Courtauld and Wilson, 1064.
Courtenay, R., 783.
de la Coux, H., 458.
Covert, J., 562.
Craandijk, 212.
Cramer, 72, 503.
Crane, *see* Babeoek.
Crane Chemical Co., 301.
Crane, F., 152, 301, 303, 318, 367, 785, 842.
Crane, F., & W. Field, 785.
Crane and Hale, 302, 785.
Crane, J., 580.
Crane, J. E. and C. Joyee, 37, 117.
Crane, L., 699.
Crane, T., *see* Hyatt, J.
Craske, *see* Saunders.
Crendiroupoulis and Ruffer, 810.
Crépelle-Fontaine, C., 102 494, 780, 781.
Crespin, L., 480, 780, 790.
Crestina, D., 803.
Crombie, W., 528.
Crombie, W., and F. Sehubert, 528.
Crompton, *see* Winkler.
Crookes, 457, 520.
Cross, *see* Luek.
Cross, *see* Viscose Syndieate.
Cross, *see* Weber.
Cross, 7, 1001, 1055.
Cross, C., 1008, 1058, 1066.
Cross and Bevan, 1, 2, 3, 6, 7, 8, 10, 27, 42, 46, 50, 58, 357, 540, 542, 554, 985, 986, 989, 991, 993, 1000, 1001, 1003, 1025, 1028, 1036, 1037, 1044, 1077, 1112.
Cross and Briggs, 1026, 1111.
Cross, Bevan and Beadle, 76, 786, 1055, 1056, 1057, 1059, 1060, 1066, 1068.
Cross, Bevan and Briggs, 991, 1111.
Cross, Bevan and Jenks, 50, 58, 60, 1007.
Cross, Bevan, and J. Traquair, 1008.
Cross, C. and D. Spruance, 1070.
Cross, and J. Traquair, 1008.
Cross and Weber, 1001.
Cross, Weber and Frankenburg, 987.
Crowe, *see* Coplin.
Cross and Stern, 753.
Crowther, H., 262.
Crozat, L., 783, 829.
Crum, 24.
Crum, W., 1057.
Crumière, E., 514.
Cullen, W., 981.
Culp, S., 549.
Cummings, J., 790.
Cunliffe, W., 299, 783.
Cuntz, L., 498, 532.
Currier, C., Sons, 121, 127, 380, 383.
Currier, F., 380.
Curtis, and Andre, 959.
Curtis & Harvey, *see* Hargreaves.
Curtis & Harvey, 959, 960.
Curtis & Marble, 374, 375, 376, 377, 378.
Cutters, W., 308, 786.
Cutting, J., 574, 699, 782, 816.
Cyanid. Ges. m. b. H., 789.

Dahl, *see* Beadle.
Dahlgren, V., 806.
Daily, 311.
Damond, *see* Freundler.
Dange, W., 5.
Daniels, W., 863.
Dantsehakoff, W., 806.
Danzer, H., 792, 862.
Danziger, J., 171, 207.
Darkesehwitseh, 807.
Darmois, E., 237, 238.
Darrah, W., 237.
Dautriehe, 949.
Davey, G., 683, 783.
Davies, J., 361.
Davis, M., 663, 775.
Davis & Furber 79.
Dawbarn, 723.
Dawson-Smith, C., 943.
Daxe, M., 264.
Day, A., 363.
Day, D., and J., 782, 828.
Day, J., 278, 280, 281, 282, 283, 284, 295.
De Grousilliers, 387.
De Jonge, 208.
De Laval, 291.
De Loas, 574.
De Montlord, G., 434.
De Mosenthal, 989.
De Vrij, 27.
Dean, 59.
Dean, *see* Abderhalden.
Defaueamberge, P., 1098.
Defraiteur, 946.
Degener, *see* Junker.
Degraide, *see* Cadoret, *see* Delgraide.
Deiss, E., 429, 789.
Delgrade, *see* Cadoret, *see* Degraide.
Delubae, A., 1085.
Demarçay, 149.
Denis, M., 482, 493.
Denis, *see* Soe. Desmaris.
Denis, M, 780.
Denne, 799.
Depeissis, 496, 501.
Depont and Story, 682.
Depoully, *see* Casthelaz.
Depoully, C., 1057.
Dervain, 492.
Desehange, C., 815.
Desgeorge, 763.
Desmarais, L., G. Morane, and M. Henis, 846, 790.
Desvaux, L., and H. Allaire, 749.

Deutsche Sprengstoff-Ges., 947.
Deutsche Zelluloidfabrik, 249, 789.
Devine, J., Co., 130.
Dewar, *see* Abel.
Dey, H., 698.
Dhommee, 574.
Diamanti, 489, 493, 790, 791.
Diamanti, H., H. Champin, and P. Loisef, 118, 489.
Diamanti, H., P. Loisef, and H. Champin, 96.
Diamond Paper Mills, 104.
Dickson, J., 265.
Diekson, *see* Paterson.
Didier, T., 687.
Dierichs, E., 546.
Dieterich, K., 335.
Dietl, G., 535.
Dietz, L., 699, 773.
Dietz, L., and B. Wayne, 59, 578.
Dilette, G., and J. Talabott, 171.
Dilette, *see* Schwab.
Dilette, *see also* Hébert-Dillette.
Dimmer, F., 806.
Diss, A., 661, 775.
Dittmar, C., 75.
Ditzler, *see* Follet.
Dixon, H., 782, 829.
Dixon, J., 721, 778.
Dobbs, C., 781.
Dobler Bros., 573.
Doerflinger, *see* Magnier.
Doerflinger, W., 1028.
Doht, W., 1031.
Dolliak, 59.
Domonte and Menard, 23.
Donisthorpe, E., 791, 833.
Doroschewski and Rakowski, 57.
Dosselman, G., & P. Neymann, 263.
Douge, S., 493, 790.
Douge, J., 534.
Dow, C., 488.
Dreaper, W., 511, 513, 542, 556.
Dreger, W., 977.
Drehschmidt, 28.
Dréna, 574.
Dresser, *see* Bauman.
Dreyfus, H., 994.
Dreyfus, H., and L. Schneeberger, 994.
Drinkwater, J., 424, 783.
Drobegg, G., 235.
Drouinat, 459.
Druge, *see* Hörk.
Drummond, I., 690, 774.
Dubois, A., 524.
Dubois, C., 328.
Dubosc, A., 231, 248, 491, 1006.
Du Bosc, O., 239, 241, 246, 790, 791.
Du Bosc, A., and C. Piquet, 242.
Dubowitz, H., 769.
Duclaux, 186.
Ducruet, J., 171.
Dudley, W., 210, 277.
Dugour, 844.
Dulitz, A., 489.
Dumas, *see* Stas.
Dumas, 22, 174.
Dumas and Peligot, 228.
Dumas and Stas, 174.
Dunham, H., 763, 802.
Dunlop, J., 671.
Dunn, Lt. Col., B. W., 770, 941, 1142.
Du Pont, F. G., 118, 130.
Du Pont, F. I., 128, 135.
Du Pont, F. I., and F. Sparre, 54.
Duppa, see Frankland.
Dupré, P., 983.
Duquesnoy, J., 486.
Durnford, A., 786.
Duttenhofer, C., 901.
Duval, 794, 796, 799.
Duvinage, 1106.
Du Vivier, 365, 479, 491, 785.
Dye, C., 517.
Dyer, F., 883.
Dynamite Mfg. Co., 784.

Earle, *see* Reid.
Eastern Dynamite Co., 55.
Eastman, G., 785, 786, 839.
Eastman Kodak Co., 840, 992.
Eastwood, *see* Hunt.
Eastwood, *see* Reid.
Eberle, E., 821.
Eberson, 262, 266.
Eek, E., and E. Bechtel, 498.
Eckstein, F., 378, 670, 777.
Eder, 25, 26, 485, 829, 877.
Eder and Valenta, 833.
Edson, *see* Kipper.
Edson, J., 130, 370, 378, 420, 430, 572, 600, 612, 633, 635, 670, 672, 675, 677, 683, 702, 745, 774, 775, 776, 784.
Edwards, 816.
Edwards, B., 785, 789, 859, 866.
Effront, J., 196, 231.
Egerton, *see* Winterbottom.
Ehrlich, F., 192, 196, 198.
Ehrlich, P., 196.
Eibner, A., and O. Hue, 273.
Eichengrün, A., 985, 1016, 1021, 1023.
Eichengrün and Becker, 988, 1016, 1017, 1018.
Eichengrün and J. Precht, 1016.
Eilbertson, L., 721, 780, 788.
Einhorn, *see* Bamberger.
Eisemann, *see* Zühl.
Eisenmann, R., 790.
Eisenmann, and J. Bendix.
Eitner, 444.
Eley Bros., Ltd., 937.
Eliot, 261.
Elkington, Mason & Co., 568.
Elliott, 59.
Elliott, *see* Anders.
Ellis, *see* McElroy.
Ellis, C., 262, 264, 265, 266, 424, 779, 781.
Ellis, G., 243, 790.
Ellis, R., 41, 790.
Elsässer, 229, 230, 231, 781.
Elsehing, 797, 798.
Elting, *see* Adams.
Emerson, *see* Martin.
Emmerling, 184, 190, 191.
Engel, 61.
Engel, F, 785.
English, 228.
Ensign, C., 699.
Ensminger, H., 408, 764 789.
Epstein, J., 428, 784.
Erdmann, 4, 503.
Erlenmeyr, 184.
Ernst, *see* Levy.
Ernst, C., 1062, 1066, 1078, 1090.
Ernst, C. and G. Hamlin, 1073.
Errara, L, 788.
Escales, 969.
Eschalier, X., 538.
Esher, *see* Barratt, 843.
Etablissement Gaumont, 860.

Everding, *see* Hyatt.
Everding, J., 672.
Evers, R., 137.
Explosives, Co., 959.
Eyclesheimer, 799, 803.
Eyer, P., 819.

Faber, O., and B. Tollens, 990.
Fab. de Prod. Chim. "Flora", 998.
Fabr. de Soie Artif. de Tubize, 492, 532.
Fab. v. Heyden, 1021.
Faget, 176, 177.
Fahrig, 415, 785.
Fairbanks Co., 135.
Falkenstein, G., and C., 364, 788.
von Falkenstein, J., 964.
Fargier, A., and N. Charavet, 782.
Farledter, 1099.
Farmer, *see* Silberrad, 50, 53.
Farrel, 390.
Farrell, F., 1009.
Faure, *see* Trench.
Faust, 1072.
Faustein & Bengs, 212.
Favré, L., 842.
Fayolle, E., 759.
Fehling, 177.
Feige, *see* Verley.
Fendler, C., L. Franx, and W. Stüber, 272.
Fenton, H., 2, 986.
Ferenczi, 750, 1072.
Ferenczi, S., 1056.
Ferner, 304.
Féval, L., 440, 780.
Few, C., 787.
Fiber Producto Company, 361.
Fick, A., 812.
Field, J., 676, 791.
Field, W., 145, 206, 301, 302, 303, 336, 367, 370, 430, 431, 776, 777, 785, 786.
Field and Martin, 799, 806, 808.
Field, J., and H. Ujhely, 202.
Fielding, 1108.
Fielding, A., 1069, 1103, 1109.
Findlay, J., 789, 842.
Finzi, 50.
First Austrian Soda Works, 1062.
Firth, J., 261.
Fischer, *see* Huck.
Fischer, A., 177.
Fischer, E., 193, 989.
Fischer, J., 207, 782.
Fish, 797, 803.
Fisher, G., 747.
Fittig, 182.
Fittig and Kolke, 149.
Fitz, 182, 185, 190.
Flatters, A., 14.
Flawitzsky, 213.
Fleischmann, 799.
Flemming, 172, 340, 425.
Flemming, H., 753.
Flemming, R., 1029.
Fleury, *see* Cathelineau.
Flint, 822.
Florman, A., 798, 801.
Fodor, A. *see* Berl.
Foerster, *see* Wolff.
Follet, P., and G. Ditzler, 521.
Foltzer, J., 498.
Foltzer, T., 460.
Ford, W., 814.
Foret, 519.
Forster, *see* Wolff.
Forster, 769.
Forster, A., 422, 789.
Forster, F., 768.
Forster, F., and G. Rockwood, 873.
Forster, T., 299.
Fortun and Semprun, 42.
Foster, T., 783.
Fox, *see* Arnold.
Fox and Myers, 792.
Foxlee, E., 785, 844, 870.
France, J., 61, 74, 79, 106, 580, 602, 657, 658, 692, 696, 703, 704, 707, 718, 743, 745, 776, 777, 778, 785, 862.
Franchimont, 1, 986, 1037, 1038.
Francis, 21.
Francis, J., 824.
Francis, *see* Grubbs.
Frank, M., 844.
Frankenburg, *see* Cross.
Frankenburg, I., and Weber, C., 8.
Frankland, 24.
Franklin Tarsulat, 878.
Franquet, E., 255, 764.
Franquet, H., 687.
Franx, *see* Fendler.
Frauenberger, J., 763.
Freely, E., 398.
Freeman, J., 784.
Freerichs, P., 524.
Fremery and Bronnert, 497.
Fremery, Bronnert and Urban, 497.
Fremery, M., and J. Urban, 497, 501, 502, 503, 504, 1057.
Fremery, *see* Bronnert.
Fremy, 3.
French Commission, 24.
Frenzel, 844.
Freund, A., 176.
Freundler, P., and E. Damond, 187.
Friedel, 178.
Friedemann, *see* Opfermann.
Friedl, A., and C. Weizmann, 243.
Friedländer, M., and P. Tuebben, 704, 792.
Friedrich, *see* Sommer.
Friedrich, E., 515, 541.
Friedrich, P., 515.
Fritsch, T., 419.
Fritzsche, F. & Co., 21, 244, 791.
Frost, W., and W. Harvey, 812.
Fry, G., 789, 843.
Fulton, O., and M. Gillard, 788, 843.
Furman, J., 664, 739, 775, 776.
Furse, A., 328, 787.
Fürst Guido Donnersmarck Kunstseide u. Acetatwerke, 549, 992, 1025, 1080.

Gaedecke, 833.
Gaens, 899.
Gaevert-Naert, L. 1109.
Gage, 804, 808.
Galay, J., and B., 423, 791.
Galay, J. and G., 886.
Gale, W. J., and W. W. Boyden, 783.
Gallemaerts, 808.
Gamet, V., 816, 819.
Ganghofer, *see* Paal.
Gannett, D., 802.
Garbarini, G., 205.
Garbin, E., 620, 780.
Garbin, E., and G. Gérard, 620.
Garbin, G., G. Gérard, and C. Gérard, 620.
Gardner, 1060.
Gardner, P., 10.
Gardner, W., 1069.
Gartenmeister, 213.
Gartrell, J. H., 794.
Gaudin, *see* Millon.

Gaudin, 23, 828, 829.
Gautier, G., 361, 363.
Gawlich, G., 415.
Gay, *see* Boistesselin.
Gebauer, J., 553.
Geinsperger, 990.
Geller, P., 781.
Gemberling, *see* Bigelow.
General Electric Co., 992, 1029.
Gentieu, G., 125, 780, 908.
Gentieu, G., and R. Waddell, 957.
Gentil, 187.
Gérard, *see* Garbin.
Gérard, 52.
Gérard, 785, 879.
Gérard, G. and C., 790.
Gérard, M., 333, 518.
Gerber, N., and M. Craandjik, 212.
Gerhardt, 758.
Gérin, *see* Vignon.
Germain, 303, 485, 491.
Germain, P., 629.
Gervais, F., 754.
Gestetner, D., 322.
Ghiulamita, D., 721.
Giaeomini, 808.
Giaja, *see* Bierry.
Gilchrist, J., 216, 781.
Gill, S. E., *see* Stewart.
Gill, W., *see* Gill, A.
Gill, 262.
Gill, A. and W., 308, 786.
Gillard, *see* Fulton.
Gillet, 582.
Gillet, C., 253.
Gillet, L., 1085.
Gillmore, *see* Wood.
Gillot, T., 361, 424, 783.
Gilmore, G., 637, 779.
Gilpin, J., 458.
Gilson, 794, 804.
Girard, 6, 1004, 1038, 1046.
Girard, A., 986.
Gladstone, 24.
Gladstone, J., 1057.
Glaser, C., 241, 244, 780.
Glaser, *see* Heydenhauss.
Glum, O. & Co., 20.
Gnop, 178.
Gocher Oelmuhle Gebr. van der Boseh, 530, 531.
Göckel, 67.
Gocbel, 48.
Goetter, H., 582, 778.
Golbe, 177.
Goldman, G., 423.
Goldscheider, 339.
Goldsmith, 741.
Goldsmith, B., 304, 346, 400, 411, 432, 434, 761, 763, 777, 778, 779, 780, 786.
Goldsmith, G., and A. Merrill, 709, 777.
Goldsmith, J., 240, 244, 253, 256, 788, 790.
Goldsmith, J., & British Xylonite Co., 253.
Golonya, E., 362.
Gonon, *see* Soc. Gen. des Films.
Goodson, *see* Richmond.
Goodwin, *see* Maequenne.
Goodwin, H., 778, 839, 846.
Göppinger Papier-fabrik, 362.
Gorrand, G., 485, 790.
Gorsline, C., 810, 812.
Gostling, M., 2.
Göttig, 183, 203.
Gottschalk, 271.
Gottstein, L., 1085.
Goulbourne, *see* Tuteur.
Gould, C., 789.
Govers, *see* Austen.
Govers, F., 267.
Goyrand, G., 815.
Grandquist, 485, 788.
de la Grange, E., 486, 788.
Granger, A., 699, 782.
Grant, D., 960.
Grasser, *see* Smith.
Gratz, 208.
Gray, 387, 786, 787.
Gray, C., 350, 789.
Gray, W., 200.
le Gray, 828.
Greene, *see* Le Bel.
Green, A., 2, 1003.
Green, A., and A. Perkin, 2, 29, 1003, 1036.
Green, W., 361, 365, 487, 785.
Greening, *see* Jack.
Greening, F., 72, 74, 157, 298, 366, 687, 699, 749, 773, 776, 783, 784, 785.
Greenish and Wilson, 817.
Gregory, H., 312, 780.
Greisheim-Elektron, 172.
Grieger, 336.
Grimm, 177.
Grimoin-Sanson, *see* Phillips.
Grimoin-Sanson, R., 408.
Grindel, 899.
Gripon, M., 813.
Grognot, L., 758.
Grote and Pinnetta, 178.
de Grousilliers, H., 787.
Grubbs, S., and E. Franeis, 810.
Gruechoff, *see* Rodet.
Grüne, F., 783, 829.
Grünewald, J., 844.
Guadagni, G., 500, 530.
Guareschi, 172.
Gubb, A., 823.
Guersant, 819.
Guibert, 23.
Guignard, *see* Pereire.
Guilleteau-Chaput, L., 361.
Gulland, 807.
Gummi-u. Zelluloidfabrik Mannheim, 573.
Gummiwaren Fab. Harburg-Wien, 763.
Gustavson, 183.
Gutbier, A., 768.
Guttmann, 42, 51, 82, 459, 899, 943, 966.

Haber, 46, 1099.
Hackenberg, J., 713, 779.
Haddan, 119, 262, 531, 785, 788.
Haeussermann, C., 750.
Hafely, 724, 777.
Hafely, A., and J. Redlefsen, 724, 777.
Hagelberg, 366, 787.
Hagemann, C., and T. Zimmerman, 629, 779.
Hahn, 311, 784, 786.
Haitinger, 181.
Hake and Bell, 37, 50.
Hake and Lewis, 50, 52, 117.
Haldane, 928.
Hale, *see* Crane.
Hale, R., 301, 367, 785.
Hall, C., and W. Snelling, 891.
Hall, W., 763.
Hall Bros., 23.
Halle and Born, 799.
Haller, 81, 239.
Haller, A., 1085.
Haller, R., 1062.
Halliburton, 1.
Hallium, D., 146, 783.
Halphen, G., 169.
Hamburger, *see* Skraup.
Hamerton Mfg. Co., 572.
Hamlin, *see* Ernst.
Hamlyn-Harris, R., 798.
Hammond, J., 349, 786.
Hanauer Kunstseidefabrik, 499, 521.
Hanausek, 458, 551.
Hann, 574, 576.
Hansen, 747.

Hanus, 148.
Hareourt, 753.
v. Hardt-Stremayr, E., 990.
Hargreaves, 72, 787.
Hargreaves, A., and Curtis & Harvey, 947.
Hargreave and Rowe, 973.
Harries, C., and A. Neresheimer, 244.
Harris, N., 811.
Harriss, J., 815.
Harrison, *see* Stevens.
Harrison, C.,W. Bate, and W. Perks, 388.
Harrison, E. and C. Thurber, 695, 778.
Harrop, C., 338.
Hart, A., 785.
Hart, H., 413.
Hart, N. and R. Baeon, 732, 774, 784.
Hartig, 45.
Hartmann, F., 361.
Hartwig, 149.
Harvey, *see* Curtis.
Harvey, *see* Frost.
Harvey, W., 687, 777.
Hase, G., 596.
Haskell, H., 681, 780.
Hassaek, C., 549, 551, 553, 555, 557.
Hathaway, G., 968.
Haufman, S., 702.
Hayes, J., 580.
Haymen, H., 328, 783.
Hazelberg, W., 743, 786.
Healey, E., 496.
Heberlein & Co., 485, 788.
Hébert-Dillette, *see* Dilette.
Heeren, *see* Kamarsch.
Heermann, *see* Perl.
Heermann, P., 488.
Hefner, 228.
Heidemann, 906.
Heider, 809.
Heiderstadt, 837.
Heil, H., and Evan den Kerkhoff, 419.
Helbronner, A., and E. Vallee, 518.
Hellberg & Pertseh, 154, 787.
Heller, J., 799.
Hellriegel, C., 412, 762, 788.
Henekel - Donnersmarek, G., 1004, 1007, 1037.
Henderson, R., 902.
Henderson, T., 782.
Hengst, 59, 60, 61, 785, 788.
Henis, *see* Morane.
Henking, 809.
Henley, W., and G. Sutton, 788.
Henly, T., and D. Spill, 699, 783.
Hennebutte, H. and A. Moussen, 1085.
Henrite Explosives Co., Ltd., 962.
Henry, M., 24, 325, 571, 782, 788.
Hensen, P., 763.
Henson, 413.
Henson, H. H., 782.
Herbig, W., 1058.
Hermit, E., 406, 790.
Herodotus, 13.
Herring, F., 723.
Herstein, B., 116, 780.
Hertkorn, 243, 245, 248, 780, 791.
Hertzog, 81.
Hervier, P., 815.
Herz, 188, 429.
Herz, J., 787.
Herzfeld, *see* Wyss.
Herzfeld, H., 273.
Herzog, *see* Süvern.
Herzog, 458, 479, 549.
Hesekial, A., 844.
Hess, 977.
Hesse, A., 245, 780.
Heuseh, E., 421, 788.
Heussermann, 50, 1027.
Hey, *see* Smith.
Heydenhauss. H., 781.
Heydenhauss, H., A. Banhegyi, and K. Glaser, 763, 791.
Hiekey, P., 802.
Hildebrand, 624.
Hill, A., 20, 412.
Hime and Noad, 503.
Himmel, 311.
Hlasiwetz, 1059.
Hoehstetter, F., 794.
Hodgkinson and Perkin, 172.
Hofman, H., 750.
Hoffmann, 798.
Hoffmann, A., 207.
Hoffmann, H., 20.
Hoffmann, P., 458.
Hofmann, K., 1032.
Hofmeier, 19.
Hogben, 574.
Hoggson, S., and G. Pettis, 629, 774.
Höhnel, 551.
Hoitsema, 30, 977.
Holde, 272.
Holley, C., 274.
Hollings, A., 965.
Hollins, R., 791.
Hollins and Taylor, 60.
Holmes, 55, 56.
Holmes, F., 779.
Hömberg, 526.
Honeymoon, G., 261.
Hönig & Sehubert, 49.
Hooman, T., and J. Maliszewski, 782, 829.
Hoover, A., 263.
Hope, 261.
Hörk and Druge, 469.
Horn, P., 764.
Horn, W., 596.
Horney, Major O. C., 96, 902, 937.
Horstley, 982.
Horteloup, 60, 61, 790.
Horwitz, 362.
Hothersall, J., 401, 787.
Hough, 54.
Hough, A., 779, 780, 789.
Hourier, 178.
Howell, *see* Winkler.
Howard, 899.
Howkins, 412.
von Hübl, 831, 832, 877, 889, 890.
Hübner, 7, 485, 792.
Hübner, J., 1058.
Hübner, *see* Wegelin.
Hübner and Pope, 45.
Huek, A., and L. Fischer, 312, 788, 789, 844.
Hüe, *see* Eibner.
Hüe, G., 861.
Hull, *see* Barratt.
Hull, G., 260.
Hummel, 517.
Hunæus, 727, 786.
Hunsalz, *see* Stephan.
Hunt, R., 661, 773.
Hunt, W., 699.
Hunt and Eastwood, 325, 775.
Hüseher, 518.
Huss, *see* Börner.
Hutehinson, A., 362.
Huwart, E., 485.
Hyatt, see Lefferts.
Hyatt, I., 577, 579, 666, 702, 775, 783.
Hyatt, I. and J., 601, 630, 716, 773, 783.
Hyatt, I. S. and J. W., and J. A. Perkins, 783.
Hyatt, J., 107, 130, 344, 569, 576, 578, 579, 581, 588, 593, 600, 602, 640, 650, 653, 654, 660, 662, 668, 669, 670, 703, 704, 706, 707, 710, 711, 712,

719, 720, 726, 727, 730, 731, 732, 736, 773, 774, 775, 776, 777, 784, 863.
Hyatt, J. and I., 651, 773, 783.
Hyatt, J., and C. Burroughs, 652, 774.
Hyatt, J., and T. Crane, 600.
Hyatt, J., and J. Everding, 590, 776.
Hyatt, J., and J. Jarvis, 119.
Hyatt, J. W., and C. S. Lockwood, 775.
Hyatt, J. W., C. S. Lockwood, and J. Stevens, 774.
Hyatt, J., and F. Pool, 132, 775.
Hyatt, J., F. Pool, J. Everding, J. Stevens, and W. Wood, 135, 775.
Hyatt, J., J. Stevens, and W. Wood, 581, 589, 775.
Hyatt, J. W., Wood, W. H., Stevens, J. W., and Everding, J., 775.
Hyatt Mfg. Co., 577.

Ilges, 204.
Ilisch, F., 815, 823.
Illinois Pharmaceutical Review Comm., 820.
Independent Powder Co., 949.
Inoue, *see* Takeuchi.
International Smokeless Powder & Chem. Co., 902.
Isb, 208.
Iseki, S., 790.
Ivatts, E., 781.
Ives, F. E., 781, 879.

Jack, W. and F. Greening, 364, 784.
Jacob, 344.
Jacob, C., 308, 774, 783, 784.
Jacque, 52, 53.
Jacqué, M., 969.
Jaeger, P., 346.
James, B., 402.
Jannin, L., 517, 721.
Jarvis, J., 150, 678, 703, 744, 776.
Jarvis, *see* Hyatt.
Jarvis, *see* Jones.
Jarvis, *see* Kipper.
Jeanjeau, 181.
Jelinek, O., 798.
Jellicoe, *see* King.
Jenks, *see* Cross.
Jentsch, E., 543.
Jenny, P., 485.
Jermolajeff, 187.
Jetter, E., 430, 687, 789.
Jeune, Sir F., 405, 906.
Job, A. and E. Tomlinson, 699, 782.
Johnston, *see* Reid.
Johnston, *see* Smith.
Johnston, J., 782, 828.
Johnston, R., 731, 774.
Johnston, S., 177.
Johnston and Borland, 900.
Jolles, M., and L. Lilienfeld, 787, 843.
Joly, 422.
Jones, 413.
Jones, F., 933, 935, 941.
Jones, F., and J. Jarvis, 642, 776.
Jones, G., 908, 947.
Jones, J., and F. J., 783.
Jones, N., 699, 772, 773.
Jones, W., 362.
Jordan, 797, 802, 806, 808, 810.
Joseph, L., 788.
Jougla, M., 881.
Journoud, J., 785.
Joyce, *see* Crane.
Judson & Borland, 960.
Julich, B., 536.
Julius, 44.
Jung, C., 763.
Junghans, A., 320.
Junk, *see* Bergmann.
Junker and Degener, 208.
Justice, P., 398, 749, 784.
Justin, *see* Müller.

Kachler, 240, 756.
Kahlbaum, 815.
Kailian, A., 179.
Käinper, R., 1032.
Kaiser, H., 1085.
Kalhau, 178.
Kalle & Co., 251.
Kamarsch and Heeren, 22.
Kanouse, *see* Sanborn.
Kanouse, C., 580, 774.
Kanouse, C., and A. Sanborn, 701, 774.
v. Kapff, S., 781, 1005.
Kaposi, 820.
Kayser, E., 1091, 1108.
Kebler, L., 237.
Keil, G., and K. Plischke, 312.
Keller, H., 346.
Kellerman, K., 812.
Kelvin, Lord, *see* W. Thompson.
Kempshall, E., 416, 725, 737, 789.
Kendall, J., and R. Trested, 361, 575, 773.
Kennedy, 342.
Kennedy, A., 369, 418, 432, 778.
Kennedy, P., 779.
Kent Machine Works, 281, 283, 286.
Ker, 780.
Ker, E., 530.
Ker, J., 364, 405, 787.
Ker, W., 672.
Kerr, *see* Paterson.
Kiliani, H., 2.
King, C., and R. Jellicoe, 397, 786, 843.
King's Norton Metal Co., 943.
King Powder Co., 956.
Kingscote, E., 362, 412, 788.
Kingsley, J., 806.
Kipper, E., 649, 657, 685, 703, 707, 775, 776.
Kipper and Edson, 718, 775.
Kipper and Jarvis, 705, 777.
Kirch, *see* Landerce.
Kirchner, E., 1078.
Kirk, *see* Scrshall.
Kirkhoff, *see* Heil.
Kismiensky, 974.
Kitschelt, M., 1066.
Kitsee, I., 157, 415, 619, 629, 779, 780.
Klar, 335.
Klaye, *see* Berl.
Klee, A., 262.
Kleeberg, 758.
Klein, *see* Bauer.
Klein, A., 20.
Klein, H., 831, 832, 835, 884, 890.
Klidiaschwili, 1008.
Klose, G., 307.
Klug, *see* Lübbertsmeier.
Knaster, *see* Pianko.
Knecht, 7, 62, 115.
Knight, 521.
Knoevenagel, E., 781, 989, 992, 1024, 1050.
Knoevenagel and H. Lebach, 992.
Knöfler, O., 357, 489, 521, 787.
Knoll & Co., 758, 994, 1006, 1024, 1033, 1039, 1050.

Knop, 22.
Koch, F., 240, 241, 246, 790.
Kockel, 753, 755.
Koechlin, 471.
Kohl, F., 763.
Kolbe, *see* Fittig.
Kolbe, 174, 184.
Kölliker, *see* Löwig.
Komppa, G., 238.
Komppa, and A. Bergroth, 238.
Kondalow, I., 243.
König, *see* Skraup.
Konowaloff, 240.
Kopp, 174, 188.
Kopp and Schiff, 148.
Kossuth, F., and L., 783, 829.
Koyl, C., 718, 776.
Kracht, A., 498.
Kraemer, G., 524, 781.
Kraemer and Pinner, 178.
Krais, *see* Akyroyd, 1110.
Krais, P., 233, 780.
Krais, P., and Bradford Dyers Association, 790.
Krajewski, L., 436.
Kramer, 182, 265.
Kramer, M., 340.
Kraut, K., 758.
Kranzfeld, 821.
Kreutzer, 828.
Kreysler, 172.
Krische, W., and A. Spitteler, 763.
Kron, 90, 786.
Kron, R., 421, 789.
Krug, W., 682, 779.
Krug, W., and J. Blomen, 627.
Kruis, *see* Rayman.
Kruis and Rayman, 180.
Krauss, 228.
Krysinsky, 795.
Krystalline Co., 846.
Kubo, I., 808.
Kuhlmann, 50.
Kuhlmann, F., 422.
Kuhn, 840.
Kuhn, H., 786, 844.
Kultschitzsky, 805.
Kuner, A., and P. Milet, 248.
Kur, E., 1111.
Kürtz, 312.
Kurz, C., 1091, 1108.
Kurz, L., 781.
Kynoch, Ltd., *see* Cocking.
Kynoch, Ltd., 937.
Kynoch, & A. Cocking, 931.
Kynoch, Ltd., & A. Cocking, 929.

Labbé, L., 626.
Labbe, L., and V. Pauthonier, 843.
Labbe, L., and H. Perret, 851.
Laborde and Lorifer, 744.
Lachowitz, 187.
Lackawanna Railroad, 346.
Lacroix, G., 536.
Ladenburg, A., 5.
Lafais, *see* Soc. Boullier.
de La Farge, J., 782, 829.
Lagneau, H., E. Nebel, and M. Vignes, 627
La Grange, 415.
Laire, 759.
Lake, W., 498.
Lamb and Boyd, 151.
Lambert, 323, 783.
Lamm, C., 946.
Landerc and Kirch, 722.
Landolt, 769.
Landsberg, 993, 1038.
Lane-Fox, 520.
Lange, *see* Selwig.
Langhans, R., 491, 513, 778.
Langlois, C., 782, 828.
Lansing, R., 747, 777.
Larsson, *see* Schauman.
La Société Bemberg, 1005
La Soc. Franc. de la Viscose, 1075.
Lassaigne, J., 815.
Lasche, *see* Schroeder.
Laudien, *see* Schraube.
Lauraguais, 230.
Lauras, E., 819, 823.
Laureau, G., 362.
Laurie, A., and F. Bailey, 324, 790.
Law, D., 1003, 1008.
Lebach, *see* Knoevenagel.
Lebach, H., 760.
Le Bel, 175, 180, 187.
Le Bel and Green, 185.
Lebel, *see* Phillips.
Le Brocq, L., 931.
Lebreil, F., and R. Desgeorge, 763.
Lebrun, *see* Carnoy.
Leclaire, C., 1071, 1083.
Leclerc, *see* Mabille.
Lecoeur, 497, 498, 781.
Lecoeur, A., and P. Rudolf, 781.
Le Crinoid Soc. Anon., 791.
Lederer, 144, 171, 253, 487, 759, 987, 995, 996, 1002, 1011, 1013, 1014, 1015, 1017, 1022, 1027, 1028, 1037, 1038, 1040, 1041, 1042, 1046, 1047, 1048, 1049, 1051.
Leder, P., 781.
Lee, A., 794, 797, 799, 801, 804.
Lee and Petavel, 935.
Leemans, P., 791
Leemans, P., and V. Turnhout, 246.
Lefevre, 750.
Lefevre, L., 1056.
Lefferts, *see* Stevens.
Lefferts, M., 132, 645, 698, 727, 728, 729, 730, 741, 774, 775, 776, 784.
Lefferts, M., and J. Hyatt, 745, 776.
Lefferts, M., and J. Stevens, 742.
Legray, *see* le Gray.
Lehmann, *see* Stocker.
Lehman, 951.
Lehner, A., *see* Lehner, F.
Lehner, 49, 357, 471, 473, 477, 491, 522, 732, 778, 779, 786, 787, 788, 791, 1084.
Lehner, F. and A., 1063, 1084.
Leibenthal, 228.
Leidesdorf, M., 1081.
Leidy, 816.
Lémary, J., 829.
Lemassena, *see* Stanley.
Lendenfeld, 809.
Lengfellner, K., 411.
von Lenk, 23, 38, 73, 773.
Lenning, C., 75.
Lenzl, 51.
Lenze, *see* Will.
Leonard, *see* Babcock.
Leonard, 272.
Leonard, M., 939.
Leonard, W. A., 783.
Leroux, *see* Bretau.
Leroux, A., 964, 969.
Le Roy, A., 746, 776.
Lester, J., 1058.
Letalle, *see* Billing.
Leuchs & Co., 1057.
Levi, *see* Schroeder.
Levy, 810.
Levy, C., 1099.
Levy, M., 787, 833.
Levy and Ernst, 458.
Lewin, *see* Mislin.
Lewin, S., and A. Blumenthal, 790.
Lewin, S., 409.

Lewinsohn, 409.
Lewinsohn, M. and J., 409, 786.
Lewis, V., 357.
Lewis, *see* Hake.
Lewthwaite, 364, 365, 569, 783, 784.
Ley, H., and M. Ulrich, 197.
Lheure, L., 962.
Libbey, J., 749.
Lichtenberg-Madsen, D., 721, 747, 788.
Lieben and Rossi, 185, 213.
Liebert, E., 149, 208.
de Liebhaber, 260, 261.
Liebrecht, M., 387.
Liebschütz, 44.
Liedbeck, A., 124, 790.
Liedbeck, P., 922.
Lightoller, C., and Longshaw, J., 1057.
Lilienfeld, *see* Jolles.
Lilienfeld, L., 416, 421, 781, 1092, 1108.
Liman, 816.
Limmer, F., 880, 881, 882, 883.
Linde, 494.
Lindemann and Matteu, 1060.
Lindet, 192.
Lindner, O., 428, 785.
Lindsay, W., 251, 781, 792.
Lindsley, *see* Peters.
Lindsley, M. F., 956.
Linebargin, *see* Long.
Ling, A., 2.
Ling, A., T. Rendle and E. Colbrook, 791, 886.
Linkmeyer, *see* Thiele.
Linkmeyer, R., 497, 507, 509, 781.
Linkmeyer, and M. Pollak, 508.
Linneman, 183, 184, 185, 230.
Linnet, 189.
Lister, H., 409, 786.
Lister, S, and J. Reixch, 409, 784.
Little, *see* Mork.
Little, A., 1034, 1103
Litzendorff, J., 768.
Livache, 313, 337.
Livermore and Parrish, 816.
Livonius, 829.
Lloyd, Ltd., *see* Anthés.
Lockwood, C., 146, 774.
Lockwood, D., 647, 649, 663, 670, 774.
Lockwood, W., 699.
Locquin, R., 199.
Loewe, B., 526, 791.
Loewenthal, R., 1078.
Loisif, *see* Diamanti.
Lombardi, A., 784.
Loncle, A., and H. Chartrey, 485.
Long and Linebargin, 180.
Longshaw, *see* Lightoller.
Lorenzen, J., 819.
Lorifer, *see* Laborde.
Lorsch, 721, 723.
Lorin, 232.
Lott, E., 768.
Louise, 273.
Lourmiet, 494.
Louvain, 822.
Love, W., 397, 788.
Lowe, H., 10.
Löwig and Kölliker, 1.
Lübbertsmeier, A., and G. Klug, 340.
de Luca, 50.
Luciani, J., 948.
Lucius, *see* Meister.
Luck, A., 787, 788.
Luck and Cross, 120, 779.
Luck and Durnford, 78, 118, 787.
Luck, A., and C. Nichols, 943.
Lukacs, W., 1057.
Ludovici, W., 607.
Luedy, F., 247.
Luft, A., 758.
Lumière & Sons, 486, 526, 527, 529, 790, 791, 862, 883, 1016.
Lumpp, *see* Schmidt.
Lundholm and Sayers, 927.
Lunge, 25, 26, 29, 40, 44, 65, 66, 71, 102.
Lunge and Weintraub, 44.
Lunge, Weintraub and Bebie, 26, 29.
Lüppo-Kramer, 876.
Lüttke, H., 304, 394, 575, 789, 843, 968.
Lutkermolle, J., 246, 791.
Lyncke, H., 1091.
Lynn Superior Co., 906.

McArthur, E., 815.
McCaine, D., 307.
McCaine, Daniel and David, 613, 775.
McCaine, W., 146, 613, 774, 775.
McCandless, 273.
McCaw, W., 783, 829.
McClelland, 581.
McClelland, J., 253, 575, 657, 673, 674, 675, 702, 719, 773, 775, 776, 783.
McCrae, J., 811.
McDonald, 24, 100.
McDonough, 786, 844.
McDougal, A., 326, 786.
McElroy, K., and C. Ellis, 626, 780.
McKay, *see* Adams.
McKay, H., 433, 779.
McKenzie, *see* Markwald.
McLaren, *see* Sutherland.
Macaire, G., 838.
MacIntosh, J., 297, 413.
MacIntosh, J., and G. Rhodes, 571.
Mackean, W., 358.
Mabille, A., and G. Leclerc, 625.
Macaire, G., 788, 870.
MacDonald, *see* McDonald.
Mach, *see* Süvern.
Macintosh & Co., *see* Smith.
Macke, 823.
Mackean, W., 787, 788.
Mackie, *see* Trench.
Mackie, 74, 773.
Mackintosh, J., 782.
Mackintosh and Rhodes, 59, 782.
Macquenne and Goodwin, 990.
Maderna, *see* Coffetti.
Maffei, *see* Cantu.
Magnes-Lahrens, 815.
Magnier, *see* Behal.
Magnier, *see* Tissier.
Magnier, P., and L. Doerflinger, 487, 784.
Magnus & Co., 573, 605, 623.
Main, *see* Swete.
Malenkovic, 52.
Malfitano, 812.
Maliszewski, *see* Hooman.
Manasse, 759.
Mangin, E., 469.
Manissadjian, *see* Merckens.
Manissadjian, H., 626, 791, 1011.
Manoukian, M., 1066.
Mansell, 928.
Manns, J., 266, 378.
Marble, *see* Curtis.
Marcus, D., 394.
Marcusson, J., 273.
de Mare, F., 207, 357.
Margosches, 574.
Margosches, B., 1056.

Margraf, 574.
Marino, P., 76, 625, 628, 780, 790, 791.
Marion, A., 829.
Mark, 808.
Markwald, 175, 177.
Markwald and McKenzie, 175.
Markwald, W., & E. Nolda, 188.
Marpmann, 806.
Marsden, F., 986, 993.
Marsden Co., 60, 429, 787, 788.
Marsh and Stockdale, 246.
Marshall, 928.
Martin, *see* Field.
Martini, C., 296, 781, 791.
Martin, Spellbury & Emerson, 183.
Martinsen, 36.
Maskell, 687.
Mason, *see* Elkington.
Masson, 46.
Massot, W., 458, 549, 1084.
Mathias, J. F. and J. G., 409, 783.
Matten, *see* Lindemann.
Matthews, J., 564, 811, 813.
Maurey, *see* Pelouze.
Maurey, 50.
Mawson and Swan, 845.
Maxim, 749, 916, 920, 929.
Maxim, H., 777, 778, 786, 928, 936, 939.
Maxim, Hudson, 781, 940.
May, *see* Williams.
Mayberry, 147.
Mayer, A., 246.
Mayer, *see* Michaelis.
Maynard, *see* Bigelow.
Maynard, 144, 815, 816.
Maynard and Bigelow, 23.
Maywald, *see* Austen.
Meers, S., 401, 780, 790.
Meissner, P., 429, 787.
Meister, Lucius & Brüning, 254, 255, 308, 499, 732, 779, 787, 788, 789, 840, 878, 887.
Mellez, 816.
Menard, *see* Domonte.
Mendeleff, 25, 26, 178, 183, 227, 901.
Mennons, M., 571, 782.
Menschutkin, 213.
Mentor, *see* Skraup.
Mercer, J., 9, 502, 1057.
Merchants Mfg. Co., 580.
Merckens, W., and H. Manissadjian, 1012.
Merian, 687.
Merkel and Schiefferdecker, 794.
Merkens, *see* Smith.
Merkens, W., 880.
Merriam, L., 784.
Merrill, *see* Goldsmith.
Mertens, E., 840.
Mertz, E., 527, 546.
Mertz, V., 510.
Mesinheimer, *see* Büchner.
Mestaniz, R., 763.
Metschnikoff, 810.
Mettler, C., 251.
Meyer, *see* Tiller.
Meyer, E., 803.
Meyer, F., 744, 791, 806, 1012, 1031.
Mialhe, 816.
Michael, A., 1007.
Michaelis, G., 157, 266.
Michaelis, G. and W. Mayer., 152.
Miglioretti, *see* Cantu.
Mihr, 70.
Mijnessen, C., 1013.
Mikolajczak, A., 947.
Miler, 996.
Miles, 986, 1038.
Miles, G., 997.
Milet, *see* Kuner.
Miley, M., and A., 779.
Miley Color Photograph Co., 789, 878.
Militz, A., 1010.
Millar, 459, 517.
Miller, 24, 265.
Miller, C., 517, 798.
Miller, H., 608, 614, 661, 666, 716, 717, 718, 719, 776, 777, 778.
Miller, O., 1058.
Miller, W., 216, 781.
Millon and Gaudin, 22.
Mills, B., 789.
Mills, J., 322.
Minajeff, W., 544, 561.
Minnis, T., 309.
Minns, H., 362.
Minot, C., 798, 802.
Misko, J., 726.
Mislin, E., and L. Lewin, 199.
Mitchell, *see* Smith.
Mitchell, A., and C. Smith 210.
Mitrophanow, P., 795, 806.
Mitscherlich, 168.
Moh, O., 781, 844, 861.
Moh, O., A. Heskiel, and J. Grünewald, 788.
Moir, J., 973.
Moitessier, 758.
Moldenhauer, C., and C. Heinzerling, 784.
Moleshott, 823.
v. Moliter, H., 350, 789.
Monie, 12.
Monin, 823.
Monroe, O., 617, 774.
de Montlord, G., 405, 780.
Moran, *see* Clandon.
Morane, *see* Desmarais.
Morane, L., 91, 526, 623, 788, 792.
Morin, 22, 23, 177, 178, 182, 189.
Morison, J., 1084.
Mork, 999, 1049.
Mork, H., 781, 998, 1025, 1036.
Mork, W., 987.
Mork, Little and Walker, 996, 1034, 1039, 1047.
Morpurgov and Tirelli, 810.
Morrell, R., 273.
Morrison, *see* Smith.
Morrison, 820.
Morrow, H. W., 18.
Morton, W., 539.
Moschatos and Tollens, 758.
de Mosenthal, 43, 45, 83.
Moss, 458.
Moss, G., 838.
Mousseu, *see* Hennebutte.
Mowbray, G., 75, 81, 104, 106, 135, 572, 690, 775, 776, 777, 786, 805.
Moyat, 461.
Mugdan, *see* Paskenasy.
Mugdin, M., 989.
Mulder, 176, 177.
Mülhäuser, 56, 59.
Müller, *see* Bosch.
Müller, 192, 522.
Müller, Arthur, 3, 521.
Müller, E., 72, 491, 788.
Müller, F., 799.
Müller, H., 409, 416, 782, 791.
Müller, J., 678.
Müller, M., 1063, 1080.
Müller, O., 542.
Müller, R., 499.
Müller and Co., 964.
Müller and Justin, 28.
Munch, 187.
Munroe, C. E., 75, 81, 323, 898, 900, 902, 939, 944, 967, 982.
Murray, Benjamin L., 815.
Murray, G., 362.

Murumow, J., J. Sack, and B. Tollens, 990.
Muschamp, 74, 773.
Musgiller, 816, 823.
Musker, A., 966.
Myers, *see* Fox.

Naeeari and Pagliani, 230.
Naert, L., 1106.
Nagel, O., 250, 778.
Namé, 825.
Napper, *see* Courtauld & Co.
Nasehold, W., 246.
Nastjukow, 81.
Nathan, 73, 84, 97, 119.
Nathan, F., 929, 976.
Nathan, F., J. and W. Thomson, 126, 789.
Naudin, *see* Schützenberger.
Naudin, L., 1075.
Naviasky, 197.
Nebel, *see* Lagneau.
Neidhardt, A., 261.
Nelbing, H., 408.
Neresheimer, *see* Harries.
Nettleford, 40.
Neuman, *see* Büttner.
Neumann, E., 137.
Neumann, L., 977.
Neumayer, 799.
Newbold, *see* Oberle.
Neweomb, *see* Osborn.
New Explosives Co., Ltd., 962.
New Explosives Co., and J. Carter, 966.
Newton, 699.
Newton, W., 782, 828.
Neymann, *see* Dosselman.
Nichols, *see* Luek.
Nicholls, T. and W., 748, 784.
Nieholson, E., and A. Price, 121, 783.
Nickerson, 698.
Nicolardot, P., and G. Chertier, 1111.
Nieolardot, P., and L. Clement, 273.
Nieske, A., 307, 788.
Nikiforow, 802.
Nikolsky, W., 923.
Nitritfabrik Akt. Ges., 1005.
Noad, *see* Hime.
Noad, J., 362.
Nobel, A., 57, 366, 411.
Nobel's Explosives Co., 792, 961.
Noble, 929.
Noble, A., 786, 898, 900, 946.
Noble, F., 947.
Nocard, 810.
Nocard and Roux, 810.
Noelting, E., 1108.
Nolan, A., 892.
Nolda, *see* Markwald.
Normann, W., 502.
Norris, R., 782, 785, 828.
Norton and Preseott, 157.
Notelle and Leroux, 60.
Novy, 810, 811.
Nowak, O., 519.
Nowicki, 78.
Nuseh, F., 789.

Oakes, 261.
Ober, *see* Whitney.
Oberdorffer, 335.
Oberle, E., 520.
Oberle, E. and H. Newbold, 485.
Obermüller, P., 977, 1048.
Oblasser and Theryc, 414, 786.
Obregia, 807.
Obst, 754.
E. Oester. Glanstoff, St. Polten, 563.
Oldroyd and Blakeley, 1110.
Oliver, F., 347, 415, 416, 751, 778, 786, 787.
Olivier, *see* Thomas.
Olivier, M., 1098.
Olivier, M., and E. Thomas, 1098.
Olszewski, A., 636, 637, 775.
Onimus, 228.
Opfermann, E., E. Friedmann & Aet. Ges. für Maschinenpapierfabrikation, 470.
Ordonneau, 178.
Ormdorff, 172.
Ornstein, L., 265.
Orr, A., 150, 300.
Ortmann, R., 762.
Orvis, 742.
Osborn, 262, 265.
Osborn, Neweomb, & Co., 577.
Osborne, T., 749.
Osmond, *see* Witz.
Ost, H., 989, 1036, 1040, 1041, 1042, 1043, 1047, 1052.
Ost and Westhoff, 7,117, 1041.
Ost, H., and Wilkening, 18.
Otto, 22.
Otto, G., 729.

Paal, C., and A. Ganghofer, 768.
Page, J., 349, 786.
Paget, *see* Borgmeyer.
Paget, L. 157, 227, 304, 777, 786.
Pagliani, *see* Naeeari.
Paisseau-Feil, C., 698.
Palk, E., and H. Bassett, 328, 780, 791.
Palmer, A., 459.
Pampe, F., 206.
Panzer, A., 755, 756.
Pareon, 81.
Parke, Davis & Co., 811.
Parken, W. C., 791.
Parkert, O., 312.
Parkes, A., 24, 145, 297, 298, 364, 395, 413, 429, 568, 570, 573, 578, 580. 595, 682, 782, 783, 784,
Parkes, H., 146, 775, 782, 784, 855.
Parkin, W., 625, 790.
Parkin, W., and A. Williams, 626, 788, 792.
Parkin, W., A. Williams, and F. Casson, 789.
Parnell, F. A., 10.
Parrish, *see* Livermore.
Parrish, 816.
Pasavant, *see* Reiehenbaeh.
Paskenasy, and M. Mugdan, 172.
Pasqualis, 460.
Passburg, E., 130.
Pasteur, 175, 186, 190, 460.
Pâtat, 309, 840.
Patent Leather Co. of Ameriea, 432.
Patent Spinnerei, A G., 1090.
Paterno, E., and F. Traetta-Mosea, 927.
Paterson, J., W. Dickson, and G. Kerr, 788, 877.
Pathe Frères, 1020.
Patronenfabr. Saxonia, 78.
Patten, 798.
Patterson, G., 902, 973, 976.
Patty, J., 781.
Paul, A., 273.
Pauly, H., 496, 501.
Pauthonier, *see* Labbe.
Pauthonier, V., 989, 1023.
Pavi, 820.

Pawlikowski, R., 499, 521.
Payen, 22.
Payne, A., 791, 871, 887.
Pease, 706.
Peek, *see* Stoak.
Pedlar, 175, 187.
Peel, W., 328, 787.
Peesarer, *see* Pissarew.
Pefer, 840.
Pegamoid, Ltd., 751.
Pegamoid Leathers Syndicate, 751.
Pegamoid Papers Syndicate, 751.
Pegamoid Wall Hangings Syndicate, 751.
Peiffer, J., and W. McCarthy, 784.
Peit, *see* Petit.
Peligot, *see* Dumas.
Pellatan, 174.
Pellen, M., 297, 782.
Pellerin, A., 1068.
Pellnitz, O., 274.
Pelouze, 21, 22, 23, 25, 50.
Pelouze and Maurey, 829.
Pennsylvania Railroad, 770.
Perdrix, L., 190.
Pereire and Guignard, 191.
Perelzveieh, V., and G. Rosenbuseh, 1035.
Perkin, *see* Green.
Perkin, *see* Hodgkinson.
Perkin, 186, 271.
Perks, *see* Harrison.
Perl, J., 153, 329, 786.
Perl, J., and P. Heermann, 329, 786.
Perret, *see* Labbe.
Perrot, 174, 176, 177, 178.
Perry, E., 785.
Person, 181.
Persoz, 149.
Persoz, J., 496.
Pertsch, *see* Hellberg.
Pervilhae, *see* Ratignier.
Pervilhac, H., 780.
Petavel, *see* Lee.
Petavel, J., 935.
Peters, 178.
Peters, G., and M. Lindsley, 956.
Petin, N., 363, 782.
Petit, A., 485, 733, 779, 788.
Petrifoid, Co. 127.
Pettis, *see* Hoggson.
Pettit, E., 783, 786, 829.
Pettit, S., 1065.
Peyrusson, E., 253, 629.
Pfaudler Co., 293, 294.
Pfeiffer, 458.
Pflug, L., 786.
Pfyl, 753.
Pfyl, B., and Rasenack, P., 755.
Phelan & Collender, 576.
Phelps, G., 749, 774.
Philipp, C., 243, 246, 780.
Philipp, J., and P. de Troussures, 362.
Phillipe, *see* Bussy.
Phillips, J., H. Lebel and R. Grimoin-Sanson, 362, 408.
Pianko, 442, 789, 791.
Pictet, 494.
Pianko, S., and M. Knaster, 440.
Piehler, S., 419, 786.
Pierre, 174.
Pierre and Puehot, 178, 182, 183, 204.
Pierson, W., 574, 575, 773.
Piesbergen, R., 366, 790.
Piest, 34, 62, 81.
Pifer, G., 791, 851.
Pillion, L., 626.
Pinel Frères, 1063.
Pinner, *see* Kraemer.
Pinnetta, *see* Grote.
Piobert, 22, 23.
Piquet, *see* Du Bosc.
Piria, R., 758.
Pissarew, S., 1063.
Pissarry, *see* Pissarew.
Pitehford, W., 207.
Pitman, 70.
Pitman, A., 699.
van Pittius, G., 951.
Plaissetty, A., 358, 491, 779, 787, 788, 789.
Plener, J., 784.
Pleus, B., 977.
Pliny, 13.
Plisehke, *see* Keil.
Plowman, A., 809.
Pokrowski, 798.
Pollacei, *see* Buscalioni.
Pollak, *see* Linkmeyer.
Pollet, A., 272.
Pollock, J., 346, 787.
Pond, F., 237, 247.
Pont, B., 782, 828.
Pontin, H., and T. Tolputt, 997.
du Pont, *see* Du Pont.
du Pont, A. I., 925.
du Pont, E., 781, 951.
du Pont, F. G., 777, 779, 787, 903.
du Pont, F. I., 781, 921.
du Pont, F. J., 943.
du Pont, A. F., and J. T. Thompson, 781.
du Pont de Nemours Co., 943, 949, 951, 952, 953, 955, 957.
Pool, *see* Hyatt.
Pool, F., 134, 774, 775, 776.
Pope, *see* Hübner.
Popoff, 187.
Popow, *see* Popoff.
Porter, A., 814.
v. Possanner, 1103.
Post, I., 699.
Poulverel, A., 274.
Powell, *see* Wynne.
Powells, H., 301.
Preaubert, L., 395, 788.
Preeht, *see* Eiehengrün.
Preeht, H., 172.
Pregl, *see* Skraup.
Prengl, F., 1008.
Prescott, *see* Norton.
Přibram, 231.
Price, *see* Nieholson.
Priekner, *see* Wagner.
Priestman, 262.
Prinee, F., 782.
Pringsheim, H., 191, 193, 198.
Pribram, 184.
Proctor, 425, 427, 823.
Proctor, Jr., 816.
Prost, P., and E. Michey, 626.
Provost, *see* Thomas, 1099
Prud'homme, M., 181, 212, 500, 1056.
Publishing, Advertising and Trading Syndicate, 751.
Pumphrey, A., 784.
Pyroxylin Mfg. Co., *see* Biekford.

Quin, J., 305.
Quinan, E., 118, 130, 790.

Rabe, 277.
Rabl, 808, 809.
Rabuteau, 178, 198.
Raethel, O., 788.
Ragg, M., 1059.
Raison Sociale Siebert, 1022.
Rakowski, *see* Doroschewski.
Rakusin, M., 169.
Ramel, J. D., 565.
Rampichini, F., 870.
Rand, C., 819, 823.
Randall & Stickney, 894.

Ransome, 24.
Raschig, F., 254, 780.
Rasmussen, *see* Ammundsen.
Rassow and v. Bonge, 36.
Ratignier, M., and H. Pervilhac, 423, 524, 861.
Rousset, H., 1056, 1081.
Rauter, G., 989.
Ravizza, V., 579.
Rawlins, *see* Bradford.
Ray, G., 574, 699, 773.
Rayman and Kries, 190.
Rayman, *see* Kruis.
Reagles, C., 257, 366.
Reagles, E., 773.
Reagles, I. V., 776.
Réaumur, 455, 1081.
Rebenstorff, H., 969.
Reddaway, F., 364, 789.
Redlefsen, *see* Hafely.
Redpath, L., 138.
Reed, D., 829.
Reeser, H., 748, 1022.
Regaud, C., 809.
Reichelt, 416.
Reichenbach, H., 776, 778, 787, 839, 846, 847.
Reichenbach and S. Pasayant, 777, 848.
Reid, W., 789, 899.
Reid and Earle, 304, 412, 430, 787.
Reid, P., and J. Eastwood, 420, 775, 784.
Reid and Johnston, 959.
Reisenfeld, H., and F. Taurke, 500.
Reishoff, T., 950.
Reixch, *see* Lister.
Rendle, *see* Ling.
Rentoul, *see* Robertson.
Rettenbacher, *see* Schneider.
Reubold, *see* Strehlenert.
Revy, 73, 773.
Rewidzoff, *see* Wyss.
Reynolds, 174.
Reynolds, J., 784.
Rheinische Gummi- und Zelluloid Fabrik, 255, 256.
Rheinischen Hartgummiwaarenfabrik, 573.
Rheinische Kunstseide Fabriks Akt. Ges., 502.
Rhodes, *see* MacIntosh.
Rhodes and Syme, 413, 782.
Riban, *see* Berthelot.
Ribbe, 574.
Richardson, B., 200, 820.
Richardson, F., and J. Bowen, 273.
Richmond, H., and J. Goodson, 181, 212.
Richter, H., 487, 789.
Riddle, R., 157, 172, 780.
Riedel, J., 239.
Rieder, J., 880.
Riekher, 174.
Rimell, J., 271.
Risler, M., 782, 829.
Rivière, *see* Clement.
Roberts, *see* Arnold.
Roberts, L., 13.
Robertson, 975.
Robertson, R., 119, 935.
Robertson, R., and W. Rintoul, 923.
Robertson and Smart, 979.
Robinson, J., 646, 778.
Robrecht, G., 943.
Rockwood, *see* Forster.
Rodberg, A., 947.
Röder, P., 825.
Rodet and Gruechoff, 810.
Roese, E., 350, 785.
Roesler, A., 240.
Roessler, S., 202.
Roger, A., 405.
Rogers, 175.
Rollason, *see* Barnwell.
Rollason, A., 297, 299, 364, 413, 429, 699, 782, 783, 829.
van Romburgh, 149.
Rose, E., 299.
v. Rosenberg, *see* Bredt.
Rosenbusch, *see* Perelzveich, 1035.
Rossi, *see* Lieben.
Rothwell, *see* Thornton.
Rouland, 763.
Roux, *see* Nocard.
Roux, C., 524.
Roux and Salembeni, 810.
Rouxeville, A., 251.
Rouxeville, E., 246, 599, 754, 780.
Rowe, *see* Hargreave.
Rowell, F., 776, 842.
Rowley, J., 361.
Rowney, 176, 177.
Royal Wetteren Gunpowder Faetory, 963.
Rubaschkin, J., 806.
Ruckteschell, 61.
Rüdakoff, T., and A. Alexandroff, 177.
Rüdeloff, J., and A. and W. Allendorff, 946.
Rüdeloff, R., 137.
Rudolf, *see* Lecoeur.
Ruffer, *see* Crendiroupoulis.
Runge, 1051.
Russe, W., 803.
Ryder, 805.

Sabatier and Senderens, 187.
Sabin, 305.
Sabussow, 806.
Sachs, J., 1057.
Sachsse, 4.
Sack, *see* Murumow.
Sackville, J., 1110.
Sadtler, 75, 574.
Saget and Süvern, 549.
Salant, W., 201.
Salembeni, *see* Roux.
Saltpetersaure-Industrie-Ges., 137.
Samuel, A., 325, 523.
Samways, D., 825.
Sanborn, *see* Brown.
Sanborn, *see* Kanouse.
Sanborn, 701, 702, 774, 775.
Sanborn, R., and A., and C. Kanouse, 700, 773.
Sandell Films and Plates, Ltd., 789, 861.
Sandy Hill Iron Works, 946.
Sanford, 23, 83.
Sanford, P. G., 959, 965.
Saposchnikoff, *see* Saposchikov.
Saposchikov, 35, 53, 83. 965.
Sarason, L., 759.
Sargent, J., 815.
Saron, see Beckmann.
Saunders and Craske, 417, 790.
Sauvage, A., 248.
de Sauverzac, 523.
Sauverzac, J., 486.
Sayee and Bolton, 829.
Sayers, *see* Lundholm.
Saytzeff, *see* Wagner.
Scott, *see* Arnold.
Schacht, 816.
Schaefer, *see* Thurber.
Schaffer, 753.
Schaffner, 74, 773.
Schallibaum, 808.
Schaumaň, F., and A. Larson, 523.
Scheele, 174.
Schenker, E., 964.
Schering, E., 75, 241, 244, 247, 248, 606, 775, 790, 791, 794, 796.
Schidrowitz, 210.

Schiefferdecker, *see* Merkel.
Schiefferdecker, 796, 809.
Schiff, R., *see* Kopp.
Schiff, R., 183, 188, 227, 229, 230, 231, 232.
Schindler, 815.
Schindler, *see* Morrison.
Schleicher & Schuell, 36.
Schloesing, 28.
Schloss, A., 988, 1005.
Schlumberger, *see* Bronnert.
Schmeidel, H., 787.
Schmerber, J., 252, 774.
Schmerber, C., and J. Arrault, 589,774.
Schmerber and Moraine, 1011.
Schmidt, 1.
Schmidt, O., 78, 248, 789.
Schmidt, W., 677, 777.
Schmidt, A., and H. Lumpp, 976.
Schmidting, J., 721, 779.
Schmiedel, H., 364.
Schmitz & Co., 241, 243, 244, 245, 248, 791.
Schneeberger, *see* Dreyfus.
Schneider and Rettenbacher, 829.
Schnitzler, G., 787, 873.
Schoder, R., 356, 787.
Schoenfelder, E., and E. Kehle, 787.
Scholler, 815.
Scholz, F., 799.
Schönbein, 22, 73, 568, 773.
Schönfeld, O., 763.
Schorlemmer, 183, 213.
Schotten, C., 758.
Schraube, C., and E. Laudien, 250.
Schrieb, H., 222.
Schreiner & Sievers, 573.
Schrieber, 723.
Schroeder, C., L. Lévi, and A. Lasche, 320.
Schrötter, 181.
Schubert, *see* Crombie.
Schubert, *see* Hönig.
Schuckler, W., 54, 785.
Schuell, *see* Schleicher.
Schuhfabrik Bonndorf. Geb. Kriechle, 366, 791.
Schuhmacher, J., and G. Stade, 870.
Schuler, *see* Abderhalden.
Schultze, E., 899, 946.
Schulz, W., *see* Schwalbe.
Schumacher, 744, 786, 812.
Schumann, 229, 231, 232.
Schunk, E., 3.
Schüpphaus, R., 104, 120, 135, 150, 151, 156, 176, 177, 178, 238, 248, 251, 252, 572, 596, 741, 776, 777, 778, 779, 786.
Schüpphaus, R., and M. White, 104, 776.
Schützenberger, 985, 1007, 1037.
Schützenberger and Naudin, 985, 1007.
Schwabacher, H., 364, 784.
Schwalbe, C. G., 6, 7, 9, 81, 117, 458, 560, 996, 1037, 1040.
Schwalbe & Schulz, W., 6.
Schwamm, 414.
Schwarr, R., 562.
Schwartz, Y., 778, 781, 789, 837, 968.
Schweizer, *see* Weidmann.
Schwob, L., and G. Dilette, 719.
Schwob, L., and G. Hébert-Dillette, 719.
Scott, *see* Arnold.
Scotellari, D., 784, 844.
Scoville, W., 816.
Scrugham, 172.
Seeley, C., 575, 773.
Seelheim, *see* Beilstein.
Seelig, E., 251.
Seher, A., 151, 777.
Seidel, H., 1071.
Seifert, R., 246.
Self-Developing Plate Co. and T. Bolas, 599, 791.
Selle, G., 788, 789, 878.
Selwig, J., 91, 779, 789, 790.
Selwig and Lange, 91, 93, 95, 102, 125, 786.
Semprun, *see* Fortun, 42.
Senderens, *see* Sabatier.
Senft, 821.
Serret, 488.
Sershall, G., 787, 879.
Sershall, G., and J. Kirk, 787, 878.
Serullas, 150.
Seymour, *see* Thornton.
Sharp, 816.
Sharp, J., and S., 423.
Shepard, E., and O. Bartlett, 789, 878.
Shepherd, S., 878.
Sherman, 816.
Shinn, 823.
Shriver, 290.
Shukoff, A., 248, 780.
Sicker, 825.
Sievers, *see* Schreiner.
Silbermann, 458, 471, 480.
Silberrad and Farmer, 50, 53.
Simmons,, W., 244.
Simpson, G., 828, 836.
Simpson, M., 184.
Sims, J., 815.
Sintzenich, E., 783.
Sisley, *see* Vignon.
Sjoberg, M., 946.
Skoglund, 120, 968.
Skraup, 25, 1037.
Skraup, Z., and H. Hamburger, 1008.
Skraup and König, 986, 990, 993.
Skraup, Z., and F. Mentor, 1008.
Skraup, Z., and F. Pregl, 986.
Smalley, W., 861.
Smart, *see* Robertson.
Smith, W., 815.
Smith, *see* Berl.
Smith, *see* Chapman.
Smith, *see* Mitchell.
Smith, A., 758.
Smith, D., 352, 699, 773.
Smith, G. H., and W. Merkens, 879.
Smith, H., 329.
Smith, J. H., 790, 842.
Smith, V., 748, 749, 773, 783.
Smith, W., 403, 699, 780.
Smith and Grasser, 642.
Smith, F. H., and Macintosh & Co., 1108.
Smith, J., H. Mitchell, W. Askham, and H. Hey, 495.
Smith and Johnston, 360.
Smith, Morrison and Schindler, 407.
Smokeless Powder Co., 906.
Smokeless Powder & Ammunition Co., 960.
Snelling, *see* Hall.
Sobrere, 899.
Sociedad Española de seda Parisien, 497.
Soc. Anon. des Celluloses Planchon, 524, 530.
Soc. anonyme d'Explosifs et de Prod. Chim., 908, 947.
Soc. Anonyme de Soie Artif. de Tubize, 490.
Soc. Anon. Fabr. de Soie Artif. de Tubize, 541.

Société Anonyme Hongroise pour la Fabrikation de la Soie de Chardonnet, 488.
Soc. Anon. Le Crinoid, 525, 540.
Soc. Anon. l'Oyonnaxienne, 761.
Soc. Anon. Nouvelle "L'Oyonnithe," 253.
Soc. Anon. pour l'Etude Ind. de la Soie Serret, 491, 498.
Soc. Anon. pour l'Etude et l'Exploit, des Proc. G. Claude, 493.
Société Anonyme pour la Fab. de la Soie de Chardonnet, 461, 494, 792.
Société bisontine de Soie Chardonnet, 564.
Soc. Boullier & Lafais, 532.
Soc. M. Bry et Cie., 844.
Soc. Civile des Pellicules Nouvelles pour Cinématographes et autre usages, 860, 862.
Société de la Soie Artificielle Valette, 565.
Société des Poudres et Dynamites, 947.
Soc. Desmaris, Morane, & M. Denis, 526.
Société de Tubize, system Chardonnet, 564.
Soc. Dynamit Akt.-Ges., 950.
Société française de la Viscose, 564, 1061, 1063, 1064, 1066, 1068, 1069, 1070, 1080, 1084, 1107.
Soc. Gen. des Films, & C. Gonon, 862.
Soc. générale de soie artificielle par le procédé Viscose, 1058.
Soc. Gen. pour la fabr. des Matières Plastique, 255.
Société hongroise de la Viscose, 564.
Soc. Hongroise Sarvar, 563.
Soc. Industrielle de Celluloid, 703.
Soc. industrielle de Cellulose, 762.
Société Italiana della Sete Artificiale, 563.
Soc. L'Air Liquide, 493.
Soc. Le Camphre, 240.
Société A. Lumière et Fils, 565.
Soc. Michelin et Cie., 891.
Soc. Petticolin, 366, 788.
Soc. pour la Fabr. en Italie de la Soie Artif. par le Procédé de Chardonnet, 494.
Soc. M. Rose & Co., *see* Bethisy.
Société russe de la Viscose, 564.
Société Weilue et Cie., 416.
Soie artificielle de Givet, 564, 565.
Soie Artificielle Izieux, 563, 565.
Soie Artificielle Paris, 563.
Soie Artificielle de Tubize, 563.
Soie de Beaulieu, 565.
Soie de Chardonnet Besançon, 563.
Soie parisienne, 565.
Soie Valleste, 565.
Sommer, F., 744.
Sommer and Friedrich, 747.
Soubeiron, 829.
Sourisseau, 819, 829.
Spamer, O., 596.
Sparre, *see* F. I. du Pont.
Sparre, F., 72, 949, 951.
Späth, C., 792.
Spellbury, *see* Martin.
Spencer, J., 733, 774.
Speyer, A., 758.
Spica, G., 976.
Spill, *see* Henly.
Spill, D., 24, 146, 257, 299, 571, 572, 573, 575, 584, 689, 773, 783.
Spill, D., & Co., 572.
Spill, H., 59.
Spiller, J., 875.
Spitteler, *see* Krische.
Spitteler, 763.
Spitzer, E., 788, 883.
Spooner, *see* Bickford.
Spooner & Pyroxylin Mfg. Co., & D. Bickford, 783.
Springer, 189.
Springer, G., 19.
Spruance, *see* Cross.
Spruance, D., 1068.
Spruijt, J., 238.
Ssobolew, 799.
Stade, *see* Schuhmacher.
Stadler, W., 759, 763.
Stahmer, R., 6.
Stains, Co., 118, 623.
Staley, 261.
Stanley, J., and T. Lemassena, 361.
Startin, J., 815, 819.
Stas, 174.
Stearn, C., 1072, 1087, 1088, 1092, 1099.
Stearn, C., and C. Topham, 1072.
Stearn, and F. Woodley, 789, 1089.
Stebbins, 288.
Steele, E., 950.
Steffens, J., 763.
Stein, 178.
Stepanow, 48, 797, 798.
Stephan, 240, 241, 779, 780.
Stephan and Hunsalz, 241, 779.
Stephan and Rehländer, 241, 780.
Stern, *see* Cross, 553.
Stern, *see* Sultan.
Stern, A., 6, 52, 986.
Stevens, *see* Hyatt.
Stevens, *see* Lefferts.
Stevens, J. H., *see* Wood.
Stevens, H. P., *see* Beadle.
Stevens, J.H., 144, 146, 155, 156, 162, 169, 170, 250, 252, 258, 298, 300, 388, 417, 577, 581, 596, 597, 626, 745, 775, 777, 778, 779, 787, 802.
Stevens, G. H., 735, 779.
Stevens, T., 428.
Stevens, W., 626, 791.
Stevens, J., and F. Axtell, 258, 778.
Stevens, J., and E. Harrison, 694, 778.
Stevens, J., and M. Lefferts, 778, 852.
Stevens and Thurber, 725, 779.
Stevens, J., and W. Wood, 421, 775, 776.
Stevens, T., 785.
Stewart, F. L., and S. E. Gill, 17.
Stewart, D., 815.
Stewart, R., 265.
Sthamer, R., 994, 999, 1038.
Stickney, *see* Randall.
Still, W., and A. Adamson, 352.
Stine, 228.
Stoak and Peck, 266.
Stobbe, H., 878.
Stockdale, *see* Marsh.
Stocker, 625.
Stocker, C., 785.
Stocker, J., and F. Lehmann, 762, 763.
Stockmeir, 315.

Stoefler, E., 735, 779.
Stoerk, J., 536.
Storm, C., 970.
Story, *see* Depont.
Story, *see* Wilson.
Story, W., 759.
Stowmarket Cordite Works, 932.
Strandfuss, K., 729.
Strasser, 808.
Strauss, J., 902, 941, 976.
Street, E., 698, 779.
Streeter, E., 798.
Streeter, L., 575, 719, 773.
Strehlenert, R., 154, 486, 536, 537, 787, 1056.
Strehlenert and Reubold, 537, 987.
Strehlenert and Westergren, 552, 1059.
Streiff, J., 801.
Streubel, 761.
Strolberger, 816.
Strolberger, H., 316.
Stüber, *see* Fendler.
Stubling, 574, 624, 666, 678, 719.
Subrenat, J., 1111.
Suchannek, 802.
Suddeutschen Jutefabrik, 1090.
Sultan, A., and I. Stern, 199.
Summers, 808.
Surinam, 177.
Sutherland, 366, 787.
Sutherland, D. and W., McLaren, 157, 787.
Süvern, *see* Saget.
Süvern, C., 44, 496, 536, 548, 557, 1087.
Süvern, K., 1081.
Süvern and Herzog, 458.
Süvern and Mach, 1081.
Swan, *see* Mawson.
Swan, J., 114, 457, 520, 787.
Swan, J., and J. Leslie, 785, 840.
Swedish Powder Manufacturing Co., 964.
Sweeny, P., 773.
Swete, O., and W. Main, 357, 785.
Swinburne, 457, 784.
Sy, A., 51, 970, 971, 973, 974, 978.
Syme, *see* Rhodes.
Szczepanik, J., 882.
Szelinski, B., 1011.

Takeuchi, M., 383.
Takeuchi, T., and R. Inoue, 197.
Talabott, *see* Dilette.
Talley, H., 781, 908, 947.
Tandler, J., 806.
Tankin, J., 782.
Tannette Manufacturing Co., 367.
Tardy, 248.
Taurke, *see* Reisenfeld.
Taylor, *see* Hollins.
Taylor, A. E., 781.
Taylor, F., 19.
Taylor, J., 73, 568, 782.
Taylor, S., 820.
Telhscher, F., 1058.
Tempers, A., 228.
Terrell, T., 789.
Teschemacher, 23, 24.
Tessen, E., 261.
Textiles Lyonnaise, 565.
Tetley, H., and J. Clayton, 531.
Thalheimer, A., 580.
Therye, *see* Oblasser.
Thibault, 825.
Thiébault, A., 784.
Thiele, E., 511, 512, 513, 1033, 1058.
Thiele and R. Linkmeyer, 513.
Thiem, J., and W., 763.
Thieme, 57, 251, 778, 780, 787.
Thiry, L., 401.
Thistlewaite, W., 571.
Thomas, *see* Olivier.
Thomas, 976.
Thomas, F., 765.
Thomas, J., 53.
Thomas, M., 810.
Thomas, S., 121.
Thomas and Bonavita, 1099.
Thomas, E., J. Bonavita, and M. Olivier, 267, 1069, 1103.
Thomas and Provost, 10, 1099.
Thompson, *see* du Pont.
Thompson, 422, 789, 816, 823.
Thompson, F., 781, 849, 863.
Thompson, G., 446.
Thompson, J., 943.
Thompson, W., 323, 415, 787.
Thomson, *see* Nathan.
Thomson, 929.
Thomson, J., and W., 96, 789.
Thornton, J., 779, 858.
Thornton and Rothwell, 858.
Thornton, J., and C. Seymour, 756.
Thorpe, 184.
Thurber, *see* Harrison.
Thurber, *see* Stevens.
Thurber, C., 644, 659, 778, 779.
Thurber, C., and C. Schaefer, 727.
Thurlow, N., 247, 779, 780, 791.
Thurston, C., 799.
Tice, W., 361.
Tichborne, 823.
Tilden, *see* Armstrong.
Tiller, 312.
Tiller, F., O. Benzinger, and R. Meyer, 312.
Timpe, H., 519.
Tirelli, *see* Morpurgo.
Tischtschenko, 183.
Tissier, *see* Behal.
Tissier, 187.
Tissier and Magnier, 763.
Todd, E., 156, 227, 317, 776, 777, 785, 840.
Todd, *see* Van Winkle.
Todtenhaupt, F., 518, 1064.
Tolhurst Machine Works, 126.
Tollens, *see* Faber.
Tollens, *see* Moschatos.
Tollens, *see* Murumow.
Tolputt, *see* Pontin.
Tomlinson, *see* Job.
Tonite Powder Co., 961.
Tonkin, J., 123.
Topham, *see* Stearn.
Topham, C., 1072.
Torei, G., 366.
Torii, S., 553.
Tortelli, M., 621, 790.
Towndrow, 737.
Townend, W., 478.
Townsend, C., and A. Rollason, 783.
Tractta-Mosca, *see* Paterno.
Transparent Cellulose Products Co., 322.
Traquair, *see* Cross.
Traquair, 1009.
Traube, 183, 184, 185, 227, 229, 232.
Traube and Bodlander, 206.
Trauzl, 945.
Travis, W., 362.
Trench, 961, 962.
Trench, Faure and Mackie, 961.
Trested, *see* Kendall.

Tribouillet, V., and A. de Besancle, 107, 622, 774.
Trimble, H., 215.
Troquenet, C., 626, 629, 790.
Tromsdorff, 183.
Trotman, 425.
Trowbridge, 44.
Truehot, 458.
Tscheuscher, 303.
Tubby, 796.
Tuebben, *see* Friedländer.
Tuebber, *see* Friendländer.
Turgard, 469, 622, 777.
Turin, M., 574.
Turk, H., 518, 778.
Turnhout, *see* Leemans.
Turpin, M., 962, 967.
Tuteur, E., and W. Goulbourne, 360.
Tyler, F., 13.
Tyrer, C., 130.
Tyrer, T., 822.

Udransky, L., 211.
Ujhely, *see* Field.
Ulex, G., 200.
Ullstein, F., 419, 784.
Ulrich, *see* Ley.
Ulrich, M., 328.
Ulzer, 997.
United Artificial Silk Co., 883.
United Fast Color Eyelet Co., 735, 789.
Urban, *see* Fremery.
Urbain, *see* Verley.
Utz, 768, 769.

Vajdafy, A., 496.
Valentà, *see* Eder.
Valenta, 304, 1003.
Valenta, A., 833.
Valenta, E., 885, 897.
Valette, R., 488, 491, 790.
Vallee, *see* Helbronner.
Van Geison, 803.
Van Gelder, 70.
Van Tieghem, 190.
Van Winkle, A., 301.
Van Winkle and Todd, 414, 786.
Veley, V., 172.
Vellumoid Paper Co., 419.
Velvril Co., 412, 789.
Vendar, V., 157.
Vender, V., 137, 781, 958.
Verbiese, *see* Bouret.
Vereinigte Glanzstoff-Fabriken, 497, 503, 562, 564, 565, 792.
Verein, Glanstoff Fab. Akt.-Ges., 524, 1005.
Vereinigte Kunstseide Fab. Akt.-Ges. Kelsterbach, 522, 680, 791, 881, 1062, 1068, 1069.
Vereinigte Kunstseidenfabriken Frankfurt, 485 526, 562, 564.
Verley, 248.
Verley, A., E. Urbain, and A. Feige, 243, 780, 790.
Vermeeseh, J., 499.
Verny, *see* du Boistesselin.
Verona Chem. Co., *see* Waek.
Vezes, M., 273.
Viallanes, 800.
Vieille, 25, 26, 28, 31, 900, 962.
Vieweg, *see* Wiscelhaus.
Vieweg, 7.
Vieweg, W., 1058.
Vignes, *see* Lagneau.
Vignon, L., 2, 30, 32, 45, 51, 62, 487, 1044, 1058, 1077.
Vignon, L., and L. Cassella, 18.
Vignon and Gérin, 57, 1003.
Vignon and Sisley, 60.
Villedieu, *see* Bittner.
Vineent, 810.
Virchow, 1.
Viseose Syndicate, Ltd., and C. Cross, 1070.
Vittenet, H., 484, 780, 790.
Vogel, E., 788, 837.
Vogel and Cadoret, 485.
Voight, 574, 755, 789.
Voigt, A., 116, 780.
Volkmann, F., 899.
Volkmer, 747.
Vollenbruch, 837.
Volney, 780.
Vossen, L., 1066.
Vulcan Copper Works, 202, 222.

Wachendorff, 339.
Wack, A., 241, 780.
Waek, A., and Verona Chem. Co., 243.
Waddell, *see* Gentieu.
Waddell, M., 532, 1070, 1081, 1083.
Waddell, R., 911.
Wadsworth, G., 781, 943, 957.
Wagner, 245, 277, 1023.
Wagner and Prickner, 245.
Wagner and Saytzeff, 187, 213.
Wahl, 574.
Waite, C., 1063, 1064, 1065, 1066, 1090, 1093.
Walbaum, *see* Bertram.
Walden, W., 402, 779.
Walker, *see* Mork.
Walker, G., 156, 778.
Walker, H., 781.
Walker, W., 19, 861, 987, 994, 1013.
Wall, R., 784.
Wallach, O., 240, 246, 334.
Wallner, J., 394.
Walton, F., 364, 783.
Ward, J., 642, 777.
Warlish, F., 786.
Warren, H., 30.
Waterbury Farrel Foundry & Machine Co., 912, 914.
Watt, 425.
Wayne, *see* Dietz.
Weber, *see* Cross.
Weber, 46, 119.
Weber, C., *see* Frankenburg.
Weber, C., 986, 1002, 1003, 1109.
Weber, C., and A. Cairns, 1108.
Weber, C., and C. Cross, 987, 1001.
Weber, Cross and Frankenburg, 1001.
Webster, 3.
Wederhake, 458.
Weeber, R., 361.
Wegelin & Hübner, 279.
Weichardt, W., 197.
Weidmann and Schweizer, 228.
Weigert, 803, 807.
Weiler ter Meer, 256.
Weingartshofer, 829.
Weintraub, *see* Lunge.
Weizmann, *see* Friedl.
Weizmann, C., 241, 242, 246, 247, 780, 790, 791.
Weizmann, C., & Clayton Aniline Co., 791.
Welling, W., 682.
Wellington, J., 787, 837.
Welwart, 335.
Wend, G., 240.
Werner, F., 421, 423, 786.
Wessel, H., 950.
Westergren, *see* Strehlenert.
Westergren, J., 1059.
Westfalisch-Anhalische Sprengstoffe A–G, 947.
Westhoff, *see* Ost.

Weston, 457, 520, 622, 775, 784.
Wetherill, 176, 177.
Wetter, 72.
Weygang, C., 361.
Whitcomb, *see* White.
White, *see* Schüpphaus.
White, L., and K. Whitcomb, 775.
Whitefield, L., 428, 785.
Whitehouse, 574.
Whitfield, G., 791, 881.
Whitney and Ober, 3.
Wiebelitz, H., 821.
Wiederhold, O., 356, 780.
Wilcox, F., 941.
Wiley, H., 944.
Wilison, E., 815.
Wilkening, L., *see* Ost.
Wilkinson, E., 549.
Will, W., 46, 53, 71, 753, 974.
Will and P. Lenze, 58.
Willcox, 50.
Williams, *see* Parkin.
Williams, 414.
Williams, Dr. Edward D., 305, 840.
Williams, E., and M., and O. C. Moy, 786.
Williams, J., 785.
Williams, M., *see* Williams, W.
Williams, W., 228, 957.
Williams, W. J., 925.
Williams, W., and M. and C. May, 308.
Williamson, R., 803.
Willock, G., 262.
Wilson, *see* Courtauld.
Wilson, *see* Greenish.
Wilson, 216, 266, 270, 300, 344, 799.
Wilson, A., 782.
Wilson, L., 791.
Wilson, W., 418, 775, 784.
Wilson and Story, 365, 784.
Winderling, 669.
Windisch, K., 179, 192.
Winkler, Crompton and Howell, 574.
Winogradoff, 187.
Winsborough, R. H., 773.
Winterbottom, G., and Egerton, J., 1106.
Wintersteiner, 808.
Wirth, 76.
Wiscelhaus and Vieweg, 1058.
Wise, W., 418.
Wisser, Lieut., 962.
Witt, 458.
Witt, O., 882, 1056.
Witt, O., and A. Buntrock, 1109.
Wittowsky, C., 395, 785.
Wittstein, 188.
Witz, G., 81.
Witz, M., 8.
Witz and Osmond, 8.
Wohl, 758, 999, 1037.
Wolf, G., 446.
Wolff, J., 1109.
Wolff & Co., 963.
Wolff and Foerster, 168, 900.
Wolffenstein, *see* Bumeke.
Wolffenstein, R., 410.
Wolfram, 40.
Wolfshohl, H., 94, 790.
Wolter, L., 764.
Woltereck, C., 1084.
Woltereck, H., 487.
Wood, *see* Hyatt.
Wood, *see* Stevens.
Wood, G., 785, 844.
Wood, W. H., 778.
Wood, W., and G. Gillmore, 679, 777.
Wood and Stevens, 370.
Woodbridge, R., 1004, 1006.
Woodley, *see* Stearn.
Woodman, D., 489.
Woodward, G., 627, 780, 789.
Woodworth, 799.
Wordle, 458.
Worthley, A. J., 783, 829.
Wotherspoon, W., 1008.
Wright, C., 503.
Wurtz, 174, 176, 185, 213.
Wyman, A., 675.
Wyman & Sons, 979.
Wynne, F., and L. Powell, 457, 784.
Wyschnegradsky, 178, 187.
Wyss, H., 461.
Wyss-Naef, 44.
von Wyss, H., H. Herzfeld, and O. Rewidzoff, 212,

Zand, 327.
Zander, 183.
Zanschirm, H., 767.
Zeidler, H., 784.
Zeise, 1059.
Zeitler, 678.
Zeitschel, O., 246.
Zeller, G., 153, 777, 778.
Zellstoff Fabrik, Waldhof, 786.
Zimmerman, *see* Hagemann.
Zingler, M., 207, 364, 784,
Zühl, E., 253, 254, 255, 626, 779, 788, 789, 1010.
Zühl & Eisemann, 253, 254, 255, 1010.
Zulkowsky, 1008.
Zwick, H., 318, 1028.

SUBJECT INDEX

" A " sensitzer, 878.
" A " turpentine, 272.
Abel heat test, 969, 979.
— significance of, 979.
Abel's method, nitrating by, 73.
Acacia, 260.
Accumulator, Ribbe, mfr. of, 574.
Acetal, 149, 150, 153, 485.
Acetaldehyde, 537, 571.
Acetamide, 193, 987, 1015.
Acetanilide, 56, 193, 250, 987, 1013.
Acetate bronzing liquids, 1028.
Acetate lacquers, 1027.
—, acetylene tetrachloride, 1028.
—, chloroform, 1028.
Acetate of lime, brown, 217.
—, gray, 217.
Acetates, mixed, 304.
Acetate silk, 1032.
—, refractivity of, 1035.
—, strength of, 1035.
Acetate wire, 1029
—, estimation of, 1031.
Acetbenzenesulfoamid, 256.
Acetdichlorhydrin, 151, 253.
Acetic acid, 53, 157, 260, 269, 449.
— (glacial), 167.
Acetic anhydride, recovery of, 1002.
Acetic collodion, 358.
Acetic ether, *see* ethyl acetate.
—, denaturant in mfr. of, 1141.
Acetin, 1034.
Acetoacetic ether, *see* ethyl acetoacetate.
Acetochlorhydrose, 256.
Acetoluide, 56, 252.
Acetone, 125, 145, 149, 166, 902.
Acetone Dauer yeast fermentation, 193.
Acetone, English requirements for, 41.
—, flash point of, 1144.
—, manufacture of, 152.
Acetone, recovery of, 923.
—, solubility celluloid in, 755.
Acetone oils, 152, 303.
Acetone oils, purification of, 152.
Aceto-nitrates, 117.
Acetonyl-glycerol, 244.
Acetochlorhydrin, 256, 1022.
Acetonitrate plastics, 1012.
Acetophenon, 252, 1015.
Acetphenetidines, 252.
Acet-*p*-phenetidin, 252.
Acet-*p*-toluenesulfamid, 256.
Acetylated castor oil, softener, 1033.
Acetylated diglycose, 986.
Acetylated oxycellulose, 990.
Acetylbenzyl-*o*-toluidine, 1034.
Acetylcellobiose, 990.
Acetylcellulose, *see* cellulose acetate.
Acetyl chloride, mfr. of, 989.
Acetyl diamine, 250.
Acetyldiphenylamine, 249.
Acetylene blue 6B, 548.
Acetylene blue 3R, 548.
Acetylene pure blue, 548.
Acetylene sky blue, 548.
Acetylene tetrabromide, 172.
Acetylene tetrachloride, 171, 852, 987, 1005, 1014, 1015, 1027.
Acetylhydrocellulose, *see* hydrocellulose acetate, 256, 1018.
Acetylphenylnaphthylamine, 249.
Acetylidine tetrachloride, 171.
Acetylphenyltolylamine, 249.
p-Acetxylid, 258.
Acetyloxycellulose, 256.
Acetyl-*p*-oxyphenylurethanes, 207.
Acetylparacthoxyphenyl urethane, 259.
Acetylparaoxyphenyl urethane, 259.
Acetyl salicylic acid, 207.
Acetyltolylxylylamine, 249.
Acetyltrichloranilide, 252.
Acetyltrichlornitranilide, 252.
Acetyltrichlor-*o*-phenylenediamine, 252.
Acetyltriethyl citric ether, 259.
Acid (nitrating), aeration of, 134.
—, calculation, Redpath method, 138.
—, clarification, 132.
—, composition, calculation of, 138.
—, denitrating, 137.
—, fortification of, 132.
Acid (nitrating), mixed, denitration, 137.
—, mixing, 135.
—, —, du Pont apparatus for, 135.
—, mixing scales, 135.

Acid, nitrogen oxides, removal from, 134.
—, recovery of, 132.
—, waste, renewing electrolytically, 137.
—, weakening of, 134.
Acid (nitration), concentration by electricity, 117.
Acid brown, 451.
Acid cellulose, 485, 770, 990.
Acid, determination of, 70.
Acid green, 451.
—, D, 732.
Acidity, determination in cellulose nitrate, 972.
Acid-moistened collodion, 49.
Acid rosamine, 547.
Acid violet, 451, 547.
—, 3BN, 548.
—, 4BN, 548.
—, 7B, 548.
Acid yellow G, 732.
Acidia, tunicin in, 1.
Acids, protecting cloth against, 72.
Acme paint remover, 264.
Aconital collodion, 823.
Acridine, 832.
Acridine chloride, 193.
Acridine yellow, 451.
Actinoid polyps, 690.
Ad-el-ite, 264.
Adhesives, celluloid, 736.
Adhesive cotton, 37.
Adipocelluloses, 4.
Æsculin, 877.
Agar-agar, 268.
Agave flower stems, nitration of, 61.
Agave plant, nitration of, 60.
Agricultural implements, coating, 344.
Alabaster, imitation, 693.
d-Alanine, 196.
Albaline, 880.
Album, covers, making, 420.
Albumen, 19, 479.
Alcohol, *see* ethyl alcohol.
—, defuselation of, 177.
Alcohol dehydration, 903.
Alcohol, denatured, flash point of, 1144.
—, detection benzene in, 169.
—, distillation of, 922.
Alcohol from wood, 18.
Alcohol, gauging, 1138.
—, purity of, 42.
—, recovered, gauging, 1135.
—, recovery of, 1133.
—, —, apparatus for, 781.
—, rectification of, 906.
—, redenaturing, 1138.
—, restoring, 1133, 1138.
—, solid, 1035.
—, solubility of camphor in, 236.
—, solubility of halides in, 154.
Alcyonium corals, 690.
Alcyonoid polyps, 690.
Aldehydes, 758.
Aldesters, 153.
Aldoses, 58.
Aleppo pine, 238.
Algae, action of, in decomposing cellulose nitrates, 52.
Alizarin assistant, 368.
Alkali-cellulose, 10, 1055, 1057.
—, storing, 1077.
Alkali cellulose xanthic acid, 1060.
Alkalinity, determination in cellulose nitrate, 972.
Alkaloids, denaturant in mfr. of, 1141.
Alkannet, 824.
Alkylamine, as cellulose solvent, 515.
Alkyl carbamates, 259.
Alkyl citrates, 259.
Alkylnaphthylamines, 252.
Allantoin, 824.
Alligator hide, imitating, 395.
Alloxan, 824.
Allyl acetate, 182.
Allyl alcohol, 182, 263, 265.
Allyl cinnamate, 399.
Allyl malonate, 399.
Alum-hæmatoxylin, 803.
Aluminum, 950.
Aluminum bisulphite, 1069.
Aluminum bromide, 625.
Aluminum chloride, 487, 625.
Aluminum, fineness, determination of, 316.
Aluminum formate, 246.
Aluminum hydroxide, 339.
Aluminum iodide, 625.
Aluminum, manufacture of, 315.
Aluminum mordants, 11.
Aluminum oleate, 263, 756.
Aluminum paint, 308.
—, flash point of, 1144.
Aluminum palmitate, 263.
Aluminum, powdering, 315.
Aluminum ricinoleate, 629.
Aluminum resinate, 264, 756.
Aluminum ricinates, 629.
Aluminum silicate, 339.
Aluminum stearate, 756.
Aluminum sulphate, 629, 761, 1068, 1089.
Amanita phalloides, 814.
Amber, 334.
Amber, imitation, 691.
—, —, bars of, 638.
—, —, rods of, 638.
—, mottled, imitation, 691.
Amberite, 959.
American cottons, 10.
Amidase, 197, 231.
Amide powder, 899.
a-Amido-*n*-butyric acid, 194.
Amidocelluloses, 9, 626.
a-Amido-*iso*valeric acid, 194.
p-Amidophenetol, 252.
Amidosulfbenzoic acids, 256.

Amino-nitrocellulose, 489.
Aminophenol, 1014.
l-α-Aminophenylacetic acid, 196.
Ammonia, neutralizant in nitration, 119.
Ammoniac, 334.
Ammoniacal copper oxide, stability, increasing, 510.
Ammonium acetate, 265, 993.
Ammonium arsenate, 56.
Ammonium bromide, 625.
Ammonium carbamate, 120.
Ammonium carbonate, 56.
Ammonium caseinate, 268.
Ammonium chloride, 625, 674.
Ammonium chromate, 56.
Ammonium citrate, 56.
Ammonium iodide, 625.
Ammonium iodide as denaturant, 1129.
Ammonium nitrate, 899, 994.
—, as denitrifier, 488.
Ammonium orthophosphate, 56.
Ammonium oxalate, 120.
Ammonium palmitate, 56.
Ammonium perchlorate as stabilizer, 510.
Ammonium permanganate stabilizer, 510.
Ammonium phosphate, 623, 674.
Ammonium picrate, 877, 936, 967.
Ammonium pyrotartrate, 56.
Ammonium succinate, 599.
Ammonium sulphate, 191, 507, 1050, 1063.
Ammonium sulphide, 487.
—, as denitrifier, 487, 490.
Ammonium sulphocyanide, 628.
Ammonium tartrate, 56, 968.
Ammonium viscose, 1077, 1100.
" Amorphous cellulose," 718.
Amphibians, tunicin in, 1.
Amylacetanilide, 252.
Amyl acetate, 147, 213, 527.
n-Amyl acetate, 213.
ter-Amyl acetate, 213.
Amyl acetate, bottoms, roads made from, 220.
—, cleaning brushes with, 228.
—, determination of, 358.
—, duty on, 228.
—, examination of, 233.
—, flash point of, 1144.
—, " high boiling," 204.
Amyl acetate lacquers, 300.
Amyl acetate lamp, 214, 228.
Amyl acetate manufacture, acetic acid recovery, 223.
—, aqueous distillate, 220.
—, bottoms, 220.
—, cold process, 214.
—, charging the still, 215.
—, first fraction, 219.
—, milky fraction, 224.
—, oily distillate, 223.
Amyl acetate manufacture, scheme of, 225.
—, second fraction, 220.
Amyl acetate, moisture in, 224.
—, preparation of in laboratory, 213.
—, properties, 227.
—, qualities of, 213.
—, quantitative determination, 233.
—, redistillation of, 224.
—, tests for, 233.
—, uses, 227.
—, yields in manufacture of, 224.
Amyl acetoacetate, 153, 304.
Amyl alcohol, see also fusel oil.
Amyl alcohols, 186.
n-Amyl alcohol, 186.
Amyl alcohol, acidity in, 212.
—, amyl esters in, 211.
—, benzine in, 211.
—, cobalt reaction with, 207.
—, commercial uses, 207.
—, constants of, 187.
—, determination of, 189.
—, detection of, 187.
—, formation from *iso*leucine, 193.
—, increasing dynamic energy of, 207.
—, isomeric forms of, 175.
—, origin of name, 174.
—, rotation of, 175.
—, solubility in, ethyl alcohol, 188.
—, —, water, 188.
—, tests of purity, 211.
Amyl angelate, 149.
Amyl benzoate, 147.
Amyl butyrate, 147, 227, 265.
Amyl caprate, 176.
Amyl carbamate, 259.
Amyl carbanilate, 259.
Amyl carbonate, 155.
Amyl chloracetates, 150.
Amyl chloral, 150.
Amyl chloride, 150, 848.
Amyl dichloracetate, 150.
Amyl diphenylamine, 207.
Amyl esters, solubility of, in water, 227.
Amyl ether, *see* Amyl oxide.
Amyl formate, 147, 155, 232, 370.
—, textile finish with, 233.
Amyl iodide, 207.
Amyl ketone, *see* di-*n*-amyl ketone.
Amyl monochloracetate, 150.
Amyl naphthoxylacetate, 255.
Amyl nitrate, 149, 150, 207.
Amyl nitrite, 149, 150.
Amyl nitrophthalate, 175.
Amyl oxide, 148.
Amyl phthalate, 256.
Amyl propionate, 227.
Amyl silicate, 307, 491.
Amyl succinate, 256.
Amyl-sulphuric acid, 216.
Amyl tiglate, 149.
Amyl trichloracetate, 150.

Amyl valerate, 147, 148, 265,.
Amyl valerianate, *see* amyl valerate.
Amylene oxide, 152.
Amylene hydrate, 187.
Amylic ferment, 190.
Amylic oxide, 150.
Amylic vibrio, 191.
Amylidendiethyl ether, 150, 255.
Amylidendimethyl ether, 150, 249, 255.
Amylobacter, 190.
Amylobacter butyricus, 197.
Amyloid, 8.
Anarthritic collodion, 823.
Angelic acid, 1007.
Anhydroformaldehydeaniline, 1012.
Aniline, 145, 240, 263, 464, 597, 747, 802, 1015.
Aniline black, 524, 1024.
Aniline chloride, 1063.
Aniline oil, 803.
Aniline oxalate, 56.
Aniline sulphate, 1007.
Animal celluloses, *see* Celluloses, animal.
Animal silk, 516.
Animé, 339, 429.
Annatto, 329.
Antacids, 596.
—, for cellulose nitrate, 595.
Antacid, urea as, 596.
Antephelidicum collodion, 823.
Anthemol, 149.
Anthracene dyestuffs, 1024.
Anthraquinone, 150.
Antifouling composition, 208, 327.
Antifouling paint, 327.
Antimonous salts as denitrifiers, 488.
Antimony pentasulphide, 369, 431.
Antimony tannate, 9.
Antipathes coral, 691.
Antipyrin, *see* dimethylphenylpyrazolon.
Antipyrin salicylate, 258.
Antique leather, 396.
Antique ware, lacquering, 345.
Antiseptics, 327.
Antiseptic collodion, 819.
Apex paint remover, 264.
Apiol, 235.
Apocynaceæ family, 17.
Apple, pectocellulose in, 4.
Aragonite, 694.
Archer's collodion process, 828.
Archerotype process, 828.
Archil, 121, 331.
Argentine, 308.
Aristol, 388.
Arlington paste, 38, 704.
Armenian paper, 322.
Armure textile, 1087.
Army Powder Factory (U. S.), 937.
Army rifle powder, .30-cal. U. S., 953.
Arsenous oxide, 453.
Artificial arrack essence, 147.
Artificial bristles, 525.
Artificial brocade, 421.
Artificial camel's hair, 404.
Artificial chamois, 401.
Artificial coral, 690.
—, producing, 352.
Artificial cork, 406.
Artificial feathers, 410.
Artificial fibers, 521.
—, dyeing, 543.
Artificial filaments, 454.
—, acidity in, 488.
—, alkaline copper on, 558.
—, ammoniacal nickel on, 558.
—, ash, 559.
—, bleaching of, 491, 545.
—, breaking stresses of, 552.
—, brilliancy of, 556.
—, brucine on, 558.
—, cellulose acetate, 1032.
—, Chardonnet, 543.
—, chemical properties of, 557.
—, chromic acid on, 558.
—, covering power of, 556.
—, Crespin, 480.
—, cuprammonium, 497.
—, cuprammonium on, 558.
—, defects of, 556.
—, denitration of, 487.
—, determination presence of, 560.
—, diazotized colors on, 548.
—, diphenylamine on, 558.
—, diphenylamine test, 556.
—, distinguishing between, 560.
—, durability of, 552.
—, Du Vivier, 479.
—, dye absorption of, 543.
—, dyed, variation in shade, 544.
—, dyeing by machinery, 546.
—, dyeing, fastness, 545.
—, —, sulphide colors, 545.
—, elasticity of, 552.
—, elongation of, 555.
—, Fehling's solution on, 558.
—, fiber elongation of, 552.
—, finishing, 485.
—, formation electrically, 539.
—, Glanzstoff, 543.
—, hardening, 526, 528.
—, heating to 200°, 559.
—, high gloss on, 526.
—, hygroscopicity, 559.
—, increasing brilliancy, 532.
—, iodine on, 558.
—, Lehner's process, 471.
—, luster of, 547.
—, manufacture in Italy, 565.
—, microscopical differences, 550.
—, Millon's reagent on, 558.
—, moisture in, 546, 555, 559.
—, nitric acid on, 558.
—, nitrogen in, 560.
—, Pauly silk, 544.
—, polarization of, 551.

Artificial filaments, polarized light, action of, on, 551.
—, potassium hydroxide on, 557.
—, production of, 562.
—, properties of, 549.
—, properties of Lehner, 478.
—, reactions of, 549.
—, rendering uniform, 531.
—, rigidity, increasing, 1023.
—, softening, 491.
—, solvent recovery, 492.
—, specific gravity of, 556.
—, spinning, 526, 781.
—, strengthening, 538.
—, tenacity, 552, 556.
—, tensile strength of, 552.
—, testing, 557.
—, Thiele apparatus, 511.
—, uses in lace manufacture, 561.
—, uniformity, increasing, 529.
—, uses of, 561.
—, viscose, 1077.
—, world's output of, 562.
—, zinc chloride on, 557.
Artificial foil, 524.
Artificial fruit flavors, 147.
Artificial fur tails, 409.
Artificial gorse, 521.
Artificial hair, 521.
—, human, 524.
Artificial hemp, 521.
—, producing, 1084.
Artificial horn, 687, 763.
—, Harvey process, 687.
Artificial horsehair, cuprammonium cellulose for, 507.
—, dyeing, 549.
Artificial horsehair from grasses, 8.
Artificial jet, lacquers for, 344.
Artificial lace, 524.
Artificial lace fabric, 423.
Artificial leather, 360.
—, antique, 396.
—, bronzing, 396.
—, calendering, 390.
Artificial leather cements, 423.
Artificial leather, cheapening, 399.
—, classes of, 388.
—, cloth, cleaning of, 375.
—, —, coating of, 378.
—, —, drying, 371.
—, —, inspecting for, 375.
—, —, measuring, 374.
—, —, stitching of, 377.
—, compositions for, 385.
—, deodorizing, 398.
—, embossing, 390.
—, Field's formula for, 368.
—, hand-decorated, 394.
—, insecticides for, 399.
—, iridescent, 389.
—, Kennedy's formula for, 369.
—, matte, producing, 389.
Artificial leather, mission, 389, 396.
—, pin holes in, 379.
—, preservatives for, 399.
—, production of, 399.
—, rosin in, 389.
—, " sheen " effects on, 396.
—, " shimmer " effects on, 396.
—, smootching, 395.
—, solvent, recovery of, 387.
—, spangled, 389.
—, Spanish, 396.
—, uninflammable, 397.
—, varnishing, 393.
—, viscose for, 1109.
—, viscose in, 1103.
Artificial lint, 521.
Artificial patent leather, 404.
—, uses, 405.
Artificial raspberry, 147.
Artificial ribbons, dyeing, 549.
Artificial rum essence, 147.
Artificial sealskins, 409.
Artificial silk, *see* artificial filaments.
—, 458.
—, finishing, 792.
Artificial silk hats, 549.
Artificial silk, Lehner process, 472.
—, spinning, 792.
Artificial sole leather, 401.
Artificial strawberry, 147.
Artificial tissues, 459.
Artificial tubes, dyeing, 549.
Artificial velvet, 422.
Artificial whalebone, 521.
Artiseta, 501.
Asbestos-Bakelite, 760.
Asbestos fiber, 454.
Asbestos flour, 629.
Asbestos, spinning, 536.
Asclepediadeæ family, 17.
Asclepias silk, *see* Silk asclepias.
Ash, determination in cellulose nitrate, 972.
Ash trays, celluloid, 728.
Askau prints, 880.
Asparagine, 193.
Aspartic acid, 197.
Asphalt, 344.
Aspergillus niger, 52.
Asphalt celloidin injection, 809.
Astringent collodion, 820.
Atlas orange, 451.
Auramine, 329, 330, 343, 396, 451, 1025.
—, II, 548.
—, G, 548.
—, O, 548.
Auramine collodion, 878.
Aurantia, 330.
Aurantia collodion, 878.
Aurine, 330, 343, 396.
Aurophenine O, 549.
Aurum, 308.

Austrian blasting gelatin, composition, 946.
Austrian powder, 901.
Awnings, viscose coated, 1105.
Axite, 937.
Azo blue, 330.
Azo yellow, 451.
— I, 548.
— O, 548.

B Powder, 900, 901, 962.
B. N. Powder, 900, 962.
Bacillus amylobacter, 197.
Bacillus butylicus, 182, 190.
Bacillus mesentericus vulgatus, 191.
Bacillus orthobutyricus, 190.
Bakelite, 335, 758.
Balances, lacquering, 329.
Balls, *see* golf, billiard, ping-pong.
Ballistic cotton, 37.
Ballistite, 621, 900, 926, 928.
—, microscopic structure of, 927.
Ballistite shotgun powder, 952.
Ballistite smokeless shotgun powder, 955.
Ballistite testing, 981.
Balloons, celluloid sheets for, 676.
—, collodion in manufacture of, 890.
—, lacquer for covering, 297.
Ball's paint remover, 264.
Balsam of fir, 309.
Balsam Peru, 147, 251, 819.
Balsam tolu, 147, 251, 317.
Balsams, 305.
Banana liquid, 308.
Banana oil, 225, 308.
Banana essence, 227.
Banknotes, pegamoiding, 751.
Barium acetate, 265.
Barium amyl sulphate, 175.
Barium butyrate, 598.
Barium caprylate, 321.
Barium lactate, 598.
Barium naphtholate, 241.
Barium nitrate, in powders, 961.
Barium perborate, 152.
Barium peroxide, 152.
Barium phenolsulphonate, 1048, 1049.
Barium phosphate, 628.
Barium resinate, 263.
Barium sulphate, 485.
Barium sulphide, 690.
Barium tartrate, 901, 936.
Barium valerates, 175.
Barometer manufacture, denaturant in, 1127
Baryta paper, Webb's matte, 893.
Bating, 427.
Bavarian blue, 451.
Bayberry tallow, 265.
Bearskin, imitating, 409.
Beating pyroxylin, 585.
Beaver fur, imitating, 408.
Bedstead lacquers, 338.
Beadsteads (metallic), coating, 332.
Beer yeast, 177.
Beet, pectocellulose in, 4.
Belladonna plaster (fluid), 823.
Bellenite powder, 960.
Belt cement, 424.
Belting, viscose coated, 1105.
Benzal alcohol, 263.
Benzaldedyde, 253, 537.
Benzamide, 56.
Benzanilid, 154.
Benzene bromides, 259.
Benzene chlorides, 259.
Benzene, flash point of, 1144.
Benzene nitrobromides, 259.
Benzene nitrochlorides, 259.
Benzene sulphamide, 241.
Benzenesulfanilid, 256.
Benzenesulfoacidphenyl ether, 256.
Benzenesulfo-*p*-chloranilid, 256.
Benzenesulfo-*p*-cresol, 256.
Benzenesulfodiphenylamin, 256.
Benzenesulfoethylamid, 256.
Benzenesulfoethylanilid, 256.
Benzenesulpho-methylanilid, 256.
Benzenesulphonic acid, 1033.
Benzenesulfo-β-naphthol, 256.
Benzenesulfo-*o*-phenetidin, 256.
Benzenesulfo-*p*-phenetidin, 256.
Benzenesulfo-*o*-toluid, 256.
Benzenesulphamid, 256.
Benzenesulpho-α-naphthylamin, 256.
Benzenesulpho-β-naphthylamin, 256.
Benzenyltrichloramidine, 255.
Benzicin, 256.
Benzidine, 308.
Benzidine chloride, 1063.
Benzil, 252.
Benzine 62° Bé, 169.
Benzine 71° Bé, 169.
Benzine, 272, 307.
—, denaturant, 1114.
—, determining in lacquers, 359.
—, flash point of, 1144.
—, manufacture, etc., 169.
—, non-inflammable, 169.
—, tests for purity, 1116.
Benzo brilliant blue 6B, 548.
Benzochlorhydrin, 151.
Benzodiacetin, 151.
Benzo fast red, 548.
Benzo fast scarlet, 371.
—, 4BS, 548.
—, 8BS, 548.
—, GS, 548.
Benzo green, 371, 548.
Benzoic acid, 682, 764.
Benzoic anhydride, 258.
Benzoic ether, *see* ethyl benzoate.
Benzoin, 252, 305, 334.
Benzol, 263.
Benzol as denaturant, 1127.

Benzol, flash point of, 1144.
Benzolsulphonic acid, 998, 999.
Benzomonoacetin, 151.
Benzonaphthol, 258.
Benzophenon, 252.
Benzopurpurine, 371.
Benzoyl alcohol, 263.
Benzoyl aniline, 154.
Benzoyl diamine, 250.
Benzoylguaiacol, 258.
Benzoylbenzenesulfamid, 256.
Benzoyltoluenesulfamid, 256.
Benzyl acetate, 173, 251, 399.
Benzylacetpentachloranilide, 252.
s-Benzylacetyltetrachloranilide, 255.
Benzyl alcohol, 148, 263.
Benzylaminobenzyl alcohol, 251.
Benzyl benzoate, 147, 148, 251.
Benzylbenzoyltetrachloranilide, 255.
Benzyl carbamate, 259.
Benzyl cinnamate, 148, 251.
Benzyldihdrocarvone, 1011.
Benzylethenyltetrachloramidin, 250.
Benzylethenyltrichloramidine, 255.
Benzylethyl alcohol, 196.
Benzylethyl ether, 251.
Benzylidene acetone, 252.
Benzylidene diacetate, 255.
Benzylidene diacetic ester, 254.
Benzylidene diacetoacetate, 255.
Benzylidene-glycerol, 244.
Benzylidene monoacetoacetate, 255.
Benzylmethyl ether, 251.
Benzylnaphthalins, 255.
Benzyl nitrochlorides, 259.
Benzyl oxanilate, 254.
Benzyltrichloramidin, 250.
Bergamot pear odor, 188.
Bergmann and Junk test, 969, 973.
Berlin blue, 330.
Bernadou powder, 941.
Berry's Best paint remover, 226.
Besançon silk, 460.
Betol, 258.
Bichromate silk, 518.
Bichrone, 444.
Bicycle frames, celluloid coverings for, 647.
Biebrich scarlet, 330.
Billiard balls, celluloid, 726.
—, coating, 578.
—, imitation ivory, 682.
—, lacquering, 350.
—, rotundity, test for, 727.
Binitrobenzene, 154.
Biology, cellulose nitrate in, 793.
Bioses, 25, 990.
—, nitric esters of, 58.
Biose octanitrates, 58.
Bisaccharides, 58.
Bismarck brown, 330, 396, 451, 1024.
—, GR, 548.
Bismuth chloride, 521.
Bismuth iodide, 521.
Bismuth lactophosphate, 599.
Bitters flavors, sebacates in, 148.
Black coral, 691.
Black lacquers, 343.
Bladder, in cuff manufacture, 703.
Blasting gelatin, 946, 969.
—, Austrian, 946, 948.
—, Italian, 948.
—, Swiss, 946.
Blasting matagnite, 964.
Bleached cotton, nitrated, constants of, 82.
Bleached shellac, 335.
Bleaching, by chlorine, 584.
—, by permanganate, 584.
— cotton, 81.
Blending, 124
— of cordite, 934.
— powder, 925.
Bliss torpedo, 965.
Blistering collodion, 816.
Blitz paint remover, 264.
Blocking collodion press, 912.
Blood vessels, celloidin injection of, 809.
Blown oils, 367, 431.
Blue elephant bronze, 313.
Bohm-Fredersdorf distillation method, 181.
Boils, collodion for, 825.
Bombax cotton, *see* Cotton Bombax.
Bombax pentandrum, 17.
Bone, solvents of, 682.
Bonnets, imitation, 571.
Bonsilate, 682.
Book covers, celluloid inlaid, 698.
Book-cloth, viscose for, 1110.
Book printing, embossing celluloid in, 678.
Books, pyroxylin covering for, 327.
Borax, 19.
Bordeaux G, 451.
Boric acid, 303, 338.
Borides, 690.
Borneo camphor, 236, 237.
Borneol, 236.
Borneol butyrate, 240.
Borneol, oxidizing to camphor, 781.
—, preparing, 245.
Borneol propionate, 240.
Bornyl chloride, 241.
Bornyl formate, 246, 247.
Bornyl *iso*butyrate, 247.
Bornyl oxalate, 247.
Bornyl propionate, 247.
Boroid, 748.
Borosilicide, 436.
Boston paint remover, 264.
Bottle capping, viscose for, 1093.
Bottles, capping with opaque pyroxylin, 669.
Bower's test for fusel oil, 211.
Boxes, celluloid coated, 659.

Boxes, celluloid for, 723.
—, celluloid inlaid, 698.
—, celluloid, making, 633.
Bracelets, celluloid inlaid, 698.
Brain (human), celloidin impregnation of, 797.
Brandy flavors, sebacates in, 148.
Brazil wood, 331.
Brazilian cotton, *see* Cotton Brazilian.
Briancon turpentine, 309.
Brilliant azurine, 548.
Brilliant benzo blue 6B, 548.
Brilliant croceine, 547.
Brilliant dianil red R, 549.
Brilliant geranine B, 548.
— 3B, 548.
— G, 548.
Brilliant green, 330, 548.
— G, 878.
— crystals, 549.
Brilliant orange, 547.
Brilliant phosphine G, 548.
—, 3G, 548.
—, 5G, 548.
Brilliant rhoduline R, 548.
Brilliant rhoduline red, 546.
Brilliant yellow, 879.
Brin, 542.
Bristles, artificial, 525.
British gelignite, 948.
Brocade, artificial, 421.
" Brocaded " goods, imitating, 327.
Bromacetanilide, 252.
Bromacetoluides, 252.
Bromacetyl bromide, 187.
Bromides, solubility of, in alcohol, 154.
Bromo-iodized collodion, 838.
Bronze paint, 308.
Bronze paint, flash point of, 1144.
Bronzes, fineness, determination of, 316.
—, manufacture of, 315.
Bronzine, 308.
Bronzing liquids, 306, 308.
Bronzing liquids, acetate, 1028.
—, application of, 310.
—, clarification of, 309.
—, formulas for, 314.
—, gelatinization of, 310.
—, Gill's, 308.
—, heat-resisting, 313.
—, imitation, 314.
—, iridescent, 313.
—, Jacobs', 308.
—, kerosene-soluble, 314.
—, lace, gilding of, by, 311.
—, opalescence in, 315.
—, Patat's, 309.
—, testing, 315.
—, water-soluble, 314.
Brooches, celluloid inlaid, 698.
Brush handles, celluloid coated, 656.
Brush lacquers, 306.
Brushes, manufacture of, 715.
Brushing machine (for cloth), 376.
Brussels carpet, imitation, 422.
Buckles, celluloid, 662.
—, celluloid covered, 651.
—, lacquering, 331.
Bulk powders, 941, 951.
—, comparison with dense, 942.
—, for shotgun, 942.
Bulk shotgun powders, 942.
Bullseye powder, 952, 953.
Bunion cure, Kennedy's, 820.
Burlap wall coverings, 418.
Burning-off lacquers, 338.
Busts (copper), lacquering, 345.
Butalanine, 194.
Buttons, celluloid, forming, 661.
—, celluloid inlaid, 698.
—, imitation horn, 682.
—, lacquering, 331.
Butylacetanilide, 252.
Butyl acetates, 231, 302.
Butyl alcohol, 150.
n-Butyl alcohol, 184.
Butyl angelate, 149.
Butyl benzoate, 147.
Butyl butyrate, 147, 149.
Butyl carbanilate, 259.
Butylchloral hydrate, 253.
Butyl formate, 147.
Butylpentyl ketone, 151.
Butyl phthalate, 256.
Butyl succinate, 256.
Butyl valerate, 148.
Butyric anhydride, 1006.
Butyric acid, 53, 260.
Butyric ether, see ethyl butyrate.
Butyron, 151.
Butyryl chloride, 1006.

C. L. powder, 964.
Cadmium bromide, 625.
Cadmium chloride, 625.
Cadmium iodide, 625, 627.
—, as denaturant, 1129.
Calcic alcoholate, 628.
Calcium acetate, 598, 994.
Calcium arsenite, 628.
Calcium bisulphite, 1069.
Calcium bromide, 625.
Calcium butyrate, 598.
Calcium camphorate, 598.
Calcium caprylate, 321.
Calcium carbonate, decomposition of cellulose nitrates by, 53.
Calcium chloride, 318, 625.
Calcium chloride, uses of, 222.
Calcium cyanide, 260.
Calcium homocamphorate, 239.
Calcium iodide, 625.
Calcium lactate, 598, 599.
Calcium lactophosphate, 599.
Calcium linoleate, 321.
Calcium naphtholate, 240.

Calcium oleate, 321.
Calcium *m*-oxytetraethyldiamidotriphenylcarbidrid disulphonate, 1129.
Calcium phenolate, 240.
Calcium propionate, 598.
Calcium resinoleate, 321.
Calcium sulphide, 690.
Calcium valerate, 598.
Calendering, 390.
Calico printing, cellulose nitrate in, 327.
—, viscose in, 1107.
Calming collodion, 823.
Camel's hair, artificial, 404.
Camera, moving picture, 867.
Campeachy wood, 331.
Camphene, 153, 236, 240.
— hydrate, 243.
Camphene hydrochlorate, 258.
Camphogine, 629.
Camphor, 235, 299.
—, advantages as nitrocellulose solvent, 249.
Camphor and carbon bisulphide, 146.
Camphor and carbon tetrachloride, 146.
Camphor and chloral, 146.
Camphor and chloral hydrate, 146.
Camphor and shellac as solvent, 146.
Camphor and sulphurous acid, 146.
Camphor, artificial, 237.
—, as denaturant, 1127.
—, clarification of solutions of, 587.
Camphor collodions, 299.
Camphor, combining solvents with, 145.
—, combining with pyroxylin, 581.
—, crude, 235.
—, —, impurities in, 236.
—, —, refining, 236.
Camphor crystallization, 235.
Camphor, determination of, 768.
—, estimation of, in cellulose acetate plastics, 1037.
—, first use of, as solvent, 570.
Camphor gelatins, 948.
Camphor, ignition temperature, determination of, 770.
—, inflammability of, 236.
—, latent solvent point lowered by chloral, 146.
Camphor laurel, 235.
Camphor, m. pt., lowering of, 257.
—, mixing with pyroxylin, 587.
Camphor monobromide, 259.
Camphor nitrate, 756.
Camphor oil, see oil of camphor.
—, light, 236.
Camphor, purification of, 235.
—, powdering, 236.
—, preparation of, for celluloid manufacture, 586.
—, resublimation, 235.
—, solubility of, 236.
—, solvents of, 752.
—, sp.gr. of, 236.
Camphor substitutes, 248.
Camphor, synthetic, 237.
—, tests for, 238.
—, use of, with alcohols, 573.
Camphorated collodion, 749.
Camphoric acid, 238, 239.
Camphoroids, 235.
Camwood, 331.
Canada balsam, *see* balsam fir.
—, 819.
Canary II, 832.
Canella, 451.
Canes, celluloid-coated, 656.
—, coating, 347.
Cane-sugar nitrate, 58.
Cannon powder, formation, 917, 918,
Cannonite powder, 959.
Canonite powder, 959.
Cantharidal collodion, 816, 823.
—, uses, 824.
Cantharidated collodion, 823.
Cantharidin, in collodion, 817.
Canton flannel, imitation, 404.
Caoutchouc, 553.
Capric acid, 177.
Caproic acid, 177.
Capron, 151.
Caproyl alcohol, 187.
Caprylic acid, 177.
Capsules, pyroxylin, 323.
"Carat" lacquers, 330.
Carbamic esters, 207.
Carbides, 690.
Carbide black S, 548.
Carbohydrates, nitrates of, 58.
Carbolic acid, *see* phenol.
Carbon bisulphide, 262.
—, flash point of, 1144.
Carbon filaments, cellulose acetate, 1034.
Carbon paper, glazing with pyroxylin, 326.
Carbon tetrachloride, 170, 263, 266, 272, 987, 995.
—, solubility of resins, in, 170.
Carborundum, 436.
Carbuncular sores, collodion for, 818.
Card cases, celluloid sheet, 673.
—, making, 420.
Card trays, celluloid, 728.
Carding machine, purifying cotton by, 79.
Carmine, 824.
Carnauba wax, 262.
Carnelian, imitating, 694.
Carrara marble, imitating, 692.
Carriage leather, 405.
Carriage-top cloth, 405.
Carrot, pectocellulose in, 4.
Cartridges, for smokeless powder, 953.
—, waterproofing, 413, 751.
Carvol, 149.
Carvone, 1011.

Caryophyllene, 149.
Casein-creosote filaments, 519.
Casein filaments, 518.
Casein filaments, 1084.
Caseinates, 268.
Casein-guaiacal filaments, 519.
Casein-phenol filaments, 519.
Casein plastics, 763.
—, uses of, 765.
Casein silk, 518.
Casket trimmings, lacquers for, 344.
Castor oil, 253.
—, aid as pyroxylin solvent, 146.
Catechu, 331.
Catheter, celluloid, 729.
Caustic collodion, 823.
Cauteria paint remover, 264.
Cedar wood, imitating, 415.
Celakut, 824.
Cellestron silk, 1032.
Cellit, 853, 987, 1016, 1022.
—, properties of, 1019.
—, uses, 1020.
Cellite, 1016.
Cellith, 1016.
Cellobiose, 990.
Cellodine, 749.
Celloidin, 38, 606, 749, 793, 794.
—, air bubbles in, 798.
Celloidin bath, 796.
Celloidin, cutting in, 801.
—, embedding delicate objects in, 798.
—, embedding embryological specimens in, 799.
—, embedding eyes in, 799.
—, embedding in, 797.
—, embedding vegetable objects in, 798.
—, hardening of, 799.
—, —, in alcohol, 801.
—, —, by chloroform, 800.
— injection masses, 809.
Celloidin method, serial sections by, 806.
Celloidin orientation, 799.
Celloidin-paper, platinum toning of, 840.
Celloidin-paraffin embedding, 805.
Celloidin sacs, *see* collodion sacs.
Celloidin sections, clearing, 802.
—, mounting, 802.
Celloidin serial sections, 807.
Celloidin, solvents for, 796, 797.
—, therapeutic uses of, 803.
Celloidinum inelasticum, 796.
Celloline, 748.
Cellonite, 38, 580.
Cellose, 459, 990.
Cells, palisade, resistance to bleach of, 76.
Cellulide, 748.
Celluline, 748.
Cellulith, 19.
Celluloid, *see* pyroxylin plastics.
—, 38, 485, 567, 576, 748, 781, 792, 795.
Celluloid accumulators, mfr. of, 574.
Celluloid adhesives, 736.
Celluloid, air bubbles in, expulsion of, 613.
—, analyses of samples of, 765, 772.
—, ash, determination of, 766.
—, ash in, 752.
Celluloid ash receivers, 728.
Celluloid bandage, 723.
Celluloid bars, covering with, 651.
Celluloid billiard balls, 726.
Celluloid book covers, 698.
Celluloid boxes, 698, 723.
—, making, 633.
Celluloid bracelets, 698.
Celluloid brooches, 698.
Celluloid brushes, manufacture of, 715.
—, Miller's process, 717.
Celluloid buckles, 662.
Celluloid buckles, covering with, 651.
Celluloid buttons, 661, 698.
Celluloid, camphor in, determination of, 768.
Celluloid card trays, 728.
Celluloid cards, decorating, 732.
Celluloid catheter, 729.
Celluloid, cellulose nitrate in, determination of, 767.
Celluloid cements, 736.
Celluloid, cementing to hard rubber, 736.
—, cementing to iron, 737.
—, cementing to wood, 737.
Celluloid chains, 698.
Celluloid checkers, 698.
Celluloid chessmen, 698.
Celluloid, clichés, 719.
Celluloid coating, 792.
Celluloid, coating articles with, 650.
—, coating with, 681.
Celluloid collars, *see* celluloid cuffs.
Celluloid collar buttons, 661.
Celluloid, collar scrap, utilizing, 620.
—, colored designs on, producing, 745.
—, color printing on, 744.
Celluloid combs, manufacture of, 711.
Celluloid, combustion, velocity of, 753.
—, composition of, 753.
—, conductivity of, 753.
Celluloid corset stays, 727.
Celluloid corks, 699.
Celluloid crosses, 698.
Celluloid, crude, producing, 608.
Celluloid cuffs, 699.
Celluloid cuff buttons, 661.
Celluloid cuffs, coloring of, 710.
—, gloss, producing, 710.
—, imparting flexibility to, 710.
—, linen markings, imitating, 710.
—, printing on, 707.
Celluloid, decomposition, flameless, of 755.
—, decomposition of, 753.
—, decomposition products of, 755.

Celluloid, decorating, 732.
—, decreasing inflammability of, 623.
—, definition of, 38, 752.
—, denaturant for, 1128.
—, denitration of, 489, 622.
Celluloid dental plates, 719.
Celluloid, derivation of name, 579.
Celluloid dishes, 727.
Celluloid, dissolving camphor from, 752.
Celluloid dolls, 728.
Celluloid dolls' heads, 729.
Celluloid, duplicate sound record, 734.
—, dyeing, 679.
Celluloid ears, 729.
Celluloid earrings, 698.
Celluloid, ebony masses of, 736.
—, elastic yielding strength of, 753.
—, embossing, 678.
Celluloid emery grinding wheel, 730.
Celluloid, engraved plate printing on, 742.
—, explosion of, 752.
Celluloid eye bandages, 723.
Celluloid eyelets, 735.
Celluloid fans, 698.
Celluloid films, 676.
—, for color screens, 792.
Celluloid, finishing with, 681.
Celluloid forks, 698.
Celluloid, formol-albumen, 761.
—, glass cements for, 737.
—, gold, depositing on, 719.
Celluloid golf balls, 724.
Celluloid "green," 611.
Celluloid hairs, 718.
Celluloid, heel, 735.
—, ignition of, 753.
—, ignition, spontaneous, of, 754.
—, imitating ivory with, 684.
—, imitation, Tissier & Magnier, 763.
—, in collodions, 824.
Celluloid. industries, history of, 574.
—, ink for, 740.
—, inlaid jewelry, 698.
—, inlaying, 698.
Celluloid insulators, 698.
Celluloid jewel boxes, 642.
Celluloid knife handles, 698.
Celluloid labels, 747.
Celluloid lacquers, *see* lacquers, celluloid.
—, 318, 333.
—, analysis of, 333.
Celluloid lining for pitchers, 730.
Celluloid magic lantern slides, 870.
Celluloid manufacture, history of, 576.
—, Magnus method, 605.
—, Hyatt's process, 580.
—, —, Miller method, 614.
—, —, Stains' method, 623.
—, martingale rings, 647.
—, matches of, 968.
Celluloid medallions, 689, 698.
Celluloid mirrors, 718.
Celluloid mirror backs, 718.
Celluloid moldings, 731.
Celluloid, molding objects from, 660.
—, mottled effect in, 638.
—, mounting jewels in, 715.
Celluloid mouth whistles, 664.
Celluloid mud guards, mfr. of, 574.
Celluloid nail brushes, mfr. of, 716.
Celluloid negatives, varnishing, 844.
Celluloid, nitrogen in, determination of, 767.
Celluloid open-seam coverings, 646.
Celluloid optical frame, 733.
Celluloid packing rings, 698.
Celluloid, paper coated, 673.
Celluloid parlor tennis balls, 727.
Celluloid, pastel pictures on, 741.
—, pencil cases, 642.
Celluloid penholders, 737.
Celluloid pens, 737.
Celluloid pessary, 729.
Celluloid phonograph cylinders, 733.
Celluloid piano keys, 731.
Celluloid pin trays, 728.
Celluloid ping pong balls, 726.
Celluloid pins, 698.
Celluloid pistons, 698.
Celluloid plates, coating, 842.
—, mfr. of, 669.
Celluloid playing cards, 732.
Celluloid, "polka dot" printing with, 741.
—, porcelain cements for, 737.
—, porous, formation, 607.
Celluloid press, 607, 721.
Celluloid printing blocks, 747.
Celluloid printing inks, 741.
Celluloid, printing on, 741.
—, printing (transparent) on, 744.
—, printing on textiles, 741.
—, printing on, with bronzes, 744.
—, properties of, 751.
Celluloid purses, 698.
Celluloid quills, 737.
Celluloid, reactions of, 765.
Celluloid records, 734.
Celluloid rings, 647, 662, 698.
Celluloid scrap, dissolving, 394.
—, utilization of, 333, 618.
Celluloid, "seasoned," 611.
—, seasoning crude, 611.
—, seasoning, McCaine method, 613.
Celluloid sheets, balloons of, 676.
—, binding, 673.
—, continuous, Edson's method, 670.
—, —, polishing, 678.
—, drying, 670.
—, dull, 672.
—, finishes on, 672.
—, fire-proofing, 674.
—, forming, 668.
—, graining of, 743.
—, pebbled, 672.

Celluloid sheets, polished, 672.
—, polishing, 670, 676, 678.
—, reinforcement of, 676.
—, scratched, smoothing, 673.
—, seasoning of thin, 612.
—, sewing, 673.
—, silvering, 718.
—, stained, 675.
—, variability in thickness, overcoming, 672.
Celluloid signs, 673.
Celluloid signs, mfr. of, 744.
—, weather proof, 744.
Celluloid, silvering, 719.
Celluloid, silver, depositing on, 719.
—, softening, 619.
—, solubility in acetone, 755, 806.
—, solvent in determination of, 766.
—, " solvent polishing " of, 597.
—, solvents of, 752.
—, sp.gr. of, 753.
Celluloid spoons, 698.
Celluloid, stability of, 755.
—, stabilizer in, determination of, 767.
Celluloid stamps, 747.
Celluloid starch, 699.
Celluloid stays, 727.
Celluloid stop cocks, 698.
Celluloid storage cells, 698.
Celluloid, stratified effect in, 638.
Celluloid studs, 662.
Celluloid stuffing boxes, 698.
Celluloid substitute, 781, 792.
—, Assadas', 757.
—, Chanard's, 762.
—, Hellriegel, 762.
—, Labbé's, 626.
—, Rouxeville's, 754, 780.
—, Stocker and Lehmann's, 762.
—, Thornton and Seymour's, 756.
—, uninflammable, 626.
Celluloid supports, 723.
Celluloid, surgery, uses in, 721.
Celluloid syringes, 729.
Celluloid, tensile strength of, 753.
Celluloid tooth brushes, mfr. of, 716.
Celluloid, trade mark of, 577.
—, transferring designs to, 745.
—, transfer pictures on, 744.
Celluloid trays, 727.
Celluloid tubes, contracting, 729.
Celluloid, type printing on, 742.
—, unstable, detection of, 754.
Celluloid vases, making, 633.
Celluloid, veneering with, 673.
Celluloid vulcanizer, 721.
Celluloid, warpage of, 611.
Celluloid, waste, camphor recovery from, 621.
—, recovery of, Tortelli process, 621.
—, utilizing, 617.
—, —, Garbin apparatus, 620.
Celluloid, water color painting on, 744.
Celluloid, water color pictures on, 741.
—, waterproofing explosives with, 939.
Celluloid whistles, 664.
Celluloid wind breaks (automobile), 672.
Celluloid writing ink, 740.
Celluloidine, 962.
Cellulone, 451.
Cellulose, *see also* Celluloses.
—, 1.
Cellulose acetate, 1005, 1010.
Cellulose acetates (lower), 1025.
Cellulose acetate, acetone-soluble, 996.
—, alcohol-soluble, 998, 1018.
—, analytical, 1036.
Cellulose acetate bronzing liquids, 1028.
Cellulose acetate, cements, 736.
—, chemistry of, 988.
—, chloroformic solution, viscosity of, 988.
Cellulose acetate coatings, frosted, 1021.
Cellulose acetate, dyed, mfr. of, 792.
—, dyeing, 781, 1023.
—, determination acetic acid in, 1053.
—, determination of, 1036.
—, elasticity, increasing, 781.
Cellulose acetate filaments, 1032.
—, microscopy of, 1035.
—, softening, 1033.
Cellulose acetate films, 1013, 1014.
Cellulose acetate, from mercerized cotton, 1000.
—, Geinsperger's, 990.
—, history of, 985.
—, inflammability of, 988.
—, insulating capacity of, 1031.
Cellulose acetate lacquers, 1027.
—, properties, 1028.
Cellulose acetate lakes, 962, 996.
Cellulose acetate, Macquenne and Goodwin's, 990.
—, mfr., Boesch process, 1001.
—, mfr. by Lederer process, 995.
—, mfr. from regenerated cellulose, 1000.
—, mfr., Strehlenert and Reubold method, 987.
—, mfr. with dehydrating agents, 992.
—, methods of mfr., 991.
—, methyl formate with, 999.
—, non-solvents of, 988.
—, plastic, 987, 1010, 1013, 1014, 1016, 1022.
—, —, camphor in, estimation of, 1037.
—, printing with, 997.
—, properties of, 988.
—, purification of, 1002.
—, refraction of, 990.
Cellulose acetate-resin lacquer, 1027.
Cellulose acetate, saponification of, 1043.
—, separation from formate, 1005.
Cellulose acetate sheets, 1034.
Cellolose acetate silk, properties of, 1035.

Cellulose acetates, solubility in ether, 167.
—, solubility in nitrobenzene, 990.
—, solution of, viscosity, 988.
—, solvents of, 987, 988, 1017.
—, specific inductive capacity, 1031.
—, viscosity of solutions, 1028.
Cellulose, acetation of, *see* cellulose acetate.
—, acetation, inhibiting agents for, 992.
—, acetation of, inhibiting, 987.
—, acetation, speed of, governed by, 992.
Cellulose acetobenzoates, 985.
Cellulose acetobutyrate, 1007.
Cellulose aceto-formate, 1005.
Cellulose aceto-nitrates, 117, 996, 1003, 1011, 1012, 1027.
Cellulose acetopropionates, 1007.
Cellulose acetosulphates, 985, 991, 1007.
Cellulose, action of acids on, 7, 8.
—, action of alkalis on, 9, 1057.
—, action alkaline sulphides on, 10.
—, action of bromine on, 11.
—, action of chlorine on, 11.
—, action of chromic acid on, 11.
—, action of dilute sulphuric acid on, 7.
—, action of hydrofluoric acid on, 9.
—, action of liquid nitrogen peroxide on, 33.
—, action nitric acid on, 21.
—, action of oxidizing agents on, 11.
—, action of permanganates on, 11.
—, action of vegetable acids on, 9.
—, ammoniacal copper solutions of, 498.
—, amorphous products of, 78.
Cellulose and iodine, 6.
Cellulose and water, 5.
Cellulose, ash in, 5.
Cellulose benzoates, 1007.
Cellulose, bleaching after nitration, 81.
Cellulose butyrate, 1003, 1006, 1010.
Cellulose, catalysts for, 994.
—, change to hydrocellulose, 6.
Cellulose cinematograph films, waterproofing, 862.
Cellulose, constitution of, 2.
—, Cross method of nitration of, 78.
—, cuprammonium solutions of, 496.
—, cupric solvents of, 499.
—, degree of hydration of, 7.
—, determination of, 1112.
Cellulose diformate, *see* cellulose formate.
Cellulose, disintegration of, 78.
—, empirical formula of, 1.
—, estimation of, 71.
Cellulose fabrics, acetylating, 995.
Cellulose, factors governing nitration of, 32.
Cellulose films, glazing, 860.
Cellulose formate, 781, 792, 1004, 1005, 1006.
—, preparation of, 995.
Cellulose formate separation from acetate, 1005.
Cellulose formate, solubility of, 1005.
—, solvents for, 1005.
Cellulose formo-acetate, 1005.
Cellulose from maize, 17.
Cellulose, groups in, 2.
Cellulose hydrates, 7, 986, 992.
—, adsorption of NaOH by, 1058.
—, difference from hydrocelluloses, 7.
—, water in, 1041.
Cellulose hydracetate, 1018.
Cellulose, "hygroscopic moisture" in, 5.
—, hygroscopicity of, 6.
—, impregnation of, 19.
—, in human spleen, 1.
Cellulose in nitrocellulose, estimation of, 71.
Cellulose in tuberculosis, 1.
Cellulose, insolubility in water, 6.
—, kind used for nitration, 38.
—, mechanics of nitration of, 37.
Cellulose monoformate, *see* cellulose formate.
Cellulose, nitrating, 76.
—, origin of, 2.
Cellulose palmitate, 1007.
Cellulose phenylacetate, 1007.
Cellulose, preliminary boiling, 76.
Cellulose propionate, 1006.
Cellulose, separation of, 4.
—, separation of silica from, 5.
Cellulose silk, strength of, 1035.
Cellulose simplest mol.wt. of, 25.
Cellulose, "soluble," method of producing, 76.
—, solubility of, in zinc chloride, 8.
—, solution in cuprammonium, 501, 502.
—, source for Chardonnet filaments, 469.
—, structure as influencing nitration, 40.
Cellulose sulphocarbonate, *see also* viscose, 1055.
Cellulose sulphuric acid, 50.
Cellulose-sulphuric acid esters, 49.
Cellulose, synthesis of, 2.
—, tendering of, 993.
Cellulose tetracetate, 1003.
—, Henckel-Donnersmarck process for, 1004.
Cellulose thiocarbonate, *see also* viscose.
Cellulose thiosulphocarbonate, *see* viscose.
Cellulose triacetate, 990.
Cellulose triformate, *see* cellulose formate.
Cellulose tripropionate, *see* cellulose propionate.
Cellulose, U. S. Ordnance requirements, 41.
—, unnitrated, estimation of, 71.
Cellulose waterproofing preparations, 19.
Cellulose xanthate, *see also* Viscose.
—, 1055, 1059.

Cellulose xanthate, determination, 1112.
—, influence excess of alkali on, 1061.
Celluloses, *see also* cellulose.
—, animal, 1.
—, classification of, 3.
—, description of, 1.
—, elementary composition of, 1.
—, nitrated, 59.
Celluloses proper, 3.
Cellulose nitrate, *see also* collodion, pyroxylin, celluloid, pyralin, celloidin, etc.
Cellulose nitrate, 24.
—, absorption bands of, 44.
—, acetylated, 996.
—, acidity, detection, 121.
—, action of solvents on, 588.
—, action polarized light on, 44.
—, alcohol soluble, preparation, 107.
—, alkaline products in hydrolysis of, 34.
Cellulose nitrate (paper), analysis of, 114.
Cellulose nitrate, applying to leather, 449.
—, ash, determination, 972.
—, beating, 585.
—, bleaching, 584.
—, blending, 124.
Cellulose nitrate "blocks," 906.
Cellulose nitrate capsules, 323.
Cellulose nitrate, casein with, 764.
Cellulose nitrate "cheese," 906.
Cellulose nitrates, classes produced in, U. S., 75.
—, classification of, 28.
—, colloided, filtering, 911.
—, colloiding, 906.
—, —, Williams' method, 957.
—, combining with camphor, 587.
—, combining with cellulose acetate, 1011.
—, commercial names of, 37.
—, conversion into plastic, 606.
—, conversion of, 158, 606.
—, conveyor for, 103.
—, correct name of, 21.
—, decomposition by denitrifying bacteria, 51.
—, dehydration, *see* Dehydration.
—, dehydration, 599, 903.
—, denitration of, 473, 484, 487, 521.
—, denitrated, breaking strain, 552.
—, density, 42.
—, deterioration at a given temperature, 53.
—, deterioration on storage, 53.
—, determination acidity in, 972.
—, determination alkalinity in, 972.
—, determination moisture in, 972.
—, determination of, 359.
—, dialysis through, 45.
—, discovery of, 22.
—, dry, transporting, 1143.
—, drying, 88, 130.
Cellulose nitrates, drying, Passburg system, 130.
—, —, Quinan method, 130.
—, duplication of from description, 38.
—, early experiments in England, 23.
—, early experiments in Prussia, 23.
—, early experiments in Russia, 23.
—, early history, 21.
—, effect of oxy- and hydro-cellulose on stability of, 51.
—, effect of sulphuric esters on stability of, 50.
—, effect of wax on stability of, 51.
—, elimination of acid from, 74.
Cellulose nitrate explosives, powdering, 981.
Cellulose nitrate, extinction coefficient of, 44.
Cellulose nitrate filaments, *see* Chardonnet, Lehner, Du Vivier, Crespin, Denis, Cazeneuve.
—, breaking strain of, 553.
—, dry spinning, of 462.
—, Lehner's process, 471.
Cellulose nitrate, filament processes, 484.
Cellulose nitrate filaments, properties of, 470.
—, Vivier, microscopy of, 480.
Cellulose nitrate films, opaque, producing, 669.
Cellulose nitrate, filter press for, 486.
—, filtration of, 532.
—, first U. S. patent for, 73.
—, "flakeing," 904.
—, for gelatin mfr., 946.
—, wash house for, 910.
—, formula for producing soluble in ether-alcohol, 31.
—, from cotton dust, 106.
—, gelatinized, microscopy of, 906.
—, gelatinizing, 906.
—, granulating, 943.
—, heating with phenylhydrazine, 34.
—, heating with *p*-bromphenylhydrazine, 34.
—, highest, 25.
—, horny, making, 781.
—, hydrocellulose in, 78.
Cellulose nitrate hydroextractor, 905.
Cellulose nitrate, hydrolysis (acid), 120.
—, hydrous, solubility of, 535.
—, hygroscopicity of, 45.
—, impurities, removal, 123.
—, in calico printing, 327.
—, insoluble nitrocellulose, determination of, 972.
—, iron, removal of, 123.
—, limits of ether and alcohol which will dissolve, 33.
—, liquid compounds, 161.
—, lower, properties of, 117.
—, Lunge's work on the, 29.
—, mfr. by Lenk's method, 23.

Cellulose nitrate, mfr. of, 792.
—, mercury in, 52.
—, microscopy of, preparation of object, 796.
—, moisture, determination of, 983.
—, neutralizing with water glass, 73.
—, nitrogen in, 115.
—, nitrogen (low), in, 115.
Cellulose nitrate non-solvents, 169.
Cellulose nitrate, "normal," 976.
—, of Eder, 26.
—, optical properties of, 44.
—, organic residue, determination, 972.
—, oxycellulose in, 78.
—, pharmacopeal, preparation, 115.
—, photography, 827.
Cellulose nitrate plastic, formation of, 606.
Cellulose nitrates, poaching, 76.
—, pressures in combustion of, 28.
—, prior treatment of cellulose on properties of, 34.
—, properties of, 42.
—, pulping, 76, 585.
—, purifying, du Pont method, 118.
—, rate of decomposition of, 53.
—, ratio of moisture to ester groups, 46.
—, reduction of, 487.
—, relation of reaction velocity to temperature, 54.
—, removal of oxycellulose nitrates from, 51.
Cellulose nitrate sheets, continuous, 852.
Cellulose nitrates, solid compounds, 161.
—, soluble nitrocellulose, determination of, 972.
—, solubility, determination of, 62.
—, —, (ether-alcohol), increasing, 123.
—, solubility in acetone, 166.
—, solubility in chlorhydrins, 172.
—, solubility of decomposition products of, 53.
—, solubility in ether, increasing, 973.
—, solubility of variations in, 47.
Cellulose nitrate solutions, filtering, 486.
—, filter pumps for, 486.
—, filtration of, 461.
—, preparation of, for filaments, 461.
Cellulose nitrate solvents, acetals, 485.
—, action and applicability of, 162.
—, chemical composition of, 160.
—, classes of, 159.
—, classification of, 164.
—, —, from tar, 156.
—, —, ideal, 164.
—, stability, influence of chalk on, 53.
—, stability influenced by ulmic bodies, 52.
—, stability of, 50.
—, stability of from wood-pulp, 53.
Cellulose nitrate stabilizer, ammonium carbamate, 120.
—, ammonium oxalate, 120.
—, urea, 120.
Cellulose nitrate, stabilizing, 118.
—, —, Luck and Cross method, 120.
—, —, Schüpphaus method, 120.
—, stabilizing by solvent removal, 54.
—, sulphur, determination of, 117.
—, table of Vieille's results, 29.
Cellulose nitrate tubes, 322.
Cellulose nitrates, U. S. Ordnance requirements for mfr. of, 76.
—, variation in fluidity of, 48.
—, variations in viscosity of, 47, 48.
—, variations in solubility of, 32.
—, viscosity factor, 88.
—, viscosity of, 47, 88.
—, washing by Schaffner's method, 74.
—, washing of, 85.
—, waterproofing with, 413.
—, wet, transporting, 1145.
Cellulose, nitration, 114.
—, —, de Brialles' method, 117.
—, nitration by centrifugals, 90.
—, nitration, centrifugal, 90.
—, —, Claessen method, 107.
—, —, continuous, 114.
—, —, Crane and Joyce method, 117.
—, —, determination of, 971.
—, —, displacement, 96, 119.
—, —, —, advantages, 101.
—, —, foreign bodies, removal, 123.
—, —, Hernstein method, 116.
—, —, immersion of, 99.
—, —, Luck and Durnford method, 118.
—, —, neutralizing, 119.
—, nitration of, Du Vivier, 479.
—, —, hand, 86.
—, —, Lehner, 473.
—, —, prewashing, 85.
—, nitration, poaching, 124.
—, —, pulping, 121.
—, —, Quinan method, 118.
—, —, Voigt method, 116.
—, —, washing, 118.
—, —, washing (pressure), 119.
—, —, washing, Robertson method, 120.
—, —, yields, 86, 90, 101, 114.
Cellulose nitrites, 1111.
—, solubility, 1111.
Cellulose-slime, 750.
Cellulo silk, 511, 542.
Cellulotrinitrin, 856.
Celluvert, 18.
Celtite, 949.
Celvis, 459.
Cements, artificial leather, 423.
—, belt, 424.
—, celluloid, 736.
—, cellulose acetate, 736.
—, tire, pyroxylin, 424.
Central nervous system, celloidin sections of, 807.
Centrifugal nitration, 90.
Centrifuge, urinary, 63.
Ceramics, images on, reproduction of, 885.

Cere-cloth, 408.
Ceresine, *see* paraffin.
Cerofirm, 357.
Cerise, 548.
Chace artificial leather, 370.
Chains, celluloid inlaid, 698.
Chalcedony, imitating, 694.
Chalcedony quartz, 693.
Chalk, as acid neutralizant, 53.
Chamois, 428.
Chamois, artificial, 401.
Chardonnet filaments, dyeing, 1091.
Chardonnet filament-forming apparatus, 463.
Chardonnet's nitration process, 90.
Chardonnet silk, 460.
—, microscopical appearance, 550.
—, output, 460.
—, strength, 1035.
Chardonnet spinning apparatus, 463.
Checkers, celluloid inlaid, 698.
Chessmen, celluloid inlaid, 698.
Chicago spirits, 272.
Chifolineis, 561.
Chilblains, collodion for, 824.
Chilworth smokeless sporting powder, 963.
China green, 330.
Chinchilla skin, pyroxylin coated, 408.
Chinese blue, 447.
Chinese camphor, 236.
Chinese gelatin, 268.
Chinese gold paint, 308.
Chinese wax, 265.
Chips (poker), mfr. of, 679.
Chloracetanilide, 252.
Chloracetates, 598.
Chloracetate of chloramyl, 150, 301.
Chloracetic acids, 997.
Chloracetyl chloride, 187.
Choral, 146, 1011.
Choral alcoholate, 252, 1011.
Choral hydrate, 146, 253, 258, 842, 1015.
Choral hydrate mfr., denaturant for, 1140.
Chloramine orange, 548.
Chloramine yellow, 548.
Chloramine yellow M, 548.
Chlorantine brown B, 548.
Chlorantine brown BB, 548.
Chlorantine brown R, 548.
Chlorantine lilac B, 548.
Chlorantine lilac BB, 548.
Chlorantine lilac R, 548.
Chlorantine orange TR, 548.
Chlorantine orange TRR, 548.
Chlorantine pink, 548.
Chlorantine red 4B, 548.
Chlorantine red 8B, 548.
Chlorantine violet B, 548.
Chlorantine violet R, 548.
Chlorantine yellow JG, 548.
Chlorantine yellow JJ, 548.
p-Chlorbenzenesulfanilid, 256.
p-Chlorbenzenesulfo-β-naphthol, 256.
Chlorbutyrates, 598.
Chlorethanes, 171.
Chlorformates, 598.
Chlorhydrins, 265, 524, 947.
Chlorinated stearic acid, 253, 1021.
Chlorides, solubility of in alcohol, 154.
Chlorine, bleaching by, 584.
Chlorlactates, 598.
Chlorobenzene, 265.
o-Chlorobenzoic acid, 248.
Chloroform, 170, 263.
Chlorophyl, 832.
Chlorpropionates, 598.
p-Chlorsulphamid, 256.
Chrolithion, 749.
Chromatin, 444.
Chrome-tan leather, *see* leather, chrome-tan.
Chromic bromide, 625.
Chromic chloride, 444, 625.
Chromic iodide, 625.
Chromion, 444.
Chromium mordants, 11.
" Chromo " glue, 1010.
Chromous salts as denitrifiers, 488.
Chronophotography, 866.
Chrysoidine, 330, 451, 549.
Chrysoidine collodion, 878.
Chrysoidine G, 548.
Chrysoine, 451.
Chrysophenine, 330, 401.
Cibalite powder, 964.
Cigar tips, lacquering, 320.
Cinematographic bands, 792.
Cinematographic films, preserving, 860.
—, uninflammable, 1020.
Cineol, 148.
Cineone, 236.
Cinnabar, *see* mercuric sulphide.
Cinnamic aldehyde, 148, 153.
Cinnamyl benzoate, 251.
Cinnamyl cinnamate, 251.
Citrene, 149.
Citric acid, 260, 485, 885.
Citronellal, 148.
Clamond process, 358.
Claudin-Morin apparatus, 179.
Clermonite powder, 961, 964.
Clichés, celluloid, 719.
Clock molding, celluloid coated, 653.
Clostridium butyricum, 197.
Cloth, brushing of, 376.
—, cleaning of, 375.
—, coating of, 378.
—, coating with pyroxylin, 378.
—, dyeing of, 371.
—, inspecting, 375.
—, measuring, 374.
—, moleskin, coating, 380.
—, nitrated filter, 72.
Cloth printing, viscose in, 1107.

Cloth, sateen, coating, 380.
—, singeing of, 376.
—, stitching, 377.
Clysol, 1103.
Coal naphtha, *see* benzine.
Coats of arms, producing on leather, 395.
Cobalt reaction with amyl alcohol, 207.
Cobaltous bromide, 625.
Cobaltous chloride, 152, 625, 796.
Cobaltous iodide, 625.
Cobaltous salts as denitrifiers, 488.
Cochineal, 331.
Cochius viscosimeter, 64.
Coehlea, celloidin embedding of, 799.
Coggswell mill, 79.
" Cold bath " platinum paper, 837.
Collars, *see* cuffs.
Collar buttons, celluloid, forming, 661.
Collars, linen, imitation, 574.
Collodin, 899.
Collodine, 749.
Collodio-albumen process, 884.
Collodio-bromide emulsion, 829, 838.
Collodio-bromo-chloride emulsion, 837.
Colloido-bromo-iodide process, 838.
Collodio-chloride emulsion, 832, 838.
Collodio-chloride paper, 832.
—, preparation of, 837.
Collodio-chloride process, 836.
—, Heiderstadt's, 837.
—, Vogel's, 837.
Collodio-chlorobromide emulsion, 832.
Collodio-citro-chloride process, 835.
Collodio-gelatin films, 842, 862.
Collodion, *see* cellulose nitrate.
—, *see* collodium.
—, 37.
—, acidity in, 825.
—, analysis of, 825.
—, analytical use, 825.
—, anarthritic, 823.
—, antephelidicum, 823.
—, antiseptic, 819.
—, antiseptics in, 824.
—, auramine, 878.
—, aurantia, 878.
—, balloons, 890.
—, blistering, 816.
—, bromo-iodized, 838.
—, bunion, 820.
—, Caldwell's formula, 819.
—, calming, 823.
—, camphorated, 749.
—, cantharidal, 823.
—, cartharidated, 823.
—, caustic, 823.
—, chrysoidin, 878.
—, clarifying, 821.
—, color photography with, 878.
Collodion color screens, 880.
Collodion, clouding, on evaporation, preventing, 821.
Collodion, conial, 823.
—, corrosive, 823.
—, creosoted, 819.
—, croton oil, 823.
—, definition of, 829.
—, developers for, 835.
—, dialysis of pancreatic secretion through, 812.
Collodion diapositives, 832.
Collodion, dispensing, 824.
Collodion dry plates for acid and alkaline development, 838.
Collodion duplex, 823.
Collodion emulsion, Dawson's, 893.
Collodion, early publications on, 815.
—, early use of, 815.
Collodion emulsion, 829, 883.
—, blisters in, 835.
—, classification of, 832.
—, defects in, 835.
—, fogging in, 835.
—, isochromatic, 877.
—, keeping qualities of, 834.
—, manipulation of, 833.
Collodion emulsion negatives, intensification of, 889.
Collodion emulsion preservative, 893.
Collodion emulsion, printing out, 833.
—, ripening of, 831.
—, salts in, function of, 830.
—, sensitiveness of, 832.
—, sensitizing, 832.
—, spreading machine for, 844.
—, stability of, 834.
—, streaking in, 835.
—, trichrome, 892.
—, unwashed, 830.
—, uses of, 828.
Collodion emulsion varnish, 893.
Collodion emulsion, viscosity of, 835.
—, washed, 830.
—, without sensitizers, 833.
Collodion enamel, 844, 873.
Collodion enamel glazing process, 893.
Collodion, epispastic, 816.
—, ferrotype, 892.
—, ferruginous, 823.
Collodion films, *see also* films.
—, manufacture, 839.
—, physical testing of, 894.
—, Röntgen photography, 833.
Collodion, flash point of, 1144.
—, flexile, 817.
Collodion for double transfer from opal, 893.
Collodion, gelatinous, 823.
Collodion-gelatin section process, 808.
Collodion, Gezow's, 823.
—, glycerized, 819.
—, half-tone iodized, 893.
—, half-tone work, 887.
—, history of, in photography, 828.
Collodion incandescents, 521.

Collodion in photography, discovery of, 828.
Collodion, iodinal, 823.
Collodion iodized, 823, 838.
Collodion, iodosulphural, 823.
—, Klein's formula, 819.
Collodion lacquers, 298.
Collodion lantern slides, 869.
Collodion, large plate, 892.
—, leather, 844.
—, line negatives with, 887.
—, line plain, 893.
—, line production with, 887.
—, mfr. of, for collodion by Schering, 75.
—, medicated, 824.
Collodion membrane, effect on glucosides, 814.
—, emulsion with, 814.
—, forcing liquids through, 813.
—, pepsin with, 814.
—, permeability, variations in, 814.
—, polarization by, 813.
—, properties of, 812.
—, ptyalin with, 814.
—, reflection by, 813.
—, rennet with, 814.
—, semipermeability of, 813.
—, takadiastase with, 814.
—, trypsin with, 814.
Collodion, menthol, 825.
—, National Formulary, 823.
Collodion negatives, developer for, 831.
—, stripping, 845.
Collodion, nitrogen in typical, 31.
Collodion ointments, 820.
Collodion opals, 869.
Collodion, orthochromatizing, 832.
—, paper, 823, 833.
Collodion paper process, 828.
Collodion paper, Vollenbruch process, 837.
Collodion, paraform, 819.
—, Pavy's, 820.
—, pharmacopœal, 816.
—, —, changes recommended in, 821.
—, —, preparing, 820.
—, plain, 830.
Collodion plates, coating, 834, 835.
—, defects in, 835.
—, fogging of, 835.
—, streaking in, 835.
Collodion, porus, 885.
Collodion positives, 874.
Collodion positives on enamel, 828.
Collodion, preparation of, 532, 831,
Collodion preservatives, 829, 836.
Collodion, process work with, 887.
—, properties of, 816.
—, proprietary, 823.
Collodion sacs, 810.
—, preparing, 811.
—, sterilizing, 812.
Collodion, salicylated, comp., 823.
Collodion, screen negatives with, 887.
—, sediment in, 821.
—, sensitive, coating leather with, 887.
Collodion sensitizing bath, reaction, 835.
Collodion sheets, producing, 852.
Collodion, sinapic, 823.
—, Stocker's unburnable, 625.
—, storing, 781.
Collodion stripping, 877.
Collodion substitute, 819, 825.
Collodion, tests for, 825.
—, total solids in, 825.
—, transfer, 844, 873.
Collodion transfer emulsion, 892.
Collodion transparencies, 869.
Collodion, uses, in medicine, 824.
—, —, in pharmacy, 824.
—, visibility, decreasing on skin, 824.
—, wart, 820.
Collodionage of cells, 809.
Collodionization of sections, 808.
Collodiotype, 844.
Collodium, *see* collodion.
—, 37, 797.
Collodium antisepticum, 819.
Collodium cantharidatum, 816.
Collodium elasticum, 819.
Collodium flexile, 817.
Collodium lentescens, 823.
Collodium, pharmacopœal, 115.
Collodium rubrum, 823.
Collodium stypticum, 820.
Collogen, 749.
Cologne spirits, flash point of, 1144.
Colloids, bibliography of, 3.
Collotype plates, 845.
Collotype printing film, 845.
Collotype printing plate, 844.
Colloxylin, 37, 795.
Colophony, 253.
Color photography, collodion in, 878.
Color screens, collodion, 880.
Colored celloidin injections, 809.
Colored lacquers, 328.
Colored screens, photographic, celluloid, 732.
Colt rifle, 898.
Columbian spirits, flash point of, 1144.
Colza oil, 416.
Combs, celluloid, 911.
—, Hackenberg process, 713.
—, horn, 711, 712.
—, Hyatt process, 711.
—, metal, 711.
—, plastic, manufacture of, 711.
—, polishing, 713.
—, tortoise shell (artificial), 713.
—, wood, 711.
Compound celluloses, 3.
Compound turpentine, 272.
Condensed powder, 941, 951.
Confectioner's colors, denaturant in mfr. of, 1141.

Confectionery, cellulose acetate in, 1010.
Congo corinth, 371.
Congo paper, preparation, 1117.
Conial collodion, 823.
Consistency-apparatus, 63.
Continuous photographie films, 845.
Continuous pictures, developing, 868, 869.
—, printing, 868.
Cooppal powder, 964.
Cooppal No. 2 powder, 901, 963.
Copaiba, 321.
Copal, 309, 334, 339, 1028.
Copal lacquers, 340.
Coplin & Crowe color strainer, 372.
Copper bromide, 888.
Copper carbonate, 345.
" Copper figure," 1044, 1045, 1052.
Copper hydroxide cellulose, 497.
Copper oxychloride, as cellulose solvent, 499.
Copper, powdering, 315.
Copper resinate, 263.
Copper-tetramine sulphate, 500.
Copper-tetraminesulphite, 499, 500.
Copper wire, cellulose acetate insulated, 1029.
Copper xanthate, 1059.
Copperized ammonia, 496.
" Copper value " of cellulose, 7.
Coral artificial, 690.
Coral, definition of, 690.
Coraline, 748, 749.
Coralines, mounting of, 328.
Coralline, 748.
Corallium rubrum, 690.
Cordite, 621, 900, 928, 930.
—, blending of, 934.
—, combustion of, 935.
—, composition of, 929.
—, constants of explosion of, 934.
—, desirable qualities of, 936.
—, manufacturing method, 936.
—, properties of, 931.
—, purity acetone used in, 41.
—, reeling of, 932.
—, specifications for, 982.
—, stability of, 982.
—, testing, 981.
Cordite Mark I, 907.
Cordite M.D., 907, 929, 933, 937, 953.
Cordite M. D. S., 929.
—, ballistics of, 933.
—, temperature of combustion, 933
Corin, 444.
Coriphosphine, 451.
Corks, celluloid, 699.
—, composition, 407.
Corn collodions, 820.
Corn cures, 820.
Corniees, viseoid, 1098.
Coroline, 748.
Coronite, 949.
Corrosive collodion, 823.
Corset stays, celluloid, 727.
—, enameling, 332.
Corticine, 408.
Cott-A-Lap, 419.
Cotton, *see* Cellulose.
Cotton, acetating, superficially, 1026.
—, acetylated, moisture content of, 1027.
—, action of sulphuric and nitric acids on, 37.
—, affinity of basic dyes for, 9.
—, air in, 102.
—, bleached, constants of nitrated, 82.
—, bleaching of, 81.
—, bombax, 17.
—, botany of, 11.
—, Brazilian, 12.
—, breaking strain of, 552.
—, commercial varieties, 13.
—, compared with flax, 40.
—, damp, nitration of, 82.
—, degreasing of, 39.
—, drying of, 82.
Cotton dust, nitration of, 106.
Cotton, early history of, 13.
—, effect of humidity on, 46.
—, effect of immersion of, in water, 46.
—, effect of season on, 39.
—, Egyptian, 10, 12, 38.
—, fat in, 81.
Cotton fiber, picking, 79.
—, separating, 79.
—, nitration of, 61.
—, structure affected by bleaching, 81.
Cotton, gathering the, 13.
—, German military requirements for, 81.
—, gloss, producing on, 485.
—, Indian, 12.
—, introduction of, into England, 13.
—, introduction into Europe, 13.
—, kind used for cordite, 929.
—, light blue, 732.
—, " long Georgia," 14.
—, " long staple," 13.
—, Memphis Star, 86.
—, method of determining density, 43.
—, moisture in, 83.
—, moisture in spinning of, 6.
—, nitration by Maxim's process, 74.
—, nitration of American, 40.
—, nitration of Egyptian, 40.
—, object of moisture removal, 82.
—, occurrence, 11.
—, Peruvian, 12.
Cotton plant, cultivation of, 12.
" Cotton powder," 961.
Cotton, pressure boiling of, 81.
Cotton red 11B 1436, 548.
Cotton, refractive index of, 45.
—, scouring of, 80, 86.
—, scouring, objects of, 80.
—, Sea Island, 14, 38.
—, " short staple," 13.

Cotton, Smyrna, 14.
—, structure of fiber, 14.
—, Surat, 12.
—, treatment of, preliminary to nitration, 77.
—, treatment to resist dyestuffs, 1026.
Cotton waste, purification of, 39.
—, teasing, 79.
Cotton, world's annual output, 13.
Cotton yellow CH, 548.
Cotton xyloidine, 571.
Cottons, nitration of various, 40.
Cottonseed hulls, nitration of, 60.
Coumarin, 149.
" Count " of cotton, 14.
Crape markings (in collodion), 835.
Creosote, 424, 802, 819.
Creosoted collodion, 819.
Crepe effects, producing by mercerization, 1057.
Crepe, imitation, producing, 327.
Cresol, 252, 267, 747, 764, 1013, 1033.
o-Cresol, 758.
Cresotine yellow G, 549.
Crespin silk, 480.
Cresyl acetate, 267.
Cresyl acetic acid, 267.
Cresylic acid, 267.
Cresyl *p*-toluenesulphethylanilide, 254.
Cresyl *p*-toluenesulphonate, 254.
Crimped effects, producing by mercerization, 1057.
Crinoil, *see* crinol.
Crinol, 525.
Crinol filaments, 1023.
Crocein scarlet 3BN, 451.
Crocodile skin, imitation, 428.
Cromar, 444.
Cromast, 444.
Cromul, 444.
Crosses, celluloid inlaid, 698.
Croton oil collodion, 823.
Crude fiber, 4.
" Crushed " goods, imitating, 327.
Cryolite, 262.
Crystal violet, 451.
Crystal violet 5BO, 548.
Crystal violet 10B, 548.
Crystalline, *see* Krystalline.
Crystalloid, 673, 751.
Cuba yellow, 451.
Cudbear, 331.
Cuff, 699.
Cuff buttons, celluloid, forming, 661.
Cuffs, linen, imitation, *see* collars.
—, pyroxylin sheets for, 671.
—, reversible, producing, 707.
Cuirette, 363.
Cumol, 263.
Cuprammonium cellulose, 525.
—, colored, 499.
—, cottonseed hulls for, 502.
—, films and ribbons, 506.
Cupprammonium, precipitants of, 503.
—, viscosity of, 500.
Cuprammonium filaments, coagulating, 513.
—, drying, 506.
—, fineness of, 513.
—, Linkmeyer's process, 507.
—, production of, 563.
—, properties of, 501.
—, recovery of by-products from, 507.
—, washing, 503.
Cuprammonium oxide, 474.
Cuprammonium silks, 496.
—, properties, 500.
Cuprammonium solution, stability, increasing, 510.
Cupranil brown B, 548.
Cupranil brown G, 548.
Cupranil brown R, 548.
Cupric bromide, 625.
Cupric chloride, 152, 625.
Cupric compounds, cellulose solvents, 499.
Cupricellulose incandescents, 521.
Cupric iodide, 625.
Cuprous chloride, as denitrifier, 488.
Cuprous oxychloride as denitrifier, 488.
Cuprous xanthogenate, 1059.
Curcuma, 331.
Curcumine, 401.
Curriers' hard grease, 263.
Currying leather, 428.
Curved bars, celluloid covered, 651.
Cutose, 3, 4.
Cutting in celloidin, 801.
Cyanamide, 120.
Cyanin blue, 330.
Cyanine, 207, 832, 877.
Cyanosine blue, 330.
Cyclohexanol, 254.
Cyclohexene, 245.
Cyclohexanone, 254, 1011.
Cyclopentadiene, 399.
Cynae ether, 149.
Cyprian gold thread, 454.

Daguerreotypes, 873.
Damask, artificial, 421.
Dammar, 150, 253, 334, 873, 1028.
Dammara, 253.
Dark nut brown, 451.
Dawson's collodion emulsion, 893.
" Dead " cotton, 15.
Decanitrocellulose, formula of, 26.
—, formula for producing, 26.
—, per cent nitrogen in, 26.
—, solubility of, in ether-alcohol, 25.
Decapant, 1103.
Dehydration, 125.
—, acetone for, 125.
—, alcohol, Selwig & Lange method, 125.
—, centrifugal, 124, 125.
—, displacement, 126.

Dehydration, ethyl alcohol for, 125.
—, hydraulic, 127.
Dehydration of cellulose nitrate, 903.
Dehydration of pyroxylin, France's method, 602.
Dehydration, propyl alcohol for, 125.
Deltapurpurine, 371.
Deltapurpurine 5B, 549.
Denaturant for, acetic ether mfr., 1141.
Denaturant for alcohol, 1114.
Denaturant for, alkaloid mfr., 1141.
—, barometer mfr., 1127.
Denaturant, benzol as, 1127.
—, camphor as, 1127.
Denaturant for, celluloid, 1128.
—, chloral hydrate mfr., 1140.
—, confectioner's colors mfr., 1141.
—, embalming fluid, 1127.
—, ethyl chloride mfr., 1141.
Denaturants, handling of, 1118.
Denaturant for, heliotropin mfr., 1141.
—, imitation leather mfr., 1141.
—, incandescent filament mfr., 1141.
—, jewelry mfr., 1141.
—, lacquers, 1127.
Denaturants, manner of testing, 1118.
Denaturant for, medicinal extract mfr., 1141.
—, mercury fulminate, 1129.
Denaturant, methyl alcohol as, 1127.
Denaturant, for molding mfr., 1141.
Denaturant for, monobromated camphor mfr., 1141.
—, nitrous ether mfr., 1141.
—, photo engravings, 1141.
—, photo enlargements, 1141.
—, photographic collodion mfr., 1129.
—, photographic dry plates, 1127.
—, photographic prints mfr., 1141.
—, picture frame mfr., 1141.
—, podophyllum resin, 1141.
—, pyralin, 1128.
—, pyroxylin paste mfr., 1141.
—, rubber purification, 1129.
—, santonine mfr., 1141.
—, shellac varnishes, 1127.
—, shoe polish mfr., 1141.
—, soap, transparent, 1128.
—, strychnine mfr., 1141.
—, sulphonmethane, 1129.
—, surgical ligature mfr., 1141.
—, tannic acid mfr., 1141.
—, thermometer tube mfr., 1127.
—, watch mfr., 1129, 1141.
Denaturant, nicotine as, 1128.
—, special, 1126, 1139.
—, —, permit for use of, 1129.
—, storage of, 1117.
—, tobacco for, 1128.
Denatured alcohol, gauging, 1118.
—, manner of retailing, 1125.
—, permit for, 1123.
—, proof of, 1119.
Denatured alcohol, storage tanks for, 1131.
—, uses and misuses, 1122.
Denatured ethyl alcohol, 1114.
Denaturing agents, 1114.
Denier, 542.
Denitration, Chardonnet's method, 469.
—, Evers' tower, 137.
Denitration of celluloid, 622.
Denitration, pyroxylin plastics, 625.
Dentrifiers, 487.
Dense powders, 942.
—, loading, care in, 951.
—, production of, 942.
Dental compsoition, pyroxylin, antiseptic, 721.
Dental enamel, decalcification of, 809.
—, desilication of, 809.
Dental plates, 578.
—, celluloid, 719.
—, manufacture of, 575.
—, shellac, 720.
Dentistry, lacquers in, 299.
Deodorizing, artificial leather, 398.
Depilating skins, 427.
De Ronde paint remover, 264.
Designs, transferring to celluloid, 745.
" Des passementerie " industry, 1034.
Developers (photographic), 835.
Developer, collodion negatives, for, 831.
Devoe paint remover, 264.
Dextran, 1055.
Dextrane, 1055.
Dextrins, 2, 255, 260.
—, from cellulose, 7.
Dextropinene, 243.
Diacetchlorhydrin, 253.
Diacetone-arabitol, 244.
Diacetylacetic-benzylidene ether, 255.
Diallyl malonate, 399.
Dialysis, by collodion sacs, 810.
Diamant black, 834.
Diamine blue, 548.
Diamine blue black B, 548.
Diamine browns, 548.
Diamine brilliant bordeaux R, 548
Diamine catechine G, 548.
Diamine dark green, 548.
Diamine dyes, 548.
Diamine fast blue, 548.
Diamine fast red F, 548.
Diamine fast scarlet 4B, 548.
Diamine fast scarlet GB, 548.
Diamine fast scarlet GG, 548.
Diamine fast yellow FF, 548.
Diamine green, 371.
Diamine green B, 548.
Diamine orange, 548.
Diamine rose BD, 548.
Diamine rose BG, 548.
Diamine yellow CP, 548.
Diamond magenta, 548.
Diamond smokeless powder, 960.

Diamyl carbonate, 155.
Di-*n*-amyl ketone, 151.
Dianil blacks, 549.
Dianil black CB, 549.
Dianil black CR, 549.
Dianil blue, 549.
Dianil brown BD, 549.
Dianil brown 3GO, 549
Dianil brown R, 549.
Dianil claret red B, 549.
Dianil claret red G, 549.
Dianil dark blue R, 549.
Dianil dark blue 3R, 549.
Dianil direct yellow S, 549.
Dianil fast brown B, 549.
Dianil orange G, 549.
Dianil orange N, 549.
Dianil red 4B, 549.
Dianil red 10B, 549.
Dianil red R, 549.
Dianil yellow 3G, 549.
Dianil yellow R, 549.
Dianil yellow 2R, 549.
Diaspon-gelatin, 946.
Dibenzenesulfo-2.7-dioxynaphthalin, 256.
Dibenzenesulfoimid, 256.
Dibenzylbenzenesulphamid, 256.
Dibenzyl-*p*-chlorbenzenesulfanilid, 256.
Dibenzyl-*p*-toluenesulfanilid, 256.
Dibenzyl-*p*-toluenesulfoimid, 256.
Dibenzyl-*p*-toluenesulphamid, 256.
Dibenzylidene acetone, 252.
Dibornyl, 238.
Dibutyl ketone, 151.
Dichloracetates, 598.
Dichloracetic acid, 997.
Dichlorbenzol, 254.
Dichlorcresol phosphate, 254.
Dichlordiphenyl thiophosphate, 254.
Dichlorethylene, 1014.
Dichlorhydrin, 151, 254, 340, 752, 1001.
Dichlormethane, 263.
Dichlornapthhol phosphate, 254.
Dichlorphenol phosphate, 254.
Dichlorvaleraldehyde, 150.
Dicresyl carbonate, 254.
Dicresyl phosphoric acid anilid, 254.
Dicyanine, 879, 884.
Dicyanodiamide, 120.
Dicyanodiamidine, 120, 935.
Diethylamine sulphate, 1039, 1050, 1051.
Diethyl carbinol, 186.
Diethylcarbinyl acetate, 213.
Diethyl carbonate, 155.
Diethyldiphenylcarbamide, 120, 907.
Diethyldiphenyl urea, 255, 596, 597.
5-Diethyldiphenyl urea, 255.
Diethyl ketone, 151.
Diethyl monosilicate, 626.
Diethyl oxalate, 148.
Diethyl phthalate, 254.
Diethyl sebacate, 148.
Diethylsulfondimethylmethane, 259.
Diethylsulfonmethylethylmethane, 259.
Diethyl sulphate, 997.
Diffusion phenomena, collodion in, 812.
Diglycerol, 947.
Diglycose, 998.
Di-heptadecyl ketone, 151.
Dihydroxybutyric acid, 53.
Dihydroxydinaphthyl ketone, 254.
Dihydroxydiphenylsulphone, 252, 255.
Di-iodofluorescin, 878.
Dimethylacetal, 182.
Dimethylaniline chloride, 193.
Dimethyl-*l*-acetone, 152.
Dimethylamine, 240.
Dimethylamine chloride, 994.
Dimethylamine sulphate, 994.
Dimethylethylcarbinol, 186.
Dimethylhydroquinone, 258.
Dimethyl ketone, *see* acetone.
Dimethylphenylpyrazolon, 258.
Dimethylpyridine, 181.
Dimethyl sulphate, 239, 998, 1039.
Dinaphthyls, 255.
Dinaphthyl carbonate, 254.
Dinaphthyl ketone, 254.
Dinaphthyl phosphoric acid anilid, 254.
Dinitroacetin, 158.
Dinitrobenzene, 149, 411, 962.
Dinitrocellulose, 25, 27.
—, formula of, 26.
—, per cent nitrogen in, 26.
Dinitro-*o*-cresol, 328.
Dinitrodiglycerol, 947.
Dinitroglycerol, 947.
Dinitromonacetins, 151.
Dinitromonochlorhydrin, 208, 947.
Dinitronaphthalin, 154.
Dinitrotoluene, 356, 947.
Dinitrotoluol, 258.
Dinitroxylols, 258.
Dioptichrome process, 880.
Dioxydiphenylsulphone, 259.
Dioxynaphthyl ketone, 254.
Dioxynaphthylmethane, 519.
Dipentene, 236.
Diphenylamine, 121, 193, 556, 595, 907, 976.
—. estimation of, 977.
Diphenylamine reagent, 72.
Diphenyl carbonate, 254.
1:4-diphenyl-3:5-endoanilo-4:5-dihydro-1:2:4-triazole, 768.
Diphenylhydrazine, 207.
Diphenyl phosphoric acid anilide, 254.
Diphenyl phthalate, 253.
Diphenylsulfon, 259.
s-Diphenylthiocarbamide, 259.
Diphenyl urea, 255.
Dip lacquers, *see* Lacquers, dip.
Dipropyl ketone, 151.
Direct brown M, 548.
Direct dipping process of nitration, 84.

Direct gray B, 549.
Direct gray R, 549.
Direct green, 371.
Direct green B695, 548.
Direct orange GR, 548.
Direct positives on glass, 873.
Direct saffranine GB, 548.
Direct sky blue, 548.
Dishes, celluloid for, 727.
Displacement nitration, 96.
Displacement dehydration, 126.
Distilleries, classification of, 1120.
—, kind of spirits made at, 1120.
—, survey of, 1118.
—, capacity of, determining, 1119.
Di-*p*-sulfo-2.7-dioxynaphthalin, 256.
Dithiocarbonate, 1059.
Dixanthogen, 1059.
Documents, lacquering, 321.
—, protecting with pyroxylin, 321.
Dodecanitrocellulose, formula of, 26.
—, per cent nitrogen in, 26.
Doll's celluloid, 928.
—, —, producing hair on, 728.
Dolls' heads, celluloid, 729.
—, —, making, 633.
—, viscoid, 1098.
Dolomite, 221.
Door knobs, celluloid-coated, 656.
" Dope," 387.
Doru distillation apparatus, 181.
Dowels, enameling, 347.
Dragon's blood, 329, 331.
Drenching skins, 427.
Dress shields, preparing, 417.
Driers, 446.
Drosophor humidifier, 509.
Dry plate, uses for, 827.
Drying cotton, 82.
Drying, films, 863.
Dryobalanops aromatica, 236.
Dryobalanops camphor, 236.
Dualine, 946.
Dufay dioptichrome process, 880.
Duplex collodion, 823.
Duplicate sound record, celluloid for, 734.
Duroid, 673.
Dutch gold, 313.
Du Vivier Silk, 479.
Dyeing artificial fibers, 543.
Dyeing cellulose acetate, 1023.
Dyeing, pyroxylin plastics, 679.
—, starch acetate in, 1009.
Dyeing viscose, 1091.
Dynamite guncotton, 945.

E. C. powder, 959.
—, heat test for, 980.
E. C. Improved powder, 960.
E. C. No. 1, 2, or 3, powder, 960.
E. C. Improved Shotgun Smokeless powder, 955.
Earings, celluloid inlaid, 698.
Ears, artificial, celluloid, 729.
Eau de Javelle, 810.
Ebony finish, 344.
Ebony plastic masses, 736.
Eburite, 749.
Eclipse paint remover, 264.
Edinol, 835, 876.
Eel-skin in celluloid cuff mfr., 703.
Egg albumen, 268.
Eggs, coating with pyroxylin, 325.
Egg spoons, imitation horn, 682.
Egyptian cotton, *see* cotton, Egyptian.
Eiderdown, imitating, 411.
Elastic collodion, 817, 823.
Electric filaments, viscose, 1099.
Electric-light bulbs, etching, 342.
Electric-light filaments, 357, 507, 520.
Electric-light globes, lacquering, 340.
Electrine, 343.
Electrozinc, 347.
Elemi, 429, 1028.
Elephant hide, imitating, 395.
Elgin marble, imitating, 693.
Embalming fluid, denaturant in, 1127.
Embalming fluids, denaturant in mfr. of, 1141.
Embedding cotton, 795.
Embedding in celloidin, 797.
Embossing, 390.
Embossing celluloid, 678.
Embossing leather, 440.
Embryos, celloidin impregnation of, 797.
Emerald green, 330.
Emery paper, producing, 404.
Emery wheel, celluloid, 730.
Emery wheels, producing, 404.
Empire powder, 952, 961.
Empire Smokeless Shotgun powder, 956.
Emulsion, see collodion, etc.
—, collodion with, 814.
Enamel cloth, making, 421.
Enamel collodion, 844.
Enamel collodion glazing process, 893.
Enamel, imitation champlevé, 697.
—, imitation cloisonné, 697.
Enameled paper, 418.
Enamel leather, 425.
Enamel leathers, 432.
Enamels, 332.
—, wood, 346.
Enanthic acid, 177.
Encrustic pyroxylin plastics, 698.
" Encrusting substances," 17.
Endecanitrocellulose, formula of, 26.
—, per cent nitrogen in, 26.
Endotryptase, 194.
Engraved plate printing on celluloid, 743.
Engravings, lacquering, 321.
Enneanitrocellulose, formula of, 26.
—, insolubility in ether-alcohol, 25.
—, per cent nitrogen in, 26.

Enzymes, inactivity of, in contact with collodion, 814.
Eos, 877.
Eosine, 330, 690, 832, 879.
Epichlorhydrin, 340, 491, 752, 1001, 1017, 1021.
Epispastic collodion, 816.
Equisetum, silica in, 5.
Erco spirits, 272.
Erdmann float, 65.
Erika, 371.
Eriocyanine, 547.
Erioglaucine, 451, 547.
Errata, 1148.
Erythri-diformal, 244.
Erythrolitmin, 690.
Erythrosine, 330, 690, 832, 877.
Esculapius weed, nitration of, 59.
Esparto, nitration of, 61.
Esparto grass, nitration of, 59.
Etchings (steel, and copper), lacquering, 334.
Ethane, chloro derivatives of, 172.
Ethenyltrichloramidin, 250, 252, 255.
Ethenyltetrachloramidin, 250.
Ethenyl trichloride, 171.
Ether, 167.
—, condensation of, 483.
—, flash point of, 1144.
Ether glue, 37, 144, 749.
Ether, purity of, 42.
—, recovery of, apparatus for, 781.
Etherized oil, 146.
Ethoxalyl diamine, 250.
Ethylacetanilide, 252, 258.
Ethyl acetate, 149, 229, 405, 434, 673, 902, 1022.
—, flash point of, 1144.
—, manufacture of, 230.
Ethyl acetoacetate, 153.
Ethyl acetone, *see* methylpropyl ketone.
Ethylaceto-*o*-nitrochloranilide, 255.
l-Ethylacetylamido-2-nitro-3.4.6-trichlobenzene, 250.
Ethyl alcohol, *see* alcohol.
—, 182.
—, amount in grain, 1119.
—, completely denatured, 1114, 1122.
—, denatured, 1114.
—, —, gauging, 1118.
—, flashpoint of, 1144.
—, specially denatured, 1122.
—, weighing of, 1121.
Ethylamine, 240.
Ethyl benzoate, 155, 1003.
Ethyl blue, 330.
Ethyl-benzoyl-*o*-toluidine, 1034.
Ethylbenzoyltrichloranilide, 255.
Ethylbutyl ketone, 152.
Ethyl butyrate, 147, 227, 265.
Ethyl carbanilate, 259.
Ethyl carbolate, 267.
Ethyl chloride, 154, 171.
Ethyl chloride, denaturant in mfr. of, 1141.
—, flash point of, 1144.
Ethyl cresylate, 267.
Ethyl disilicate, 626.
Ethyl $\alpha\beta$-dithiocarbonate, 1059.
Ethyl enanthate, 177.
Ethylethenyltrichloramidin, 250, 255.
Ethylethenyltrichlor-*o*-phenylenediamine, 255.
Ethyl formate, 147, 148, 187.
Ethyl green, 207, 330.
Ethylhexyl ketone, 151.
Ethyl*iso*amyl ether, 157.
Ethyl*iso*butyl ether, 157.
Ethyl*iso*valerate, 147.
Ethylmethyldiphenylcarbamid, 907.
Ethylmethyl ketone, flash point of, 1144.
Ethyl nitrate, 53.
Ethyl nitrite, 53.
—, flash point of, 1144.
Ethyl orthoformate, 147.
Ethyl oxalic acid, 148.
Ethylpentyl ketone, 151.
Ethyl phthalate, 256, 421.
Ethyl propionate, 231.
Ethyl *n*-propylacetoacetate, 186.
Ethylpropyl ketone, 151.
Ethyl salicylate, 147, 155.
Ethyl sebacate, 148, 253, 417, 718.
Ethyl silicate, 307, 491.
Ethyl stearate, 253.
Ethyl succinate, 256.
Ethyl sulphate, 150.
Ethyl sulphuric acid, 472.
Ethyl *p*-toluene sulphethylanilid, 254.
Ethyl toluenesulphonate, 1021.
Ethyl *p*-toluene sulphonate, 254.
Ethyl valerate, 147, 265.
Ethyl *n*-valerate, 186.
Ethyl violet, 548, 832, 834.
Ethylene, chloroderivatives of, 172.
Ethylene diacetate, 251.
Ethylidene diacetic ester, 254.
Ethylidene glycol ether, 244.
Ethylidene urethane, 259.
Eubornyl, 247.
Eucalyptol, 149, 1034.
Eugenol, 149, 236, 399, 802.
Eureka paint remover, 264.
Evers' denitration tower, 137.
Exalgine, *see* methylacetanilide.
Exhilarative solvent, 146.
Explosion test, 973.
—, U. S. Ordnance standards for, 974.
Explosive D, 941.
Explosives, ammonium nitrate, 951.
Explosive cotton, 37.
Explosive gelatin, exudation test of, 984.
—, freezing of, prevention, 947.
—, liquefaction test of, 984.
—, testing, 983.
Explosives, firing point of, 982.

Explosive mixing machine, 781.
Explosive mixtures, evaporating, 781.
Explosives, graining, apparatus for, 781.
Explosives, moisture in, determination of, 983.
—, storage of, construction of buildings for, 943.
—, testing stability of, 968.
—, transportation of, 1142.
—, waterproofing with celluloid, 939.
Exudation test, explosive gelatin, 984.
Eyeglass frames, celluloid, 641.
Eyelets, celluloid, 735.
Eyes, embedding in celloidin, 799.

Fabrics, coating with pyroxylin, 421, 575.
—, finishing with nitrocellulose, 1023.
—, lisle thread finish to, 524.
Fabrikoid, 370.
Fab-Ri-Ko-Na, 418.
Factis, 406.
Factitious, *see* Imitation.
Fans, celluloid inlaid, 698.
Fast acid violet, 547.
Fast acid yellow, 451.
Fast benzo rose, 548.
Fast brown, 451.
Fast green, 371, 548.
Fast green I, 548.
Fast green JJO, 548.
Fast green O, 548.
Fast red A, 451.
Fast yellow dye, as denaturant, 1128.
Fat liquoring, 451.
Faultless paint remover, 264.
Feathers, artificial, 410.
—, preserving, 399, 410.
Feculose, 1008, 1009.
Fehling's solution, 7, 33.
Felixite powder, 962.
Felt, manufacture of, 508.
Fenchone, 236, 937.
Ferric bromide, 625.
Ferric chloride, 152, 625.
Ferric ferrocyanide, 446.
Ferric iodide, 625.
Ferric iron mordants, 11.
Ferric phosphate, 628.
Ferrocyanides as dentrificrs, 488.
Ferrotypes, 873.
—, cleaning, 874.
Ferrotype collodion, 892.
Ferrotype, developing, 875.
Ferrotype plates (gelatin), 876.
Ferrotypes, preservatives for, 875.
—, varnishing, 876.
Ferrous chloride as denitrifier, 487.
Ferrous salts as denitrificr, 488.
Ferrous sulphate, 674.
Ferruginous collodion, 823.
Festooning machine, 380.
Fiberloid, 38, 748.
Fibrin filaments, 1084.
Fibroin, 472, 1004.
Fibrol, 1103.
Fibroleum, 363.
Fibrolithoid, 748.
Fibro-silk, 459.
Fibrous materials, covering with celluloid, 640.
Field's lacquer experiments, 303.
Filaments, artificial, *see* Artificial filaments.
—, cuprammonium, 781.
—, incandescent, 520.
—, viscose, 1099.
Filite, 621, 927.
Films, analysis of, 897.
—, band supports, utilizing, 863.
—, base, producing, 842.
—, cinematograph, perforated, drying, 781.
—, "cockling," preventing,860.
—, collodion, Crane process, 840.
—, —, Eastman Kodak process, 840.
—, —, manufacture, 839.
—, —, non-inflammable, 842.
—, —, opaque to X-rays, 840.
—, —, Patat's formula, 840.
—, —, Reichenbach process, 839.
—, —, Swan and Leslie process, 840.
—, —, Todd's process, 840.
—, color of, determining, 896.
—, continuous, 845.
—, —, coating with emulsion, 863.
—, —, drying, 863.
—, —, producing by coagulation, 862.
—, —, sensitizing, 865.
—, cutting, in continuous lengths, 862.
—, denitrated pyroxylin, 843.
—, drying, 866.
Film drying machine, 781, 849.
Films, elongation of, determining, 896.
Film enamel, de Montlord's, 434.
Film, "enlargement" of, 843.
Films, fireproof magazine for, 892.
—, inflammability, reducing, 843.
—, joining, 860.
—, metallized, forming, 886.
—, N. C., 844.
Film negatives, 844.
Film, negative, removing, 843.
Film negatives, storage of, 845.
Films, neutral, producing, 853.
Film, nitrocellulose, 781.
Films, non-curling, 844.
—, opaque, producing, 669.
—, particles in, determining, 896.
—, perforated, coating, 863.
—, photographic, explosion of, 891.
—, —, inflammability of, 891.
—, —, self-detaching, 844.
—, physical testing of, 894.
—, "pitting" of, overcoming, 848.
—, producing, Bolas process, 842.

Films, producing, Smith's process, 842.
Film, raw, 866.
Films, repolishing scratched, 862.
—, scratched, repolishing, 862.
—, seasoning, determination of degree of, 897.
—, sensitized, lacquering, 844.
—, sticking together, 870.
—, storage of, dangers in, 892.
—, tensile strength of, 895.
—, testing of, 894.
—, thickness of, determining, 895.
—, waste from, utilizing, 862.
—, waterproofing, 862.
Filter paper, Swedish, 5.
Filter papers, nitrated, 72.
Filter screen, for nitrocotton pulping, 946.
Finishing powder press, 918.
Finishing press, 915.
Finish remover, 781.
Fir balsam, *see* Balsam of fir.
Fish lines, coating of, 523.
Fish skins, coating, 453.
Fish skin, in celluloid cuff mfr., 703.
Fismes silk, 479.
—, microscopy of, 550.
—, strength, 1035.
Flameless powders, 901.
Flammivore powder, 964.
Flash-light composition, 968.
Flash point of inflammable liquids, 1144.
Flavine, 331.
Flax, cotton compared with, 40.
Flax fiber, nitration of, 61.
Flax, nitration of, 59, 78.
Fleshing skins, 427.
Flexile collodion, 817.
Flexible collodion varnish, 893.
Flour, 260.
Floor lacquers, 351.
Fluid belladonna plaster, 823.
Fluid skin, 749, 824.
Fluids, electrical dispersion of, 539.
Fluorides, solubility of, in alcohol, 154.
Fluoroscope, preparing dichroic luminescent for, 733.
Foil, artificial, 524.
Foreite, 949.
Fördit, 949.
Forks, celluloid inlaid, 698.
Formaldehyde, 517, 537, 538.
Formaldehyde as denitrifier, 489.
Formaldehyde-gelatin, 843.
Formaldehyde-phenol compounds, 758.
Formalin, *see* formaldehyde.
Formanilide, 252.
Formic acid, 53, 260, 270, 988, 1005, 1007.
—, as fibroin solvent, 1004.
Formic collodion, 358.
Formic ether, *see* ethyl formate.
Formol-albumen celluloid, 761.
Formyl diamine, 250.
Formyldiphenylamine, 249.
Formyl hydrazine, 832, 842.
Formyl violet, 451.
Frankfurt artificial silk, 460.
Franklinite, *see* zinc carbonate.
French bedstead lacquers, 338.
French cleaning, starch acetate in, 1009.
French mixtion, 423.
Friable cottons, 28, 38.
Friedrich spinning apparatus, 541.
Frigusin, 823.
Frost on window panes, preventing, 208.
Frosted silver finish, 313.
Frostine, 343.
Frosting, 342.
Frosting, on glass, producing, 342.
Fruit, coating with pyroxylin, 325.
—, fermentable matter in, 1120.
Fuchsine, 330, 343, 396, 451, 801, 1024, 1025.
Fuchsine reagent, 33.
Fulgenic acids, 878.
Fulgides, 878, 879.
Fulminating powder, 17.
Fume tests, 968.
Fungicides, 327.
Fungiformis, 362.
Furfural, determination of, in amyl alcohol, 212.
Furfuroids, 190.
Fur, preserving, 399.
Furs, coating of, 452.
—, imitation, 408.
Fur tails, artificial, 409.
Fusel oil, *see also* amyl alcohol.
—, 174, 262, 448.
—, American, 201.
—, —, composition, 180.
—, —, testing of, 209.
—, amount produced, 201.
—, analysis of crude, 208.
Fusel oil C. P., 201.
Fusel oil, calcium chloride test, 210.
—, classification for duty, 200.
—, composition of, 176.
—, —, from Cognac, 179.
—, corn, composition of, 180.
—, determining in lacquers, 359.
—, discovery of, 174.
—, duty on, 200.
—, excise test for, 200.
—, expansion by heat, 188.
—, grades of, 201.
—, history of, 174.
—, lower alcohols, Government test, 209.
—, occurrence of, 176.
—, petroleum in, 181, 212.
—, potato, composition of, 178, 179, 180.
—, purification of, for toxicological work, 201.
—, recovery of, from casks, 216.
—, rectification, 201.

Fusel oil, rectification, amyl alcohol fraction, 204.
—, —, bottoms, 205.
—, —, Field's process, 206.
—, —, first runnings, 203.
—, —, second fraction, 204.
—, —, yields, 205.
—, " rectified," 201.
—, refined, limits of moisture in, 211.
—, water, removal of, from, 202.
—, synthetic, 189.
Fusel oil tester, U. S. Government, 209.
Fusel oil, testing, Allen's method, 200.
—, toxicity of, 200.
—, Ulex test for, 200.
Fuses, waterproofing with pyroxylin, 326.
Fustic, 331.

Galalith, 763.
Gallacetophenon, 252.
Gallic acid, 885.
Gamboge, 329, 331.
Garcinia hanburii, 331.
Gas mantles, 352.
Gasolene, flash point of, 1144.
Gas volumes, temperature corrections for, 1146.
Gas-volumeter, 66.
Gatling gun, 898.
Gelatin, 268, 400, 479.
Gelatin, blasting, 946.
—, dyeing of, 517.
Gelatin dynamite, 946.
—, testing, 983.
Gelatin films, 1020.
Gelatin, iridescent preparing, 325.
Gelatin (explosive), mixing machines for, 946.
Gelatin silk, 516.
—, microscopy of, 550.
Gelatinous collodion, 823.
Gelignite, 946, 948.
Geloxite, 949.
Geranine, 548.
Geranine G, 1031.
Geraniol, 148.
Gerber butryometer, 212.
Gerber's fat determination, 212.
German flake powder, 901.
German test at 135°, 971.
Gezow's corn collodion, 823.
Ghatti, 341, 400.
Gilded lace, *see* lace, gilded.
Gilding medium, 308.
Gillmore stuffing machine, 638.
Gilson's rapid process, celloidin sections, 804.
Gilt paper, producing, 419.
Givet silk, 497, 501.
Glanzstoff, 561.
Glanzstoff hats, 549.
Glanzstoff silk, 501.
Glass, adhesive for, 574.
—, cleaning, 833.
—, coating with collodion, 833, 834.
—, frosted, producing, 342.
—, images on, reproduction of, 885.
—, leaded, celluloid imitation of, 675.
Glass positives, 873.
Glass, spun, 454.
Glass tubing, lining with celluloid, 646.
Glass wool, 454.
Glazing powder, 925.
—, du Pont method, 925.
Gliadin, 749.
Globes, lacquering, 338.
Glonoin, *see* nitroglycerol spirits.
Glonoin, transporting, 1145.
Gloria, 414.
Glorid, 751.
Glossy paper emulsion, 893.
Glucose, 255, 260, 503.
d-Glucose, 986.
Glucose, as viscose coagulant, 1063.
Glucose diacetate, 256.
Glucose dibutyrate, 256.
Glucose distearate, 256.
Glucose ditartrate, 256.
Glucose, from cellulose, 7.
Glucose octa-acetate, 256.
Glucose tetracetate, 256.
Glucose tetratartrate, 256.
Glucose triacetate, 256.
Glue, 485.
Glue silk, 516.
Glutaminic acid, 194.
Gluten-fibrin, 749.
Glycerized collodion, 819.
Glycerol acetates, 151, 741, 1011.
Glycerol benzoate, 256.
Glycerol monobenzoate, 151.
Glycerol monoölcate, 151.
Glycerol oleoacetates, 151.
Glycerol acetoölcates, *see* Glycerol oleoacetates.
Glyceryl cresyl-*p*-toluene sulphonate, 254.
Glycin, 834, 875, 876.
Glycocoll, 193.
Glycolignose, 4.
Glyoxiline, 945.
Goffered cellulose films, 781.
Gold, depositing on celluloid, 719.
Goldbeaters' skin in celluloid cuff mfr., 703.
Goldbeaters' skin permeability of, 813.
" Gold " lacquers, 330.
Gold leaf, imitation, 312.
—, nitrocellulose, 781.
Gold threads, 454.
Golden sulphuret of antimony, 369.
Golf balls, celluloid, 724.
—, coating, 349.
—, —, Hammond process, 349.
Gooseberry essence, 227.

Gorgonia corals, 690.
Gorse, artificial, 521.
Gorse, nitration of, 60, 61.
Gossypium, 11.
Gossypium barbadense, 12, 14.
Gossypium herbaceum, 14.
Gossypium hirsutum, 12, 14.
Gossypium indicum, 14.
Gossypium peruvianum, 14.
Government test, for alcohols in fusel oil, 209.
Grain, amount ethyl alcohol from, 1119.
" Grain " ivory, imitating, 683, 686.
Graining press, 920.
Gramophone records, celluloid, 734.
Granulobacter butylicum, 190.
Grapes, fermentable matter in, 1120.
Graphite, 416.
—, in smokeless powder, 925.
Graphophone records, celluloid, 734.
Gray B, 548.
Gray BB, 548.
Gray R, 548.
Grege silk, 470.
Grisoutine B, 949.
Grisoutine BG, 949.
Grisoutine G, 949.
Grisoutine GG, 949.
Griotte marble, imitating, 692.
Ground glass, producing images on, 886.
Guaiac, 150.
Guancide, 749.
Guanidine nitrate, 935.
Guinea green, 451.
Gums, 305.
Gum arabic, *see* Acacia.
Gumdrops, cellulose acetate in, 1010.
Gum lacquers, 334.
Gum resins, 334.
Gums, starch acetate substitute for, 1010.
Gun cotton, 37.
Gun cotton blocks, 965.
—, pressing of, 911.
—, testing, 966.
Guncotton, compression into cartridges, 965, 966.
Guncotton dynamite, 945.
Guncotton, early mfr. of, 75.
—, heat test for, 980.
—, nitrated, 900, 950.
—, picric acid with, 967.
—, preparing nitrate lower than, 24.
Guncotton press, 966.
Guncotton, Schonbein's Eng. patent, 568.
—, U. S. Navy torpedo, 967.
Gunpowder, ammonium nitrate in, 899.
—, comparison with cellulose nitrate, 901.
—, composition of, 898.
—, smoke from, 899.
Gutta percha, 269.
Gutta-percha substitutes, 411.
Guttman stability test, 969, 976.

Hair, artificial, 521.
—, celluloid, 718.
Hale's lacquer process, 301.
Half-tone iodized collodion, 893.
Half-tone work, collodion in, 887.
Hand-bag exteriors, viscoid, 1097.
Hand nitration, 86.
Handle, artificial horn, 688.
—, celluloid coated, 656.
—, celluloid, manufacture, 633.
—, covering with celluloid, 641.
—, lacquering, 337.
Hardening specimens by freezing, 801.
Hargreaves and Rowe method, estimating mercuric chloride, 973.
Harness buckles, celluloid covered, 651.
Haskell finishing process, 681.
Hat bands, *see* Hat sweats.
Hats, imitation, 571.
Hat-racks, enameling, 347.
Hat-shapes, finishing with nitrocellulose, 1023.
Hats, stiffening, 346.
Hat sweats, preparing, 438.
Hat trimmings, 525.
Hats, waterproofing, 346.
Hawksbill turtle, 689.
Hazard Shotgun Smokeless powder, 955.
" Heal All " collodion, 823.
Heal-m-all, 824.
" Heal Skin " collodion, 824.
Heat tests, 968.
—, masking, 970, 971.
Heat test with KI-starch paper, 970.
Heavy nitrobenzol, 168.
Heavy solvol, 156.
Heel, celluloid covered, 735.
Hefner photometric lamp, 213.
Heiderstadt collodio-chloride process, 837.
Heliotropin, 149.
—, denaturant in mfr. of, 1141.
Hemicelluloses, 7.
Hemostatic collodion, 820.
Hemp, artificial, 521.
—, —, producing, 1084.
—, nitration of, 61, 78.
Henckel-Donnersmarck silk, 1034.
Henrite, 962.
Heptanitrocellulose, formula of, 26.
—, per cent nitrogen in, 26.
Heptasaligenosaligenin, 758.
Heptylic acid, 1007.
Hercules gelatin, 949.
Hess stability test, 969, 977.
Hexachlorethane, 171, 989.
Hexaethyl disilicate, 626.
Hexahydrobenzylketone, 253.
Hexamethyl violet, 408.

Hexanitrocellulose, 25.
—, formula of, 26.
—, per cent nitrogen in, 26.
Hexanitrostarch, 56, 57.
Hexenoic acid, 1007.
Hexoses, nitric acid esters of, 58.
Hexyl alcohol, 177, 187.
Hexyl angelate, 149.
Hexyl tiglate, 149.
Hides, 426.
—, splitting of, 435.
Hippopotamus hide, imitating, 395.
Hippuric acid, 193.
Histocotton, 795.
Histology, cellulose nitrate in, 793.
Hods, lacquering, 344.
Hoffman's ether, 325.
Hoitsema test, 959.
Hollow articles, celluloid, lining, 645.
—, —, manufacture, 633.
—, —, Thurber process, 644.
—, —, Ward's process, 642.
—, viscose, 1099.
Hollow ware, celluloid coated, 659.
Holtz static machine, 540.
Homocol, 832, 834.
Homosaliretin, 758.
Horn, artificial, 687.
—, nitration of, 61.
—, viscose substitute for, 1107.
Horny materials, nitration of, 60.
Horsehair, artificial, 505.
—, —, uses, 525.
—, natural, 521.
Horsehair seatings, producing, 414.
Hosiery, printing "polkadot" on, 741.
Horsley apparatus, 982.
Hospital sheeting, producing, 388.
Hotchkiss gun, 898.
Human hair, artificial, 524.
Human spleen, cellulose in, 1.
Humidifier, 509.
Hyatt gun method, 726.
Hyatt's sheeting patent, 668.
Hydracrylic acid, 597.
Hydralcellulose, 990.
Hydrate cellulose, 1041.
Hydraulic nitrocotton press, 128.
Hydraulic press, Hollings, 965.
Hydrazine, 327.
Hydrazine phosphite, 832, 841.
Hydrazine sulphate, 841.
Hydrazine sulphite, 832, 841.
Hydrocellite, 629.
Hydrocellulose, 6, 118, 761, 986, 992, 1027, 1038, 1039, 1040, 1041, 1046.
Hydrocellulose acetate, 996, 1017, 1022, 1038, 1040.
—, analysis of, 1036.
—, damask effects with, 1022.
Hydrocellulose acetate lacquers, 1027.
Hydrocellulose acetate plastic, 1018.
Hydrocellulose acetate, printing on textiles with, 1022.
Hydrocellulose, acetylation of, 1037.
Hydrocellulose and iodine, 6.
Hydrocellulose diacetate, 1042.
Hydrocelluloses, difference between cellulose hydrates, 7.
Hydrocellulose formate, 1004.
Hydrocellulose, from cellulose, 6.
Hydrocellulose nitrates, 33, 34, 1027.
Hydrocellulose, nitrates of, 61.
—, preparation of, 6.
—, reactivity of, 6.
Hydrocelluloses, hydrogen dioxide, 34.
—, sulphuric acid, 34.
Hydrocellulose triacetate, 1042.
Hydrocellulose, Wirth's method of producing, 77.
Hydrogen dioxide, bleaching by, 585.
Hydronaphthyl ketones, 253.
Hydroquinone, 517, 764.
Hydroxylamine, 841.
o-Hydroxphenylethyl alcohol, 196.
Hydroxylamine, 327.
β-Hydroxynaphthoic acid, 308.
Hydroxypropionic acid, 597.
Hydroxypyruvic acid, 2, 53.
"Hygienic" underwear, 17.
Hygroscopic moisture constant, 47.

Ichthyol, 327.
Ilges distillation method, 181.
Images, reproduction of, 885.
Imitation alabaster, 693.
Imitation alligator hide, 395.
Imitation amber, 691.
Imitation bear skin, 409.
Imitation beaver fur, 408.
Imitation Brussels carpet, 422.
Imitation cedar wood, 415.
Imitation champlevé enamel, 697.
Imitation cloisonné enamel, 697.
Imitation cocabola wood, producing, 348, 351.
Imitation coral, 749.
Imitation cork, 406.
Imitation crepe, producing, 327.
Imitation damask, 421.
Imitation draperies, viscose for, 1107.
Imitation ebony, staining, 351.
Imitation eider down, 411.
Imitation elephant hide, 395.
Imitation felt goods, 366.
Imitation, flannel, Canton, 404.
Imitation flannel goods, 366.
Imitation furs, 408.
Imitation gold leaf, 312.
Imitation hippopotamus hide, 395.
Imitation horse-hair, viscose, 1089.
Imitation ivory, 682.
—, producing, 348.
Imitation leather, denaturant in mfr. of, 1141.

Imitation leather, viscose for, 1103.
Imitation lithographic stone, 745.
Imitation mahogany, staining, 351.
Imitation marble, 691.
—, producing, 348.
Imitation mohair, 404.
Imitation monkey skin, 395.
Imitation mosaic, 695.
Imitation mother-of-pearl, 311.
Imitation nutria, 408.
Imitation onyx, 693.
—, producing, 348.
Imitation pearl, 682, 690.
Imitation rhinoceros hide, 395.
Imitation rosewood, staining, 351.
Imitation shellac, 340.
Imitation silver leaf, 312.
Imitation textiles, 421.
Imitation tortoise shell, 689, 794.
Imitation velour, viscose for, 1107.
Imitation velvet, viscose for, 1107.
Imitation woolen goods, 366.
Imitation woven fabric, 408.
Immedial dyes, 1111.
Incandescent bulbs, etching, 342.
Incandescent filaments, 520.
Incandescent mantles, 521.
Incrustations, bronze, 698.
—, gold, 698.
—, mfr. of, 689.
—, metallic, 698.
—, silver leaf, 698.
Indazine M, 548.
Indene, 399.
Independent blasting gelatin, 949.
Indian cotton, *see* Cotton, Indian.
Indian Head Powder Factory, 938.
Indian yellow R, 451.
India-rubber substitutes, 411.
Indigo, 331.
Indoin blue, 545.
Indurite, 900, 902, 938.
Infallible Shotgun powder, 952.
Infallible Smokeless powder, 955.
Inflammability of films, 891.
Inflammable liquids, flash point of, 1144.
—, labeling, 1145.
Inflammables, transportation of, 1142.
Inflammation, collodion for, 825.
Ink, for writing on celluloid, 740.
—, marking, viscose for, 1108.
—, printing on pyroxylin with, 151.
—, pyroxylin printing, 325.
Inlaying celluloid, 698.
Insecticides, 415.
—, in pyroxylin, 452.
Insects, tunicin in, 1.
Insignias, producing on leather, 395.
Insoluble nitrocellulose, determination in cellulose nitrate, 972.
Inspecting machine, for cloth, 375.
Instint paint remover, 264.
Insulation of wire, by cellulose acetate, 1029.
Insulator, celluloid, 698.
Intensification, 871.
Intensification of slides, 871.
Inulin, 2.
Iodides, solubility of, in alcohol, 154.
Iodine green, 146, 330.
Iodine violet, 146.
Iodinal collodion, 823.
Iodized collodion, 823, 838.
—, uses, 824.
Iodized negative collodion, 838.
Iodoform, 327, 388, 819.
Iodoform collodion, 819.
—, uses, 824.
p-Iodophenylalanine, 197.
Iodosulphural collodion, 823.
Iridescent scales, producing, 327.
Irisamine, 549.
Irisamine G, 548.
Irish moss, 261.
Iron developer, in photography, 831
Iron lactophosphate, 599.
Iron ware, coating, 344.
Isinglass, 414.
*Iso*amyl decoate, 177.
*Iso*amylideneacetoacetic ether, 150.
*Iso*amylidene-*m*-amidobenzoic acid, 1150.
*Iso*borneol, 250.
*Iso*borneol acetate, 239.
*Iso*borneol butyrate, 240.
*Iso*borneol propionate, 240.
*Iso*bornyl acetate, 242, 250.
*Iso*bornyl benzoate, 251.
*Iso*butyl alcohol, 185, 301.
*Iso*butyl carbinol, 186.
*Iso*butylene oxide, 187.
*Iso*chromatic collodion emulsion, 877.
*Iso*col, 884.
*Iso*eugenol, 149. 399.
*Iso*leueine, 193.
*Iso*propyl alcohol, 184, 301.
*Iso*propyl benzoate, 184.
*Iso*saccharinic acid, 53.
*Iso*safrol, 399.
*Iso*valeric aldehyde, 150.
Itaconic acid, 878.
Ivory, definition of, 682.
—, factitious, 682.
—, imitating grain, 683.
—, imitation, 682.
—, imitation, producing, 348.
Ivoirine, 750.
Ivorine, 750.
Ivoryine, 750.

J. Powder, 962, 963.
J. B. powder, 960.
J. B. Smokeless powder, 900.
Janus black, 545.
Janus blue R, 545.

Janus brown, 330.
Janus dyestuffs, 545, 547, 548.
Janus green, 371.
Japan, 344.
Japan wax, 262, 734.
Japanese camphor, 236.
Japanese gold paint, 308.
Japanese leaf, 312.
Japanese smokeless powder, 965.
Jargonelle pear, odor, 188.
" Jelly," 387.
Jet, artificial, producing, 344.
Jewel, 264.
Jewel boxes, celluloid, 642.
Jewels, mounting in celluloid, 715.
Jewelry, celluloid inlaid, 698.
—, denaturant in mfr. of, 1141.
Jujubes, cellulose acetate, in, 1010.
Jute black GN, 548.
Jute black N, 548.
Jute black V, 548.
Jute nitrate, *see* nitro-jute.

Kamptulicon, 413.
Kaposi's Wart Collodion, 820.
Katigen dyes, 1111.
Kauri, 253.
Kelly's collodion paint, 819.
Kennedy's bunion cure, 820.
Keratin, 323.
Keretol, 370.
Kerite, 363.
Ketohexane groups, 5.
Ketones, 151.
Ketoses, 58.
King's CG powder, 956.
King's FG powder, 956.
King's FFG powder, 956.
King's FFFG powder, 956.
King's FFFFG powder, 956.
King's G powder, 956.
King's Semi-smokeless powder, 956.
Kips, 426.
Knife handles, imitation horn, 682.
—, viscoid, 1097.
Knöfler mantle, 357.
Kron's nitration process, 90.
Krystalline, 301.
Kynoch gelignite, 948.
Kynoch's Smokeless powder, 951.

LX9, 203, 226.
LX10, 203.
Labels, pyroxylin, 747.
Lac, 331.
Lace, artificial, 524.
Lace fabric, imitation, 423.
Lace, gilded, preparation of, 311.
Laces, 524.
Lacquer, *see* pyroxylin lacquers.
—, acetate, 1027.
—, acetone oil, 303.
Lacquer, acid-resisting, 761.
Lacquer, amyl acetate, 304.
—, Bolton's, 303.
—, brass, 306.
—, bronzing, *see* bronzing liquids.
—, brush, 306.
—, Chinese, 305.
—, classification, of 305.
—, denaturant in, 1127.
—, dip, 305.
—, equilibrium of fluids in, 307.
—, Ferner's, 304.
—, fish scale, 312.
—, formula for, Boltons', 303.
—, Goldsmith's, 304.
—, gum, 305.
—, Hale's, 302.
—, inflammability of, 307.
—, Japanese, 305.
—, mica (Tiller), 312.
—, Oriental, 305.
—, Paget's, 304.
—, photographic, 892.
—, pyroxylin, early, 301.
—, pyroxylin-resin, Field's, 303.
—, Reid and Earle's, 304.
—, resin, 305.
—, Wilson and Story's, 300.
—, zapon, 301.
Lacquering, 319.
—, Bradford and Rawlins' method, 320.
—, Junghan method, 320.
Lacquering machines, 341.
Lacquers, acetone oil, 303.
—, amyl acetate, 300.
—, —, history of, 300.
—, analysis of, 358.
—, black, 343.
—, collodion, 298.
—, colored, 330.
—, constants of, 307.
—, Field's pyroxylin-resin, 303.
—, modern, 300.
—, non-hygroscopic, 302.
—, opacity of pyroxylin, 298.
—, pyroxylin for cheap, 114.
—, pyroxylin (paper) for, 114.
—, pyroxylin, manufactured first at, 301.
—, pyroxylin-resin, 303.
—, specific, 307.
—, " water white," 104.
Lactamide, 597.
Lactic, 485.
Lactic acid, 597.
Lactose, 255, 503.
Lactose nitrate, 58.
Lactose tartrate, 256.
Lakes, in pyroxylin plastics, 586.
Lambertype, 893.
Lamp filaments, viscose, 1099.
Lamp shades, lacquering, 338.
Lanolin, 369, 429, 432.
Lanterns, lacquering, 340.

Lanterns, 869.
Lantern slides, preparation of, 838.
—, preserving, 870.
Lard, 260.
Large plate collodion, 892.
Latex (rubber), 1099.
Lead acetate, 598.
Lead acetate as stabilizer, 120.
Lead arsenate, 328.
Lead arsenite, 328.
Lead borate, 623.
Lead butyrate, 598.
Lead chamber crystals, 995.
Lead formate, 246.
Lead nitrite, 628.
Lead oxychloride, 629.
Lead plaster, 414.
Lead propionate, 598.
Lead ricinate, 629.
Lead ricinoleate, 629.
Lead valerate, 598.
Leaded glass, celluloid imitation of, 675.
Leather, albumen coating on, 434.
Leather-board, 362.
Leather, boarded, 443.
—, buff split, 435.
Leather cement, flash point of, 1144.
Leather, chrome-tan, 443.
—, —, one bath process, 444.
—, —, white, 444.
Leather cloth, 365.
—, viscose for, 1110.
Leather, coating, Adams & McKay process, 432.
—, —, Edson's process, 430.
—, —, Field's process, 431.
—, —, Kennedy's process, 432.
—, coating of, 433.
—, coatings, colored, 451.
—, —, Pianko's method, 442.
—, coating with sensitive collodion, 887.
Leather collodion, 844.
Leather, designs on, producing, 428.
—, enameling, Goldsmith's process, 432.
—, enamel, preparation, 445.
—, filling pores, 436.
—, films, attaching to, 430.
—, flesh split, 435.
—, —, coating, 442.
—, glazed, 434.
—, —, coating, 434.
—, gold leaf, applying to, 529.
—, grain split, 435.
—, —, coating, Feval's method, 440.
—, —, coating of, 348.
—, hand decorated, 394.
—, heavy, coating, 435.
Leatherine, 362.
Leather, morocco, odor, imitation of, 438.
Leatheroid, 362.
Leather, ornamentation of, 428.
—, patent, embossing, 440.
Leather, patent, ethyl acetate in, 434.
—, —, preparation, 445.
—, —, pyroxylin solution for, 447.
—, pebbled, 443.
—, pyroxylin coated, classes, 435.
—, seasoning, 436.
—, sized, 434.
—, —, coating, 434.
—, split, 435.
—, —, deep buff, 436.
—, —, light buff, 436.
—, —, —, coating, 436.
Lebel powder, 962.
Lehner mantle, 357.
Lehner's silk, 471, 477.
—, microscopy of, 550.
—, strength of, 1035.
Leonard Smokeless powder, 939.
Lesmok powder, 957.
Letters, transparent, formation of, 309.
Leucine, 193.
l-Leucine, 193.
Leucine, source of, 198.
Leuco-malachite green, 878.
Levulinic acid, 485.
Levulose, 255.
Levulose trinitrate, 58.
Levulosan trinitrate, 58.
Liber, 17.
Libbrecht's powder, 963.
L. 3, Libbrecht's powder, 963.
Liccla yarn, 1089.
Light green dye, 451.
Lightning powder, 952, 953, 954.
Lightning smokeless powder, 951.
Light nitrobenzol, 168.
Lightno, 226.
Light solvol, 156.
Lignin, 4.
Lignocellulose, 3, 4, 993.
Lignocelloses, quantitative determination of, 4.
Lignoid, 748.
Lignone, 156.
Lignose, 17.
Lincrusta Walton, 408.
Line drawings, lantern slides of, 873.
Line negatives, with collodion, 887.
Line plain collodion, 893.
Line production, collodion in, 887.
Linen, impermeable, by cellulose acetate, 1032.
—, washable, by cellulose acetate, 1032.
—, washable coating for, 704.
Linoleum, 406.
Linoleum apyrofore, 412.
Linoleum (incombustible), 412.
Lint, artificial, 521.
Liquefaction test, explosive gelatin, 984.
Liquid bronze, flash point of, 1144.
Liquid court plaster, 823.
Liquid cuticle, 577, 749.
Liquid glue, 815.

Liquid skin, 824.
Liquor constringens, 815.
Liquor epispasticus, 816, 817.
Litharge, 446.
Lithium acetate, 598.
Lithium bichromate, 886.
Lithium bromide, 625.
Lithium butyrate, 598.
Lithium chloride, 625, 837.
Lithium iodide, 625.
Lithium lactate, 599.
Lithium monochloracetate, 598.
Lithium propionate, 598.
Lithium salicylate, 418.
Lithium valerate, 598.
Lithographic stone, imitation, 745.
—, printing on, 877.
Lithoid, 673.
Lithopone, 332.
Lithoxyl, 748.
Linseen, 451.
Litmus, 121.
Logwood, 331.
Loose powders, 941.
Lotos stripping film, 845.
Love polishing hand glove, 397.
Lumière spinning mechanism, 527.
Lummer-Brodhühn colorimeter, 32.
" Luster-cellulose," 1081.
Lustracellulose, 459, 501, 540.
Lustrogen, 308.
Lustrose, 459.
Lutidine, 263.
Lyddite, 967.

M, Powder, 963.
M. D. S. Cordite, 929, 937.
Macaroni filtering press, 913.
Macaroni press, 911.
Macintosh material, 413.
Madder, 331.
Magdala red, 330.
Magenta, 549.
Magic paint remover, 264.
Magic lantern slides, 869.
Magnesite, *see* magnesium carbonate.
Magnesium acetate, 265, 598, 626, 993, 1000, 1001, 1004.
Magnesium borate, 687.
Magnesium bromide, 625.
Magnesium butyrate, 1006.
Magnesium carbonate, 221.
Magnesium chloride, 625.
Magnesium iodide, 625.
Magnesium lactate, 598.
Magnesium lactophosphate, 599.
Magnesium monochloracetate, 598.
Magnesium nitrate, 19.
Magnesium *m*-oxytetraethyl-diamidotriphenylcarbidrid disulphonate, 1129.
Magnesium powders, 968.
Magnesium propionate, 598.
Magnesium ricinoleate, 253.
Magnesium stearate, 263, 321.
Magnesium sulphate, 19, 627, 1063.
Magnesium sulphoricinoleates, 253.
Magnesium valerate, 598.
Magnesium viscose, 1100.
Maisin, 749.
Malachite green, 330, 451, 548, 1024.
Maltodextrin, 713.
Maltose octonitrate, 58.
Malvacæ, 11.
Mandarin G, 451.
Manganese acetate, 598.
Manganese bromide, 625.
Manganese butyrate, 598.
Manganese chloride, 152, 625.
Manganese iodide, 625.
Manganese lactophosphate, 599.
Manganese propionate, 598.
Manganese resinate, 263.
Manganese salts as denitrifiers, 488.
Manganese valerate, 598.
Mannasaccharide, 2.
Mann method estimating mercuric chloride, 973.
Mannite, 510.
Mannitol, 516.
Mannitol stearate, 1007.
Mantles, Welsbach, 352.
Maps, lacquering, 321, 334, 343.
Marble, imitation, 691.
—, —, producing, 348.
Marine blue, 330, 451.
Marine objects, mounting of, 328.
Mariotte's law, 323.
Marksman powder, 951, 952, 954.
Marloid, 748.
Marokene, 370.
Marsden goods, 416.
Martingale rings, celluloid, 647.
Mastic, 150, 309, 343, 1028, 1096.
Mastication, of pyroxylin plastics, 608.
Matagnite gelatin, 964.
Matagnite powder, 964.
Match composition, pyroxylin, 326.
Matches, pyroxylin, 968.
Mathematical instruments, lacquering, 329.
Matte lacquers, 343.
Matte, leather, producing, 389.
Matte paper emulsion, 893.
Maurita, 59.
Maximite, 939.
Maxim rifle, 898.
Maxim-Schüpphaus powder, 940.
Mayer's glycerol-albumen, 803.
Medallion backs, pyroxylin, 718.
Medallions, celluloid, 689.
—, celluloid inlaid, 698.
Medusæ, mounting of, 328.
Meers' artificial leather, 370.
Melezitose, 2.
Melinite, 967.
Melon essence, 227.

Meltaway paint remover, 264.
Mentha crispa, 153.
Mentha pulegium, 153.
Menthol, 149, 1034.
Menthol collodion, 825.
Mercerization, 9, 1057.
Mercuric bromide, 625.
Mercuric chloride, 479, 625.
—, as stabilizer, 121.
—, estimating traces, 973.
Mercuric iodide, 625.
Mercuric sulphide, 720.
Mercurous salts as denitrifiers, 488.
Mercury, detection of, 973.
Mercury fulminate, denaturant for, 1129.
—, discovery, 899.
Mercury in cellulose nitrates, 52.
Mercury, masking heat test by, 971.
Mesitylene, 263.
Metacellulose, 3.
Metabisulphites as viscose coagulant, 1066.
Metacetone, *see* diethyl ketone.
Metachromatypes, 744.
Metaldehyde, 154.
Metallic incrustations, 698.
—, mfr. of, 689.
Metallized films, producing, 886.
Metallized papers, producing, 886.
Metallodion, 626.
Metallodium, 626.
Metanil yellow, 329, 547.
*Meta*nitro*para*cresol, 399.
Metaphosphoric acid, 993.
Meteor, 526.
Methenyl-3.4-toluylenediamine, 250.
Methenyl-*o*-toluylenediamine, 250.
Methenyltrichloramidin, 250, 255.
Methylacetanilide, 252, 258, 1021.
Methylacetanilide-phenylacetamide, 252.
Methyl acetate, 149, 157, 228, 598.
Methylacetone, *see* methylethyl ketone.
Methyl acetone, 266.
s-Methylacettetrachloranilide, 252.
as-Methylacetyltetrachloranilide, 255.
Methylal, 148.
Methyl alcohol, 181.
—, acetone in, 1115.
—, bromine absorption of, 1116.
—, constants of, 1115.
—, denaturant, 1114.
—, determining in lacquers, 359.
—, esters in, 1116.
—, flash point of, 1144.
—, tests for purity, 1115.
Methylamine, 240.
Methylamyl ketone, 152.
Methylaniline, 252.
Methylated ether, 153.
Methylated spirits, 154, 266.
Methyl benzoate, 147, 155.
Sym-methylbenzoyltrichloraniline, 252.
Methylbutyl ketone, 151, 152.
Methyl blue, 330.
Methyl carbamate, 259.
Methyl carbanilate, 259.
Methyl carbolate, 267.
Methyl carbonate, 155.
Methyl chloride, 154.
Methyl chloroform, 171.
Methyl cresylate, 267.
Methylene blue, 330, 343, 802, 1024, 1025.
Methylene blue BB, 548.
Methylene blue G, 548.
Methylene blue, 3R, 549.
Methylene blue, absorptive powers of, 34.
Methylene ethylene ether, 244.
Methylene-glycerol, 244.
Methylene green, 451.
Methylene oxide, 541.
Methylenetetramin, 758.
Methylethenyltrichloramidine, 250, 255.
Methyl ether, 157.
Methyl-*n*-ether, 157.
Methyethyl ketone, 151.
Methylethyl sulphate, 997.
Methyl formate, 147.
—, as cellulose acetate solvent, 965, 999.
Methyl green, 207, 330, 343, 451.
Methyl*iso*amyl ether, 157.
Methyl*iso*butyl ether, 157.
Methylmethenyltrichloramidine, 255.
Methylnaphthyl ketone, 254.
Methyl nitrate, 146, 150.
Methyl orange, 803.
Methyl oxalate, 229, 1019.
Methyloxynaphthyl ketone, 254.
Methyl oxanalate, 254.
Methyl phthalate, 256, 1016.
Methyl propionate, 231.
Methyl-propyl carbinols, 186.
Methylpropylcarbinyl acetates, 213.
Methylpropyl ketone, 151, 152.
Methyl salicylate, 147, 150.
Methylsaliretin, 758.
Methyl sebacate, 148, 253, 417, 719.
Methyl silicate, 307, 491.
Methyl succinate, 256.
Methyl sulphate, 1004.
Methyl-*o*-toluylenediamine, 255.
Methyl *p*-toluenesulphamate, 1017.
Methyl *p*-toluidinesulphonate, 1016.
Methyl valeral, 152.
Methyl valerate, 148.
Methyl violet, 343, 451, 802, 1025.
Methyl violet B, 1031.
Methyl violet 2B, 548.
Methyl violet 7B, 548.
Methyl violet R, 548.
Mexican fiber, 357.
Mexican grass, 520.
Mexican onyx, 694.
Mica, 312, 419, 690.
Mica lacquer (Tiller), 312.
Microcotton, 795.

Micro-organisms, effect of, on stability of cellulose nitrates, 51.
Microphone carbons, 521.
Microscopes, lacquering, 329.
Microscopy, cellulose nitrate in, 793.
Mikado brown B, 451.
Military guncotton, *see* cellulose nitrate.
Military powder, 952.
Millon's reagent, 459.
Minchew woof, 471.
Mineral fiber, 454.
Mineral jelly, in cordite, 930
Mineral oils, purification of, by amyl alcohol, 208.
Mineral turpentine, 272.
Mineral wax, *see* paraffin.
Mirac paint remover, 264.
Mirrors, celluloid, 718.
Mirror backs, celluloid, 718.
Mission leather, 396.
Mistic paint remover, 264.
Mixed acid, determination of, 70.
" Mixing picker " for cotton, 79.
Moddite, 937.
Modern lacquers, 300.
Mohair, artificial, 404.
Moirettes, 423.
Moisture, determination in cellulose nitrate, 972.
—, determination in explosives, 983.
—, in artificial filaments, 555, 559.
Moisture on window panes, preventing, 208.
Molded boat, articles like, of celluloid, 663.
Moldings, celluloid coated, 653.
—, denaturant in mfr. of, 1141.
—, pyroxylin, 731.
Molding pyroxylin plastic slabs, 670.
Moldings, viscoid, 1098.
Moleshott's iodized collodion, 823.
Monkey skin, imitating, 395.
Monoacetmonochlorhydrin, 253.
Monobenzoin, *see* glycerol monobenzoate.
Monobromated camphor, denaturant in mfr. of, 1141.
Monobromcamphor, 259.
Monochloracetic acid, 997.
Monochlorbenzylidene diacetates, 255.
Monochlordinitroglycerol, 947.
Monochlornaphthalin, 254.
Monochlortriphenyl phosphate, 254.
Monochlorvaleraldehyde, 150.
Monoethylacetyltrichloranilide, 255.
Monoethylamine, 515.
Monoethyl oxalate, 148.
Monoethyl phthalate, 254.
Monoethyl sebacate, 148.
Monol, 236.
Monomethylacetyltrichloranilide, 255.
Monomethylamine, 515.
Monomethylaminobenzyl alcohol, 251.
Mononitrocellulose, 25.
Mononitrocellulose, formula of, 26.
—, per cent nitrogen in, 26.
Mononitrodiacetins, 151.
Mononitromethane, 908.
Mononitronaphthalin, 154, 272, 416, 925, 957.
Mononitrotoluene, 356.
Monoölein, *see* glycerol monoöleate.
9:10-Monoöxyphenanthrylamine, 976.
Monopersulphuric acid, 247.
Monosulphoglyceric acid, 499.
Monothiocarbonates, 1059.
Morane's nitration process, 91.
Mordant, viscose as, 1108.
Moreens, 423.
Morocceoline, 369.
Mosaic, imitation, 695.
—, —, bars of, 638.
—, —, rods of, 638.
—, sectile, imitating, 696.
Mother-of-pearl, imitations, 311.
Motion pictures, 866.
Motography, 865.
Motorite, 936.
Mottled effect, producing in celluloid, 638.
Mourning jewelry, lacquer for, 344.
Mouth whistles, celluloid, 664.
Moving pictures, 866.
Mucedin, 749.
Mud guards, celluloid, manufacture of, 574.
Mulberry silk, 470.
Mulder's xanthoproteic acid, 60.
Müllerite, 901.
Müllerite No. 1 powder, 964.
Müllerite No. 2, 964.
Multicolor effects, producing, 348.
Multiperforated powder, 900.
Muriate of iron, *see* ferric chloride.
Museum specimens, preparation of, 328.
Musk artificial, 186.
Musk Baur, 186.
Muthmann's Liquid, 172.
Mycetozoa, 52.
Mycoderma cerevisiae, 177.
Mycoderma ellipsoideus, 177.
Myrrh, 334.

N. C. films, 844.
Nahnsen's gelignite, 948.
Nail brushes, celluloid, mfr. of, 716.
Naphtha, *see* benzine.
Naphtha cement, flash point of, 1144.
Naphtha, flash point of, 1144.
Naphthalene, 249, 253, 255, 258, 327, 485, 1016.
Naphthalene chlorides, 259.
Naphthalene sulphonates, 241.
Naphthalin, 758.
Naphthionic acid, 193.
Naphthol, 249, 258, 322, 327, 398, 399, 415, 764, 1014.

Naphthol benzoate, 258.
β-Naphtholdisulphonic acid, 308.
Naphthol green B, 732.
Naphtholsulphonic acid, 1047.
Naphthol yellow, 330, 878.
Naphthol yellow S, 732.
Naphthoxylacetates, 255.
Naphthyl acetates, 255.
Naphthylamines, 241, 399.
α-Naphthylamine, 1024.
Naphthylamine chloride, 1063.
Naphthyl blue, 330.
Naphthylmethanes, 255.
Naphthyl naphthoxylacetate, 255.
Naphthyl sulphamide, 241.
Naphthol yellow S, 451.
Narcotine, 819.
National gelignite, 948.
Naval Smokeless powder, 938.
Near turpentine, 272.
Negative, adding clouds to a, 872.
Negative cotton, 37.
Negative, varnishes, 844.
Negraline, 344.
Neonite powder, 962.
Neptune green, 879.
Neurodin, 259.
Neutralizant, dolomite as a, 221.
—, limestone as a, 221.
—, magnesite as a, 221.
—, quicklime as a, 221.
—, zinc carbonate as a, 221.
Neutral spirits, flash point of, 1144.
New E. C. Improved powder, 952, 956.
New fast green 2B, 548.
New fast green 3B, 548.
New methylene blue N, 548.
New Schultze powder, 952, 956.
" New Skin," 824.
New victoria blue F, 548.
New victoria blue R, 548.
New Zealand flax, 40.
Nickelous bromide, 625.
Nickelous chloride, 152, 625.
Nickelous iodide, 625.
Nicotine, as denaturant, 1128.
—, determination of, 1128.
Nigrosine, 330, 832.
Nile blue B, 548.
Nitraniline, 56.
p-Nitraniline-o-benzylsulphonic acid, 308.
p-Nitraniline-o-carboxylic acid, 308.
p-Nitraniline-o-sulphonic acid, 308.
Nitrated explosives, decomposition of, spontaneous, prevention, 951.
Nitrated filter cloth, 72.
Nitrated guncotton, 900, 950.
Nitrated paper, bleaching, 584.
Nitrated ramie, 578.
Nitrated silk, nitrogen in, 60.
Nitrated tissue, 856.
Nitrating acid, composition, 114.
Nitrating acid, composition of, 87, 99.
—, fortification of, 132.
—, heating of, 99.
—, recovery of, 132.
—, storage, 84.
—, storage in Bessemer steel tanks, 84.
—, waste, 100.
—, —, fortifying, 100.
—, —, separation of, 100.
Nitrating apparatus, 781.
Nitration, acids used in, 83.
Nitration and washing, combination of, 97.
Nitration, degrees of, 25.
—, direct dipping process of, 84.
—, displacement, 929.
Nitration mixtures, properties of, 83.
Nitration of cellulose, acid fortification, 132.
—, influence of water on, 30.
Nitration, theory of, 35.
Nitric acid, 449.
—, synthetic, preparation, 137.
—, vapor pressure of, 36.
Nitroacetanilide, 252.
Nitroacetins, 157.
Nitroacetoluides, 252.
o-Nitroacylamido derivatives, 250.
Nitrobenzene, 145, 168, 207, 262, 272, 356, 902, 939, 947, 987, 994, 1001.
Nitrobenzyl chlorides, 259.
Nitrocellulose-casein filaments, 518.
Nitrocellulose explosive, 781, 792.
Nitrocellulose powder, 792.
Nitrocellulose silks, 459.
—, luster increasing, 459.
Nitrocellulose, solvents of, 144.
Nitrocuminol, 1004.
Nitrocumol, 411.
Nitrocymene, 411.
Nitrodextrin, 59, 946.
Nitroethane, 472.
o-Nitroethylbenzene, 1004.
Nitroformins, 157.
Nitrogen, determination by Dumas' method, 68.
—, determination of, 65.
Nitrogen oxides, determination of, 69.
—, removal from nitrating acid, 134.
Nitroglucose, 457, 575.
Nitroglycerol, 149, 207, 304, 394, 969.
Nitroglycerol absorbents, 948.
Nitroglycerol explosives, 946.
Nitroglycerol-guncotton explosives, 945.
Nitroglycerol, inhibiting materials for, 948.
Nitroglycerol spirits, flash point of, 1144.
Nitroglycerol, testing, 984.
Nitroguanidin, 935.
Nitrohydrocellulose, 61.
Nitro-jute, 4, 57, 964.
Nitrolactine, 946.
Nitrolactose, 946.

Nitrolinolein, 305.
Nitrolite, 946.
Nitromannite, 57.
Nitrometer, 65.
—, inventor of, 24.
—, two-bulb, 65.
Nitromethane, 948, 989.
Nitron, 768.
Nitron nitrate, 768.
Nitrophenol, 1014.
Nitronaphthalins, 154, 356, 411, 627.
Nitro-oxycellulose, 61.
Nitropentaerythrite, 57.
Nitrophenol, 366.
Nitrophthalic acid, 175.
Nitroprussides as denitrifiers, 488.
Nitroricinolein, 305, 412.
Nitrosaccharose, 59.
Nitrosaccharose in photography, 829.
Nitro silk, 460.
Nitrosoguanidine, 935.
Nitrostarch, 485.
Nitrotoluene, 138, 1004.
p-Nitrotoluene, 1004.
Nitrotoluidine, 56.
p-Nitrotoluol, 258, 411.
Nitrous ether, denaturant in mfr. of, 1141.
Nitroxylin, 899.
Nitroxylol, 411, 1004.
Non-curling films, 844.
Normal hygroscopic moisture, 47.
" Normal " Smokeless powder, 964.
Normann's copper compound, 1046.
Norway spirits, 272.
Nougat, cellulose acetate in, 1010.
Nutria, imitating, 408.
Nuturps, 272.

Oarite, 962.
Oberbruch silk, 501.
Obermüller test, 969, 977.
Octa-acetylcellobiose, 990.
Oct-acetyldiglucose, 256.
Octonitrocellulose, formula of, 26.
—, per cent nitrogen in, 26.
Œnanthylic acid, 1007.
Oil of amber, 398.
Oil of anise, 149, 398.
Oil of aspic, 628.
Oil of balm, 148.
Oil of bay, 153.
Oil of bergamot, 398, 802.
Oil of birch, 398.
Oil of birch tar, 150.
—, rectified, 148.
Oil of bitter almonds, 153.
Oil blown, 431.
Oil of cade, 398.
Oil of cajeput, 153, 398, 802.
Oil of camphor, 236, 299, 398.
Oil of caraway, 149.
Oil of caraway chaff, 153.
Oil of caraway seed, 153.
Oil of cassia, 146, 148, 742.
Oil castor, acetylated, 1033.
Oil of cedar leaf, 153.
Oil of cedarwood, 398, 802.
Oil of chamomile, 149, 150.
Oil of cherry laurel, 148.
Oil of cinnamon, 146, 149, 150.
Oil of cinnamon (Chinese), 153.
Oil of cinnamon, heavy, 148.
Oil of citronella, 148, 153, 266, 398.
Oil of cloves, 149, 802.
Oil of clove buds, 153.
Oil of cottonseed, 367.
Oil of cubebs, 153.
Oil of cumin, 149.
Oil of cypress, 398.
Oil of dill, 149.
Oil of elecampane, 149.
Oil of erigeron, 150.
Oil of eucalyptus, 1034.
Oil of fennel, 398.
Oil of fennel seed, 149.
Oil of ginger, 153.
Oil of golden rod, 149.
Oil of heavy wine, 149.
Oil of hemlock, 153, 398.
Oil of hyssop, 149, 150.
Oil of juniper, 398.
Oil of laurel, 149.
Oil of lavender, 628, 802.
Oil of lemongrass, 153.
Oil, linseed, boiled, testing, 447.
Oil, linseed, boiling of, 446.
—, —, driers for, 446.
—, —, tanked, 446.
Oil of maize, 412.
Oil of marjoram, 149.
Oil of melissa, 148, 150.
Oil of mirbane, 168.
Oil of myrtle, 149.
Oil, olive, 367.
Oil of origanum, 398.
Ol. origanum, cretici, 802.
—, gallici, 802.
Oil, palm, 367.
Oil of palmarosa, 149, 150.
Oil of parsley, 235.
Oil of patchouly, 398, 428.
Oil of pennyroyal, 148, 150, 256.
Oil of peppermint, 149, 153.
Oil of pimento, 153.
Oil of rape, 308.
Oil of rosemary, 150.
Oil of rue, 150, 153.
Oil, Russia leather, 398.
Oil of sage, 149.
Oil of sandalwood, 153, 802.
Oil of sassafras, 149, 150, 153.
Oil of savin, 153.
Oil of spearmint, 146, 150.
Oil of spruce, 153.
Oil of sweet birch, 147.

Oil of tansy, 149, 150, 153.
Oil of thuja, 256.
Oil of thyme, 802.
Oil of thyme (red), 153.
Oil of valerian, 149.
Oil of vetiver, 398.
Oil of wine, light, 149.
Oil of wintergreen, 147.
Oil, wood, Chinese, 447.
Oil, wood, Japanese, 447.
Oil of wormseed, 149, 150.
Oil of wormwood, 149, 153.
Oils, vulcanized, 473.
Oleic acid, 734.
Oleoacetin, 151.
Oleodiacetin, 151.
Oleoresins, 334.
" Oleum," 83, 135.
Oleum andropogan citrati, 153.
Olszewski converting machine, 636.
Omnicolor plates, 881.
Onyx, imitation, 693.
Opacine, 343.
Opals (photographs), 869.
Opal blue, 330.
Opaque lacquers, 344.
Open-seam coverings, celluloid, 646.
Ophrydium versatile, cellulose in, 1.
Optics, celluloid in, 733.
Optical analysis of cellulose nitrate, 44.
Optical frames, celluloid, 733.
Orange 2, 451, 547, 548.
Orange 4, 547.
Orange G, 803.
Orange shellac, 335.
Orcein, 810.
Orchitis, collodion for, 825.
Ordnance Department 115° test, 969, 973.
Ordnance powder, mfr. of, 908.
Organic residue, determination in cellulose nitrate, 972.
Organic sensitizer, 830.
Organic sensitizers, in photography, 832.
Organzinc, 478.
Oriental gold paint, 308.
Oriental paper, 322.
Oriental tissue, 312.
Orientation in celloidin, 799.
Orth's discharging fluid, 803.
Orthochromatic collodion emulsion, 877.
Orthochrome, 884.
Orthopedic surgery, celluloid in, 721.
Ossein, 518.
Ostrich plumes, preserving, 410.
Ova, collodionization of, 808.
Over-intensification, overcoming, 871.
Oxalic acid, 53, 260, 444, 485, 585, 885.
—, from jute, 4.
Oxalic esters, 255.
Oxalic ether, *see* monoethyl and diethyl oxalates.
Oxamic esters, 255.
Oxamide, 56.
Oxidized effect, producing, 345.
Oxolin, 412.
Oxyacetophenon, 252.
p-oxybenzophenon, 252.
Oxycellulose, 8, 990, 993.
α-Oxycellulose, 8.
β-Oxycellulose, 8.
Oxycellulose, acetylated, 990.
Oxydiamine black J E, 548.
Oxydiamine blues, 548.
Oxydiamine brown G, 548.
Oxydiamine red, 548.
Oxycellulose, formed in nitration, 32.
—, from jute, 4.
Oxycellulose nitrate, 8, 33, 34.
—, formation of, 32.
Oxycelluloses, bromine, 34.
—, calcium hypochlorite, 34.
Oxycellulose, nitrates of, 61.
—, nitric acid, 34.
—, potassium chlorate, 34.
—, potassium permanganate, 34.
Oxydianil yellow O, 549.
p-Oxyethylacetanilide, 252.
Oxynitrocellulose, action of potash on, 62.
Oxyphenylbenzyl ketone, 252.
Oxypyruvic acid, 71.
Ozokerite, *see* paraffin.
Ozone, 22.
Ozonized oils, 153.

Packing rings, celluloid, 698.
Page regulator, 979.
Paint material, viscose as, 1103.
Paint removers, 260, 781.
—, acid, 260.
—, albuminous containing, 268.
—, analysis of, 271.
—, application of, 263.
—, casein containing, 268.
—, composition of, 260.
—, cyanide, 260.
—, disintegrating, 260.
—, proteid containing, 267.
—, roughing, 264.
—, solvent, 262.
—, stripping, 269.
—, thickeners, 264.
—, uninflammable, 267.
—, viscose in, 267.
—, water soluble, 266.
—, wood spirits, estimation of, in, 271.
Palladium chloride, 796.
Palm species, nitration of, 59.
Palmitin, 151.
Panchromatic collodion emulsion, 878.
Panclasite, 621.
Pancreatic secretion, dialysis of, 812.
Pantasote, 397.
Paper, Armenian, 322.
Paper collars, waterproofing, 707.

Paper, celluloided, 673.
Paper collodion, 823.
Paper, continuous coating of, 849.
Paper emulsion, glossy, 893.
—, matt, 893.
Paper, enameled, 418.
Paper fasteners, lacquering, 331.
Paper, for nitration, 104.
Paper, glazing, 851.
—, impregnation of, 416.
—, impregnation with pyroxylin, 321.
—, lacquering, 334, 343.
—, metallized, preparing, 886.
—, nitrated, bleaching of, 584.
—, nitration, 118.
—, —, acid formula, 113.
—, —, centrifugal, 95.
—, —, continuous, 114.
—, —, Hyatt method, 107.
—, —, Mowbray method, 106.
—, nitration of, 104.
—, nitration, Schüpphaus and White method, 104.
—, —, Tribouillet and de Besancle method, 107.
Paper oriental, 322.
Paper, stereotype, preparing, 322.
—, viscose sized, 1099, 1101.
Papier maché, preparing, 361.
Paproxyl, 104, 303.
Paracasein, 519.
Paracellulose, 3.
Paraffin oil, 261.
Paraffin sections, 794.
Paraffinum liquidum, 931.
Paraform, *see* trioxymethylene.
Paraformaldehyde, 399, 1012.
Paraform collodion, 819.
Paraldehyde, 154, 537.
Paranitraniline, 1024.
Paranitraniline red, 1024.
Paranoid poker chips, 679.
Paraphosphine, 451.
Paraphosphine G, 549.
Para-pyroxylin, 704.
Parasol handles, covering with celluloid, 641.
Parchment paper, preparation of, 8.
Parian marble, 692.
Parisian artificial silk, 501.
Parkesine, 364, 568.
—, method of manufacture, 569.
Parkesite, 569.
Parlor tennis balls, celluloid, 727.
Paroxylin, 856.
Parrot paint remover, 264.
Partsine, 751.
Pasbosene, 38, 580.
Passementerie, 525.
Patent blue, 547.
Patent leather, 425.
—, artificial, 404.
Patentoid, 451.
Patent phosphine G, 548.
Patent phosphine GG, 548.
Patent phosphine R, 548.
Patina, 428.
Pauly silk, 1077.
—, breaking strain of, 553.
—, microscopy of, 550.
Pavy's collodion, 820.
Peachwood, 331.
Pear, Bergamot, essence, 227.
Pear drops, 225.
Pear, glycolignose in, 4.
—, Jargonelle, essence of, 227.
—, pectocellulose in, 4.
Pearl, imitation, 682, 690.
Pectin, 3.
Pectocelluloses, 3.
Pectose, 3.
Pegamoid, 339, 750.
Pegamoiding, 750.
Pegamoid paint, 751.
" Peinture incombustible," 1103.
Pencil cases, celluloid, 642.
—, making, 420.
Pencils, lacquering, 337.
Penholders, celluloid, 737.
—, lacquering, 337.
Pens, celluloid, 737.
Pencillium glaucum, 187.
Peninsula paint remover, 264.
Pennyroyal European, 153.
Pentacetylglucose, 1008.
Pentacetyllevulose, 256.
Pentachlorethane, 172, 989.
Pentachlorethylene, 1014.
Pental, 207.
Pentanitrocellulose, 27.
—, formula of, 26.
—, per cent nitrogen in, 26.
Pentanitrostarch, 56, 57.
Pentoses, nitric acid esters of, 58.
Pepsin, collodion with, 814.
Perchoid, 413.
Perfume paper, preparing, 322.
Pergamyn, 20, 750.
Perlmuttin, 312.
Permanganate, bleaching by, 584.
Permeability, unit of, 813.
Peru balsam, *see* balsam Peru.
Peru balsam, 305, 334.
Peruvian cotton, *see* cotton, Peruvian.
Pessary, celluloid, 729.
Petroid, 673.
Petroleum ether, flash point of, 1144.
Petroleum naphtha, *see* benzine.
Peyton powder, 939.
Phallusiae, tunicin in, 1.
Pharmacopœal collodions, 816.
Pharmacopœias, pyroxylin in, 115.
Phellandrene, 149, 236.
Phenacetin, *see* acet-*p*-phenetidin.
Phenetol, 779.
Phenoid, 264.

Phenol, 252, 257, 266, 802, 987, 1013, 1014.
Phenolbromides, 259.
Phenol carbonic esters, 253.
Phenolchlorides, 259.
Phenolsulphonic acid, 996, 1039, 1047, 1048.
Phenoltrichloride, 259.
Phenylacetamide, *see* acetanilide.
Phenyl acetate, 157, 172, 267.
Phenylacetic acid, 1007.
d-Phenylalanine, 196.
Phenylaminoacetic acid, *see* phenyl glycocoll.
Phenylaminobenzyl alcohol, 251.
Phenylbenzyl ketone, 252.
Phenyl citrate, 255.
Phenylene diamine, 249.
m-Phenylenediamine, 976, 1024.
Phenylethyl alcohol, 196.
Phenyl formate, 255.
Phenyl glycocoll, 193.
Phenylhydrazine, 33.
Phenylnaphthaline, 255.
Phenyloxylacetates, 255.
Phenyloxylacetic acid, 255.
Phenyl phosphate, 1012.
Phenyl propionate, 255.
Phenylpropionic acid. 1007.
Phenyl propyl cinnamate, 251.
Phenyl salicylate, *see* salol.
Phenyl *p*-sulphethylanilide, 254.
Phenyl tartrate, 255.
Phenyl *p*-toluenesulphonate, 254.
Phigalian marble, imitating, 693.
Philadelphus coronarious, 185.
Philosophical instruments, lacquering, 329.
Phloxine, 330, 547.
Phœnix powder, 949.
Phonograph cylinders, celluloid, 733.
Phloroglucinol, 764.
Phosphine, 451.
Phosphoric acid, 491, 513, 993, 1038.
Phosphorus oxychloride, 254, 993.
Phosphorus pentachloride, 993.
Phosphorus pentoxide, 993.
Phosphorus thiochloride, 254.
Phosphorus trichloride, 254.
Phosphosulphuric acid, 491.
Photocotton, 37.
Photo-engravings, denaturant for, 1129.
Photo-enlargements, denaturants in mfr. of, 1141.
Photographic collodion, denaturant for mfr. of, 1129.
Photographic dry plates, denaturants in, 1127.
Photographic emulsion, 781.
Photographic films, acetate, 1015.
Photographic film developing machine, 781.
Photographic films, manufacture, 839.
Photographic films, uninflammable, 1014, 1015.
Photographic lacquers, 892.
Photographic papers, analysis of, 897.
Photographic pellicles, preparing, 839.
Photographic pellicle, producing, 846.
Photographs, positive, transparent, 873.
Photographic screens, celluloid, 732.
Photographic sheets, producing, 852.
Photographs, glazing with pyroxylin, 326.
Photography, collodion in, 827.
Photometry, amyl acetate in, 228.
Photo-prints, denaturants in mfr. of, 1141.
Photospectroscopy, 883.
Photoxylin, 37, 38, 606, 749, 795.
Phrygian marble, imitating, 692.
Phthalic acid, 764.
Phthalic acid esters, 254.
Phthalonic acid esters, 254.
Phytelephas macrocarpa, 59.
Piano keys, celluloid coated, 731.
Picamer, 72.
Picatinny Arsenal, nitration at, 96.
Picric acid, 834, 877.
—, guncotton and, 967.
Picture frames, denaturant in mfr. of, 1141.
—, lacquering, 349.
Picture moldings, celluloid coated, 653.
Pictures, preserving by celluloid, 745.
—, waterproofing by celluloid, 745.
Pigment determining in lacquers, 359.
Pigments, fixing on textiles with sericose, 1022.
Piles, collodion for, 825.
Pinachrome, 877.
Pinacyanol, 834, 877.
Pinaverdol, 832, 834, 878.
Pincushions, enameling, 347.
Pins, celluloid inlaid, 698.
Pin trays, celluloid, 728.
Pine turpentine, 272.
Pinene, 148, 236, 271.
— chloride, 237, 240, 242, 250.
d-Pinene chloride, 237
Pinene hydriodide, 245.
Pinene perozonide, 245.
Ping pong balls, celluloid, 726.
" Pinholes " in leather, 449.
—, removal of, in artificial leather, 381.
Pinonic acid, 245.
Pinonic aldehyde, 245.
Piperine, 240.
Pipes, coating lead, with pyroxylin, 326.
—, lining with celluloid, 645.
Pipe stem bits, amber, 691.
Pistons, celluloid, 698.
Pistorius distillation apparatus, 181.
Pitchers, lining, with celluloid, 730.
Pith, nitration of, 60.
Plain collodion, 830, 831.

Plant tissues, celloidin sections of, 809.
—, infiltration of, 810.
Plastics, casein, 763.
Plastic (pyroxylin), formation of, 606.
Plastics, stability of, 120.
Plastol, 299.
Plates, coating with sensitive emulsion, 858.
Platinum toning, 872.
Playing cards, celluloid, 732.
Pleus-Obermüller stability test, 977.
Plum, pectocellulose in, 4.
Plumes, 525.
Plush, brocaded, producing, 393.
Pluton brown, 548.
Poaching, 124.
Poiseuille's law, 814.
Poker chips, mfr. of, 679.
Polariscope, determination camphor with, 768.
—, examination of cellulose nitrate by, 44.
Polariscopes, lacquering, 329.
Polarization, 550.
Polishing celluloid sheets, 670, 676.
Polishing, leather producing, 401.
Polishing machine, for celluiold, automatic, 678.
" Polka dot," printing with celluloid, 741.
Polychloramidins, 250, 255.
Polychloranilines, 255.
Polysaccharides, analysis of, 2.
Ponceau 4R, 732.
Ponceau FR, 732.
Ponolith, 332.
duPont 1909 Military powder, 951, 952, 953.
duPont powders, 951.
duPont No. 1 powder, 952.
duPont No. 1 Rifle Smokeless powder, 954.
duPont Rifle Smokeless No. 1 powder, 951.
duPont Smokeless powder, 952, 955.
Pontianac, 415.
Poplins, 423.
Positives (direct), on glass, 873.
Positive, reducing of, 872.
Potassium acetate, 265, 598, 993.
Potassium aluminate, 1083.
Potassium butyrate, 598.
Potassium camphorate, 598.
Potassium cyanide, 260.
—, as denaturant, 1129.
Potassium formate, 246.
Potassium iodide starch paper, preparation of, 970.
Potassium lactate, 598, 599.
Potassium lactophosphate, 599.
Potassium permanganate, 1092.
—, stabilizer, 510.
Potassium propionate, 598.
Potassium salicylate, 418.
Potassium succinate, 599.
Potassium sulphate, 479.
Potassium sulphide, 746.
Potassium sulphocyanide, 746.
Potassium tartrate, 901, 936.
Potassium valerate, 598.
Potassium xanthate, 1059.
Potassium zincate, as cellulose coagulant, 514.
Potentite, 961.
Poudre B, 900, 962.
Poudre B, AM_2, 962.
—, AM_8, 962.
Poudre BN, 900, 962.
Poudre J, 962.
Poudre celluloïque, 962.
Poudre pyroxylée, 962.
Poudre pyroxylée No. 0, 1, 2, 3, 962.
Poudre Vieille, 962.
Powder band cutting machine, 943.
Powders, cellulose nitrate for, 116.
Powder cutter, 921.
Powder cutting machine, 781.
Powder, drying, 923, 943.
Powder grain, formation of, 940.
Powder grains, hardening.
Powder press, 915.
Powder, smoke from, 898.
—, smokeless, *see* smokeless powder.
Powders, smokeless, 899.
Powder strips, 921.
Powder strip cutting machine, 943.
Powders, stabilizer, diphenylamine, 121.
—, varying bulk of, 942.
Prairie turpentine, 272.
" Precious " coral, 690.
Près de Vaux silk, 460.
Preservatives for collodion, 829.
Primrose dyestuff, 329.
Printing blocks, celluloid, 747.
Printing inks, celluloid, 741.
Printing on celluloid in colors, 744.
Printing on paper, cellulose acetate for, 997.
Printing-out silver emulsion, 833.
Print, pyroxylin, colored, 781.
Printing, with viscose, 1108.
Process work, collodion in, 887.
Propion, 151.
Propionic acid, 197.
—, production of, 231.
Propionyl chloride, 187.
Proprietary collodions, 823.
Propylacetanilide, 252.
Propyl acetate, 302.
Propyl acetates, 231.
Propyl alcohol, 125, 150.
n-Propyl alcohol, 182.
Propyl alcohol, properties, 183.
iso-Propylbenzene, 1004.
Propyl benzoate, 147, 155.
Propylbutyl ketone, 151.

Propyl butyrate, 147.
Propyl carbanilate, 259.
Proypl formate, 147.
Propylhexyl ketone, 151.
Propylpentyl ketone, 151.
Propyl phthalate, 256.
Propyl salicylate, 155.
Propyl succinate, 256.
Propyl valerate, 148.
Protective cotton, 37.
Prune essence, 227.
Prussian blue, 809.
Ptyalin, 720.
—, collodion with, 814.
Puering, 427.
Pulegone, 148, 256, 1011.
Pulp, wood used for, 18.
Pulping cellulose nitrate, 121.
Pulping pyroxylin, 585.
Pulper, Currier, 121.
Pulverloid, 751.
Pulveroid, 750.
Purses, celluloid inlaid, 698.
Pyralin, 38, 580, 748.
—, denaturant for, 1128.
Pyrantin, 38, 751.
Pyrazolone derivatives, 258.
Pyridine, 994, 1037.
Pyridine bases, constants of, 1117.
—, tests for, 1116.
Pyridine chloride, 193, 1063.
Pyridine, denaturant, 1114.
Pyridine picrate, 181.
Pyridine sulphate, 1007.
Pyrobronzine, 313.
Pyrocollodion, 37.
—, per cent nitrogen in, 37.
Pyrocollodion powder, mfr. in U. S., 902.
Pyrocollodion, preparation of, 97.
Pyrogallol, 758, 1014.
Pyronitrocellulose powder, 781.
Pyrophosphoric acid, 993, 1032.
Pyrosomidæ, tunicin in, 1.
Pyroxylene, *see* pyroxylin.
Pyroxylic spirit, 38, 182.
Pyroxylin, *see* also cellulose nitrate.
—, 38.
—, applying to leather, 449.
Pyroxylin capsules, 323.
—, cheap grade of, nitration, 114.
—, combining with camphor, 581.
Pyroxylin-copal lacquers, 352.
Pyroxylin, dehydrating, Edson's method 600.
—, —, France's method, 602.
Pyroxylin films, coating, 858.
Pyroxylin labels, 747.
Pyroxylin lacquers, *see* also lacquers, pyroxylin, 316.
—, acidity in, 324.
—, alkalinity in, 324.
—, applying, 318.
—, cheapening, 317, 333.
Pyroxylin lacquers, clarification, 317.
—, colored, 328.
—, decomposition of, by light, 329.
—, formula for, 318.
—, glazing carbon paper with, 326.
—, hardness of, 324.
—, iridescence in, 317.
—, printing with, 325.
—, strength of, 316.
—, testing, 324, 358.
—, thinner, formula for, 318.
—, uses, 324.
—, water added to, 318.
—, water white, 317.
Pyroxylin, mounting on mandrel, 633.
Pyroxylin, nitrogen (low) content in, 115.
Pyroxylin paper impregnation, 321.
Pyroxylin, pharmacopœal, manufacture of, 821, 822.
Pyroxylin plastics, *see* celluloid, pyralin, etc.
Pyroxylin plastics, alcohol in, object of, 607.
Pyroxylin plastic, analysis of, 765.
Pyroxylin plastics, commercial names of, 751.
—, denitration, 625.
Pyroxylin plastic goods, 582.
Pyroxylin plastics, in England, 569.
—, in Europe, 573.
—, in Italy, 579.
—, in Japan, 579.
—, in United States, 572, 574.
—, introducing coloring matter in, 585.
Pyroxylin plastic, manufacture, by intense cold, 624.
—, — of, 582, 622, 623.
—, —, Benjamin method, 624.
—, —, Hyatt's process, 630.
—, —, Magnus method, 623.
—, —, Miller method, 614.
—, —, Morane method, 623.
—, mastication of, 608.
Pyroxylin plastic moldings, 731.
Pyroxylin plastic objects, molding, 660.
Pyroxylin plastics, preparing camphor for, 586.
Pyroxylin plastic process, Hyatt's, 580.
Pyroxylin plastics, properties of, 751.
—, raw, 582.
—, rods, formation, 630.
—, seasoning, time required for, 611.
Pyroxylin plastic sheets, 668.
Pyroxylin plastic slabs, molding, 670.
Pyroxylin plastic, softening, 619.
Pyroxylin plastics, solvent recovery in, 605.
—, stabilizers in, 595.
—, tubes, formation, 630.
—, uninflammable, 624.
—, warpage of, 611.
—, waste, utilizing, 617.

Pyroxylin plastics, wet process of forming, 583.
Pyroxylin pulp dehydration of, 599.
Pyroxylin-resin lacquers, 345.
Pyroxylin sheets, continuous, 852.
—, producing, 852.
Pyroxylin-shellac lacquers, 345.
Pyroxylin solvent, 781.
Pyroxylin tubes, 322.
Pyroxylin veneers, 673.
Pyroxyline, 38.
Pyroxylinum, 114.
—, solubility of, 115.
Pyrrol dyes, 1111.

" Quantitative tests " for stability, 969.
Quercitrin, 331.
Quills, celluloid, 737.
Quinine, 461.
Quinine valerates, 175.
Quinol, 517.
Quinoline, 207, 878, 1037.
Quinoline blue, 207.
Quinoline chloride, 193.
Quinoline sulphate, 1007.
Quinoline yellow, 547.
Quinone 517, 1085.
Quinone A, 840.

Radium emanations, protecting from, 417.
Raffinose, 2.
—, nitrate, 58.
Rain coats, preparation of, 416
Ramie, 402.
—, nitrated, 578.
—, nitration of, 59, 78.
Randeo, 313.
Raspberry essence, 227.
Raw film, 866.
Razor strops, viscose, coated, 1106.
Receptacles, celluloid, 727.
Red ammonite marble, imitation, 692.
Red coral, 690.
Redenaturation of alcohol, 1137.
Redeveloping slides, 871.
Redeveloping solutions, preserving, 871.
Redpath method acid calculation, 138.
Red Star powder, 962.
Redwood viscosimeter, 63.
Refractometer, determination camphor with, 768.
Removal of foreign bodies, in cellulose nitrate, 123.
Rendite, 949.
Rennet, collodion with, 814.
Repauno gelatin, 949.
Replicas, producing on leather, 395.
Resin, determination of, 359.
Resinit, 335, 758, 759, 760.
Resin lacquers, 334.
Resinolines, 363, 414.
Resins, 305.
Resins, solubility of, in carbon tetrachloride, 170.
Resorcin, 758, 1014.
Resorcin brown, 451.
Resorcinol, 764.
Resorcinol diacetate, 1022.
Reworking powder, 938.
Rheonine, 451.
Rheumatism, collodion for, 825.
Rhigoline, flash point of, 1144.
Rhinestones, mounting in celluloid, 715.
Rhodamine, 330, 690, 879.
Rhodamine BS, 548.
Rhodamine 6G, 548.
Rhoduline heliotrope, 330, 343.
Rhoduline red, 451.
Rhoduline yellow 6B, 548.
Ribbe accumulator, manufacture of, 574.
Ricinoleates, 253.
Rifle powders, 951, 960.
Riflcite powder, 901, 960.
Rings, celluloid, 647, 662.
Rings, celluloid, imitation ivory, 685.
Rocceline, 548.
Rock turpentine, 272.
Rods, imitation ivory, 684.
—, plastic, formation, 630.
Rosaline, 121, 461, 907.
Rosazeine, 330.
Rose bengal, 832.
Rose metal, 257.
Rose pearl, 750.
Röntgen photography, collodion films for, 833.
Rose s tube. 210,
Rosin, 252, 314, 335, 389.
Rubber collars, 706.
Rubber, purification of, denaturant in, 1129.
Rubber substitutes, 406.
—, floating, 406.
Ruby powder, 959.
Russia leather oil, 398.
Russian pyrocollodion powder, 901.
Russian red, 451.
Russian turpentine, 272.
Rye straw, nitration of, 60.

S. Powder, 963.
Saccharose, 503.
Saccharose octa-acetate, 256.
Saccharose hepta-acetate, 256.
Saccharose monoacetate, 256.
Saccharose tetra-acetate, 256.
Safety powder, 956.
Saffranine, 330, 451, 801, 1024, 1025.
Saffranine BOOO, 548.
Saffranine GOOO, 548.
Saffranine S, 150, 549.
Saffron, 824.
Safrol, 153, 236, 398, 399.
Salacetol, 258.
Salicylate of methyl, *see* methyl salicylate.

Salicylated collodion, 820.
Salicylic acid, 248, 327, 682, 764, 820, 1066.
Saligenin, 758, 1014.
Salipyrin, 258.
Saliretin, 758.
Salol, 147, 258.
Salpidæ, tunicin in, 1.
Salviol, 149.
Samsonite, 949.
Sandalwood, 329.
Sandarac, 309, 334, 341, 1028.
Sandpaper, producing, 404.
Santonine, denaturants in mfr. of, 1141.
Saponin, effect of collodion on, 814.
Sardonyx, imitating, 694.
Satino morocco, 416.
Sattenole, 416.
Sawdust, nitrated, 59.
Saxonite, 961.
Sayboldt viscosimeter, 63.
Scales, mixing, 135.
Scarlet R, 451.
Schallibaum's collodion section method, 808.
Scheibler regulator, 979.
Schiff's aldehydic group reagent, 33.
Schiff's reagent, 545.
Schopper testing machine, 1035.
Schuetzen Rifle powder, 954.
Schuetzen Smokeless powder, 951, 952.
Schultze powder, heat test for, 980.
Schwab powder, 901.
Scouring cotton, 80.
—, caustic soda, 81.
Screens, colored, celluloid, 732.
Screen negatives, collodion for, 887.
Sea, depth, determining, 323.
Sea Island cotton, *see* cotton, Sea Island.
" Seal All " collodion, 823.
" Seal Skin " collodion, 824.
Seasoning leather, 433.
Seaweeds, mounting of, 328.
Sebacic esters, 253.
Sebacic ethers, 417.
Sebacylic ether, *see* ethyl sebacate.
Sectile mosaic, imitating, 696.
Seed lac, 331.
Seiden blau R, 732.
Semaphore, celluloid mirror for, 718.
Semioxamazone, 149.
Sensitive cotton, 37.
Sensitizer A, 878.
Sensitizers in photography, 832.
Sensitizer, organic, 830.
Sensitizing, continuous films, 865.
Serial sections by celloidin method, 806.
Sericose, 325, 741, 1022.
d-Serine, 196.
Serpentine limestone, imitating, 692.
Serpent skins, coating, 453.
Serum albumen, 268.
Setocyanine, 547.
Seto dyestuffs, 545, 548.
Setoglaucine, 547.
Sharpshooter powder, 951, 952, 953.
" Sheen " effects, producing, 396.
Sheets, celluloid, drying, 670.
—, —, finishes on, 672.
—, —, polishing, 670.
—, pyroxylin plastic, 668.
Shell, imitation, 689.
Shellac, 303, 334, 335, 338.
—, adulterants, 335.
—, extracting wax from, 336.
—, imitation, 340.
Shellac lacquers, 336, 337.
Shellac, purification, Field's method, 336
—, —, Greiger's method, 336.
Shellac removers, 264.
Shellac, solvent, with camphor, 146.
—, toughening, 339.
Shellac varnishes, denaturant in, 1127.
" Shimmer " effects, producing, 396.
Shimose, 967.
Ship bottoms, celluloid covering for, 699.
—, lacquers for, 327.
Shirt bosoms, celluloid, 706.
Shoe polish, denaturants in mfr. of, 1141.
Shoe polishes, turpentine in, 273.
Shotgun powders, 942, 951.
Shotgun Rifleite powder, 963.
Shot, manufacture of, 456.
Signaloid, 343.
Signals, stained celluloid sheets for, 675.
Signs, waterproof, celluloid, 673.
Silicate viscose, 1093.
Silica in cellulose, 5.
Silicic esters, *see* methyl, etc., silicate.
Silicic ethers, 491, 626.
Silicides, 690.
Silk, action of nitric acid on, 60.
—, artificial, 454.
Silk asclepias, 17.
Silk, differentiation of, from artificial, 550.
Silk fibroin, 485.
" Silk finish," producing, 416.
Silk, lustering of, 527.
—, natural, 456.
—, nitrocellulose, 459.
Silk noils, utilizing, 455.
Silk, production of, 563.
Silkoid, 459.
Silkose, 459.
Silk, rendering more hygienic, 325.
—, combed, 478.
—, vegetable, 17.
Silk waste, utilizing, 455.
Silkworms, 469.
Silk blue dye, 732.
Silver bath, preparing, 838.
Silver bromide paper, preparing, 837.
Silver caoutchouc silk, 458.
Silver chromate, 323.
Silver, depositing on celluloid, 719.

Silver emulsion, *see* collodion emulsion.
Silver eoside, 834.
Silverine, 308.
Silver leaf, imitation, 312.
Silver, oxidizing, 719.
Silver paint, 698.
Silver paper, 429.
—, producing, 419.
Silver phosphate emulsion, 885.
Silver salts in photography, 830.
Silver sulphide, 311.
Silver threads, 454.
Sinapic collodion, 823.
Sisal, cellulose nitrates from, 60.
Sizing, viscose for, 1077.
Skins, classes of, 426.
—, coating of, 452.
—, coating with pyroxylin, 429.
—, preserving, 399.
Skiver, 437.
"Skivings," 402.
Slides, toning, 872.
—, varnishing, 873.
—, wet collodion, 869.
Small arms powder, formation of, 916.
Smaragdin, 1035.
Smokeless powders, 899.
Smokeless SS Sporting powder, 960.
Smokeless powder, acetone in, 902.
—, ballistics of, 918.
—, blending, 925.
—, burning, improvement in regularity of, 943.
—, cannon, mfr. of, 943.
—, cannon, transporting, 1143.
—, classification, 901.
—, colloiding mixer, 913.
—, cotton required for 1 lb., 938.
—, cutter for grains, 920.
—, decomposition, optical indicator of, 969.
—, definition of, 1143.
Smokeless diamond powder, 960.
Smokeless powder, drying, 923.
—, early mfr. in U. S., 75:
—, erosion by, 902.
—, ether-alcohol solubility, 902.
—, flameless, 901.
—, Gentieu and Waddell, 957.
—, glazing, 925.
—, grain formation, 915, 916.
—, graphite in, 907.
—, kneading mixer, 913.
—, magnesia in, 958.
—, mfr. in U. S., 902.
—, mfr., Vender process, 958.
—, mixing machine for, 908.
—, moisture, sensitiveness to, 952.
—, nitrogen in, 902.
—, number of factories making, in U. S., 75.
—, perforations in, object of, 918.
—, du Pont, classification, 951.
Smokeless powder, residue, effect on guns, 951.
—, reworking, 938.
—, small arms, transporting, 1143.
—, smoke produced from, 969.
—, solvent expulsion, 924.
—, solvent recovery, 922.
—, sporting, mfr. of, 944.
—, stabilizer for, 907.
Smokeless rifle powders, 941.
Smootching, 395.
Smyrna cotton, *see* cotton, Smyrna.
Snakes, tunicin in, 1.
Snow, artificial, producing, 419.
Soap, transparent, denaturant in, 1128.
Soda viscose, 1077, 1100.
Sodium acetate, 265, 598, 993.
—, from amyl acetate manufacture, 223.
Sodium acid sulphite, as bleach, 1090.
—, viscose coagulant, 1064.
Sodium alcoholate, 240.
Sodium aluminate, 1083.
Sodium amalgam, 1062.
Sodium amylate, 71.
Sodium benzoate, 240, 398, 598, 806.
Sodium bicarbonate, 629.
— in powders, 901.
Sodium bisulphate, 1066.
Sodium busulphite, 479, 1103.
— as denitrifier, 487.
Sodium butyrate, 598.
Sodium camphorate, 598.
Sodium carbonate, 86.
—, purity of, 42.
Sodium cinnamate, 240.
Sodium ethylate, 1036.
—, for cellulose estimation, 71.
Sodium fluoride, 262.
Sodium formate, 246.
Sodium hypophosphite, 598.
Sodium lactate, 598.
Sodium lactophosphate, 599.
Sodium metantimonate, 307.
Sodium metavanadate, 307.
Sodium methylate, 71.
Sodium molybdate, 307.
Sodium monobromfluorescin, 832.
Sodium naphtholate, 240.
Sodium β-naphtholate, 418, 806.
Sodium oxypyruvate, 71.
Sodium *m*-oxytetraethyldiamidotriphenylcarbidrid disulphonate, 1129.
Sodium paratungstate, 307, 338.
Sodium perborate, bleaching by, 585.
Sodium peroxide, bleaching by, 585.
Sodium phenolate, 240.
Sodium phenolosulphonate, 996, 1047, 1048.
Sodium phosphate, 397, 623, 674, 1063,
Sodium potassium tartrate, as stabilizer, 510.
Sodium propionate, 598.
Sodium ricinoleate, 861.

Sodium salicylate, 398, 418, 598, 806.
Sodium sebate, 1035.
Sodium silicate, 397, 596, 623, 674.
Sodium stannite, for cellulose estimation, 71.
Sodium stearate, 240, 796.
Sodium succinate, 599.
Sodium sulphite, 267.
Sodium sulphocarbolate, 388, 418.
Sodium sulphoricinate, 990.
Sodium thiosulphate as denitrifier, 487.
Sodium *p*-toluenesulphonate, 241.
Sodium tungstate, 397, 674, 843.
Sodium valerate, 598.
Sodium vanadate, 1064.
Sodium zincate as cellulose coagulant, 514.
Soie de Paris, 501.
Solanine, effect of collodion on, 814.
Sole leather, artificial, 401.
—, tanning, 428.
—, viscose artificial, 1106.
Solenhofen lithographic stone, imitating, 745.
Solenite, 927.
Solid blue, 451.
Solid brown, 451.
Solid fiber, 749.
Solid green, 451.
Solid spirit, 1035.
Solidified alcohol, 1035.
Solidified spirit, 1035.
Soluble blue, 547.
"Soluble cellulose" method of producing, 76.
Soluble cotton, *see* pyroxylin.
—, for gelatin mfr., 950.
Soluble guncotton, *see* pyroxylin.
Soluble nitrocellulose, *see* pyroxylin.
—, determination in cellulose nitrate, 972.
"Soluble" starch, 1007.
Solubility determinations (of cellulose nitrate), value of, 62.
Solubility of cellulose nitrates, determination of, 62.
Solvent turpentine, 272.
Solvents and non-solvents, 144.
Solvents, elimination of, in plastics, 611.
—, "eventual," 846.
—, expansion, pyroxylin arts by, 144.
—, "final," 846.
—, "hydrous," 846.
—, inflammability of, decreasing, 154.
—, of cellulose formate, 1005.
—, recovered, rectifying, 922.
—, recovery of, 387, 492, 605, 922.
—, recovery of, De Grousillier's method, 387.
—, recovery of, Gray's process, 387.
—, recovery, Kitsee method, 619.
—, recovery of, Liebrecht method, 387.
—, rendering anhydrous, 145.
Solvents, value of, 144.
Solvo, 264.
Solvol, 156.
Sound-record, duplicate, pyroxylin, 733.
Sounding machine, Thompson's, 323.
Sounding tubes, coating, 323.
Spanish leather, 396.
Specific gravity, artificial filaments, 556.
Spectrography, collodion in, 884.
Spectroscopes, lacquering, 329.
Spectroscopy, collodion in, 884.
Spent acid, determination of, 70.
Spermaceti, 262.
Spider hairs, 521.
Spinneret tubes, manufacture of, 470.
Spinning artificial filaments, 526.
Spinning hydrous pyroxylin, 536.
Sponges, mounting of, 328.
Spongiolignine, 362.
Spoons, celluloid inlaid, 698.
Sporting powders, 941, 944.
Springs, celluloid covered, 651.
Sprinkler tops, lacquering, 331.
Spun chappe, 478.
Spun glass, 454.
Stabilite, 798.
Stability of cellulose nitrates, 50.
Stability tests, 968.
Stabilization, 119.
Stabilizers, conditions for satisfactory, 596.
—, for cuprammonium, 510.
—, in pyroxylin plastics, 595.
Stalagmitic alabaster, imitating, 693.
Stannites as denitrifiers, 491.
Stannous chloride, 152, 625.
Stannous salts as denitrifiers, 488.
Starch, 2, 260, 500.
Starch acetate, 1007.
—, properties of, 1009.
—, treating textiles with, 1010.
Starch, acetylation of, 1008.
—, action of dilute nitric acid on, 57.
—, action nitric acid on, 21.
—, dichloracetic esters of, 1008.
Starch formate, 1007.
Starch hexanitrate, 58.
Starch, hydrolysis of, 2.
Starch iodide paper, preparation, 970.
Starch nitrate, 54.
Starch, nitrated, 571.
Starch nitrates, nitrogen and viscosity of, from different origins, 55.
—, stabilizers for, 56.
—, stabilizing, 55.
Starch, simplest mol. wt. of, 25.
Starch tetrabenzoate, 2.
Starch triacetylmonobenzoate, 2.
Starch xanthate, 1111.
—, solvent for dyes, 1111.
Stars, mfr. from celluloid, 689.
Stays, celluloid for, 727.
Steapsin, collodion with, 814.

Stearic acid, 734.
—, chlorinated, 253.
Steatite, 629.
Stearone, 151.
Stearoptens, 235.
Stenciled work, lacquering, 321.
Stereographs, glazing with pyroxylin, 326.
Stereoscopic transparencies, 870.
Stereotype paper, preparation of, 322.
Stevens' Law, 169.
Sthenosage, 538.
Sthenose silk, 538.
—, dyeing, 539.
Sticking plaster, 144, 749.
Still, spirit rectifying, 222.
Stine amyl acetate lamp, 228.
Stocker's unburnable collodion, 625.
Stocking-darners, enameling, 347.
Stop cocks, celluloid, 698.
Storage cells, celluloid, 698.
Storax, 251, 334.
Storing alkali-cellulose, 1077.
Storing viscose, 1077.
Stowite, 949.
Stratified effect, producing in celluloid, 638.
Strawberry essence, 227.
Straw hats, dyeing, 549.
Streaked effects, producing in celluloid, 638.
Streubel's vegetalin, 761.
Stripping collodion, 877.
Stripping collodion negatives, 845.
Stripping films, Lotos, 845.
—, Roy's method, 845.
Strips (wood or metal), celluloid coated, 652.
Strontium bromide, 625.
Strontium butyrate, 599.
Strontium caprylate, 321.
Strontium chloride, 625, 837.
Strontium iodide, 625.
Strontium lactate, 318, 598.
Strychnine denaturants in mfr. of, 1141.
Strychnine valerates, 175.
Studs, celluloid, producing, 662.
Stuffing boxes, celluloid, 698.
Styrol, 399.
Sturtevant blower, 80.
Styptic collodion, 820.
Styracin, *see* cinnamyl cinnamate.
Styracin, 399.
Submarine mines, 966.
Subrit, 699.
Substitutes, India-rubber, 411.
Succinic acid, 691.
Sudan brown dye, 689.
Sudan dyestuffs, 329.
Sudan G, 329, 689.
Sudan GG, 329, 689.
Sudan 4G, 329.
Sudan R, 329.
Sudan RR, 329.
Sudan 5R, 329.
Sudan red dye, 689.
Sugars, 2.
Sulfamidoethyl esters, 256.
Sulfobenzid, 259.
Sulfocarbanilid, 259.
Sulfonal, 259.
Sulphides, as viscose coagulant, 1066.
" Sulphide " colors, 11.
Sulphides as denitrifiers, 491.
Sulphide dyestuffs, 545.
Sulphite as viscose coagulant, 1066.
Sulphocarbonates as denitrifier, 489.
Sulphonated oils, 1034.
Sulphonmethane, denaturant in mfr. of, 1129, 1141.
Sulphoricinic acid, 990.
Sulphoricinoleates, 253.
Sulphoureas, 411.
Sulphovinic acid, 230.
Sulphur, 264.
Sulphur black, 371.
Sulphur chloride, 264, 369, 473.
Sulphur, determination, Hake and Lewis method, 117.
Sulphur dyes, 373.
Sulphurated oil, 367, 400.
Sulphuric acid-cellulose esters, 49.
Sulphuric acid, dehydrating, 137.
Sulphuric anhydride, 135.
Sulphurized linseed oil, 264.
Sulphurous acid, 484.
—, as denitrifier, 487.
Sulphydrates as viscose coagulant, 1066.
Sumatra camphor, 236.
Sun gelignite, 948.
Sunoco spirits, 272.
Supreme paint remover, 264.
Surat cotton, *see* cotton surat.
Surgery, pyroxylin in, 721.
Surgical ligatures, denaturants in mfr. of, 1141.
Surgical plasters, 414.
Surrogate, 406.
Synthetic fusel oil, 189.
Syringa, odor of, 185.
Syringes, celluloid, 729.
Swalite, 949.
Swiss blasting gelatin, 946.

T. powder, 963.
Tagliabue flash tester, 770.
Takadiastase, collodion with, 814.
Takitoff paint remover, 264.
Tallow, 260.
Tamadine, 520, 718.
Tanacetyl hydride, 149.
Tannette, 367, 398.
Tannic acid, denaturants in mfr. of, 1141.
Tannin, 1085.
Tannin heliotrope, 548.

Tannin on cotton, 9.
Tannin orange paste, 549.
Tanning, 427.
—, steps in, 426.
Tanolin, 444.
Taplo, 362.
Tartrazine, 887.
Tartar emetic, 9.
Tartaric acid, 53, 260, 485, 885.
Tawed leather, 428.
Taxite paint remover, 264.
Teasing the cotton, 79.
Temperature of combustion (in powder), reducing, 936, 937.
Tenting, viscose coated, 1106.
Teraconic acid, 878.
Ter-butyl carbinol, 186.
Terpineol butyrate, 240.
Terpineol propionate, 240.
Terpinone, 236.
Terpinyl acetate, 245, 247.
Terrabentine, 272.
Testing, bronzing liquids, 315.
—, celluloid lacquers, 333.
—, lacquers, 324.
—, pyroxylin lacquers, 324.
tetrabromdiphenylamine, 977.
Tetra-acetyldiglucose, 256.
Tetrabenzoate of starch, 2.
Tetracetyllactose, 256.
v-Tetrachlorbenzene, 250.
v-Tetrachlordiamidobenzene, 250.
Tetrachlorethanes, 171, 267.
Tetrachlornaphthol phosphate, 254.
Tetrachlorphenol phosphate, 254.
Tetraethyl monosilicate, 626.
Tetrahydrobenzylketone, 253.
Tetranitrocellulose, 27.
—, formula of, 26.
—, percent nitrogen in, 26.
Tetranitrodiglycerol, 947, 949.
Tetranitrodinaphthyl phosphate, 254.
Tetranitromethane, 171.
Tetranitronaphthalin, 154.
Tetranitrostarch, 56.
Tetraphenyl urea, 255, 596, 597.
Tetrazo brilliant blue 12B, 1128.
Texaderm, 370.
Texol, 262.
Tex-Ta-Dor-No, 419.
—, impregnating with nitrocellulose, 781.
—, printing on, with celluloid, 741.
Textiloid, 362, 414, 485.
"The" Hyatt, 579.
Theater hats, 525.
Thermodin, 259.
Thermometer mfr., denaturant in, 1127.
Thermoplastic, cascin, 764.
Thiazol yellow, 887.
Thinner, for pyroxylin lacquers, 316.
Thiocarbonates, 1058.
Thioflavine S, 548.
Thioflavine T, 548.
Thiogen dyes, 1111.
Thional dyes, 1111.
Thiosulphate as viscose coagulant, 1066.
Thiourea, 56.
Thomas test, 969.
Thomson displacement nitration, 96, 929.
Thomson displacement process, 87.
Thorium oxychloride, 520.
Thread, cellulose acetate coated, 1029.
—, —, imparting brilliance to, 1034.
—, coating, 523.
—, coating with bronzes, 1029.
—, coating with nitrocellulose, 487.
—, glossing by viscose, 1111.
—, viscose coated, 1089.
Three-color gratings, preparing, 680.
Three-color screens, producing, 880.
Thujone, 256.
Thymol, 149, 153, 258, 871, 1013, 1014.
Thymoquinone, 258.
Tin, lacquering, 340.
Tintometer, standardizing lacquers by, 330.
"Tin types," producing, 874.
Tire cement (pyroxylin) 424.
Tobacco, denaturant for, 1128.
Toilet articles, viscoid, 1097.
Tologen, 260.
Tolu, 334.
Tolu balsam, *see* balsam tolu.
Tolu balsam, 305.
Toluene, 169, 987.
p-Toluenesulfamidoacetic acid, 256.
p-Toluenesulfamido ethyl ester, 256.
p-Toluenesulfanilid, 256.
p-Toluenesulfoacidethyl ester, 256.
p-Toluenesulfo-acidphenylether, 256.
p-Toluenesulfo-*p*-chloranilid, 256.
p-Toluenesulfocresol, 256.
p-Toluenesulfo-diphenylamin, 206.
p-Toluenesulfoethylanilid, 256.
p-Toluenesulfomethylanilid, 256.
p-Toluenesulfo-α-naphthol, 256.
p-Toluenesulfo-α-naphthylamin, 256.
p-Toluenesulfo-β-naphthol, 256.
p-Toluenesulfo-β-naphthylamin, 256.
p-Toluenesulfo-*o*-phenetidin, 256.
p-Toluenesulfo-*p*-phenetidin, 256.
p-Toluenesulfo-phenylhydrazin, 256.
p-Toluenesulfo-*o*-toluid, 256.
p-Toluenesulfo-*p*-toluid, 256.
p-Toluenesulphamid, 256.
p-Toluenesulphodiethylamid, 256.
p-Toluenesulphoethylamid, 256.
p-Toluensulpho-*m*-xylidid, 256.
Toluidine, 240, 263, 802.
Toluidine chloride, 1063.
o-Toluidine bisulphate, 1023.
Toluidine oxalate, 56.
p-Toluidinesulphamide, 1016, 1017.
Toluol, 263.

Toluol chlorides, 259.
Toluol, flash point of, 1144.
p-Toluolsulfo chloride, 524.
Toluylenediamine, 249, 250.
Toluylenediamine developed blacks, 11.
Toluylene orange R, 549.
Tolyl acetate, 173.
Tolylidine diacetic ester, 254.
Tolylphenyldimethylpyrazolon, 258.
Tolypryin, 258.
Tolypyrin salicylate, 258.
Tolysal, 258.
Toning slides, 872.
Tonite, heat test for, 980.
Tonite powder, 961.
Tonite No. 2 powder, 961.
Tonite No. 3 powder, 961.
Tonka bean, 149.
Tool handles, celluloid coated, 656.
—, viscoid, 1097.
Tooth brushes, celluloid, mfr. of, 716.
Tooth brush, bristles, producing unequal length of, 716.
Topham turbine system, 536.
Torpedo guncotton, 965.
Tortoise shell, 689.
—, imitation, 689.
—, —, bars of, 638.
—, —, dyestuffs in, 586.
—, welding, 689.
Towel rings, enameling, 347.
Townsend goods, 414.
Toys, lacquer for covering, 297.
—, lacquering, 331, 340.
Trace tests, 969.
Transfer collodion, 844.
Transfer emulsion, 892.
Transfer pictures on celluloid, 744.
Translucene, 343.
Translucent glass, producing, 342.
Transparencies, 869.
—, collodio-chloride emulsion for, 870.
—, Schnitzler's method, 873.
Transparene, 673.
Transpiration, celloidin, detecting with, 796.
Transportation, articles forbidden for, 1142.
Transportation of explosives and inflammables, 1142.
Transporting smokeless powder, 1143.
Trays, celluloid for, 727.
Treacle, 260.
Triacetone-mannitol, 244.
Triacetyldiglucose, 256.
Triacetylmonbenzoate of starch, 2.
Triazo yellow, 548.
Trichloracetates, 598.
Trichloracetic acid, 260, 997.
Trichloraniline, 1021.
as-Trichlorbenzene, 250.
as-Trichlordiamidobenzene, 250.
Trichlorethanes, 171, 1014.
Trichlorethenyiamidine, 255.
Trichlorethyl citrate, 259.
Trichlorethylene, 1014.
Tricresyldinitrodinaphthyl thiophosphate, 254.
Trichlornitromethane, 628.
Trichromatic lantern slides, 879.
Trichrome collodion emulsion, 892.
Tricresyl phosphate, 254.
Tricresyl thiophosphate, 254.
Tricyanotriamide, 120.
Triethyl citrate, 259.
Tri*iso*butyl citrate, 259.
Trimethyl citrate, 259.
Trimethylethylene, 207.
Trinaphthyl phosphate, 254.
Trinaphthyl thiophosphate, 254.
Trinitroanisol, 940.
Trinitrobenzene, 149.
Trinitrobutyltoluene, 186.
Trinitrobutylxylene, 186.
Trinitrocellulose, 25, 27.
—, formula of, 26.
—, per cent nitrogen in, 26.
Trinitroglycerol, 843.
Trinitromethylphenol, 940.
Trinitronaphthalin, 154.
Trinitrophenol, *see* picric acid.
m-Trinitroxylol, 258.
Trional, 259.
Trioses, nitric esters of, 58.
Trioxyacetophenon, 252.
Trioxybenzophenon, 252.
Trioxymethylene, 182, 187, 399, 819.
Triphenyl phosphate, 254, 1013.
Triphenyl thiophosphate, 254.
Tripropyl citrate, 259.
Trisaccharide, 58.
Trisaligenosaligenin, 758.
Tristearin (synthetic), 1035.
Trithiocarbonates, 1058, 1059.
Troisdorf powder, 901, 903, 963.
Trypsin, collodion with, 814.
Tubercle bacilli, staining, 803.
Tuberculosis, cellulose in, 1.
Tubeite, 927.
Tubes, imitation ivory, 684.
—, collapsible, pyroxylin, 322.
—, (collapsible), lacquering, 331.
—, lining with celluloid, 645.
—, plastic, formation, 630.
Tubize silk, 460.
Tung oil, 403.
Tung oil, *see* wood oil.
Tunicata, tunicin in, 1.
Tunicin, occurrence, 1.
Turkey red oil, 368, 372, 471, 1034.
Turmeric, *see* curcuma.
Turmeric, 329, 331.
—, collodion with, 819.
Turmeric yellow, 451.
Turnip, pectocellulose in, 4.
Turpalin, 272.

Turpentine, 613.
Turpentine oil substitutes, manufacture of, 274.
Turpentine, petroleum in, 273.
Turpentine products, distinction between, 274.
Turpentine, spirits of, 303.
—, regenerated, 274.
Turpentine substitutes, 271.
—, analysis of, 273.
Turpteen spirits, 272.
Turquoise blue BB, 548.
Turquoise blue G, 548.
Tussah silk, 551.
Tyrosine, 193.

U. S. Army rifle powder, .30-cal., 953.
U. S. Ordnance, requirements for nitrocellulose mfr., 76.
U. S. Ordnance tests, 969.
U. S. Service powder, oxygen in, 900.
Ulex Europens, nitration of, 61.
Umbrella handles, celluloid coated, 656.
—, celluloid, manufacture, 633.
—, coating, 347.
—, covering with celluloid, 641.
Unburnable collodion, Stocker's, 625.
Unhairing skins, 427.
Uninflammable leather, artificial, 397.
Uninflammable pyroxylin plastics, 624.
Universal belt cement, 424.
Unique powder, 951, 952, 953.
Unona selanica, 628.
Unwashed collodion emulsion, 830.
Uranin, 690, 832.
Uranium nitrate, 872.
Uranium toning, 872.
Urea, 120, 255, 764.
Urea acetate, 597.
Urea, as antacid, 596.
Urea benzoate, 597.
Urea butyrate, 597.
Urea formate, 597.
Urea naphthoate, 597.
Urea nitrate, 596.
Urea propionate, 597.
Urea salicylate, 597.
Urea sulphate, 596, 597.
Urea valerate, 597.
Urethanes, 207, 259.
Urinary centrifuge in solubility determinations, 63.

Valeral, 150.
Valeraldehyde, 207.
Valerianate, *see* valerate.
Valeric acid, 175, 207.
Valeric aldehyde, 189.
Valeric ether, *see* ethyl valerate.
Valerone, *see* dibutyl ketone.
l-Valine, 196.
Vanadium and oxycellulose, 8.
Vandura silk, 517.
Vanillin, 149.
Vapor pressure, of nitrating acids, 83.
Varnigo paint remover, 264.
Varnishing, artificial leather, 393.
—, photographic slides, 783.
Varnish removers, 260, 781.
Varnish, solubility of raw materials in, 170.
Varnish spirits, 272.
Vasculose, 3.
Vaseline, in cordite, 930.
Vases, celluloid, making, 633.
Vat dyestuffs, 1024.
Vegetable down, 17.
Vegetable ededron, 17.
Vegetable ivory, nitration of, 59.
Vegetable pith, nitration of, 60.
Vegetable silk, *see* silk vegetable.
Vegetable wool, 17.
Vegetalin, 761.
Veiling, in photography, prevention of, 831.
Vellum cloth, 404.
Velvet, artificial, 422.
—, brocaded, producing, 393.
Velvril, 412.
Veneer cloth, making, 421.
Veneering, with pyroxylin, 673.
Venetian red, 261.
Venice turpentine, 263, 309, 321, 819.
Veracolor plate, 882.
Verdigris, imitation of, 345.
Vermillion, 809.
Vesuvin, 330, 451.
Vetillard's reagent, 459, 517.
Vibrio butyricus, 190, 197.
Victoria blue B, 548.
Victoria green, 80, 330, 1025.
Victoria yellow, 547.
Vieille powder, 900.
Vieille test, 969.
Vinegar collodion, *see* acetic collodion.
Vinyl trichloride, 171.
Violet 4B, 548.
Violet 3R, 548.
Virgin turpentine, 272.
Viscelline yarn, 1089.
Viscine, 1056.
Viscoid aggregates, 1096.
Viscoid, coloring, 1097.
—, cornices, 1098.
Viscoid dolls' heads, 1098.
Viscoid, handles, etc., 1097.
Viscoid, luster, increasing, 1097.
Viscoid masses, 1096.
Viscol, 1056.
Viscolith, 1056, 1098.
Viscoloid, 38, 748.
Viscose, 1001, 1002, 1004, 1055.
—, action of iodine upon, 1060.
—, aging, *see* viscose maturing.
—, artificial filaments from, 1077.
—, artificial leather from, 1103.

Viscose, balls from, 1099.
—, bleaching of, 1090.
—, filaments breaking strain of, 553.
—, changing to cellulose, 1066.
—, clarification of, 1072.
—, coagulants for, 1066.
—, coagulants, list of, 1063.
—, coagulation of, 1096.
—, coagulating, 1078, 1092.
—, decomposition of, 1076.
—, definition of, 1056.
—, depositing on textiles, 1103.
—, dissolving sulphur from, 1091.
—, dyeing, 1091.
—, "enrichment" of, 1061.
Viscose filaments, bleaching, 1090.
—, coagulation of, 1066.
—, cost, 1078.
—, Delubac process, 1085.
—, employed in, 1087.
—, fixing, 1064.
—, increasing flexibility of, 1064.
—, preventing sticking of, 1083.
—, production aniline black on, 1064.
—, properties, 1085.
—, reversion of, 1063.
—, twisting, 1080.
—, uses, 1087.
—, Waddell's method, 1081.
Viscose films, 1093.
—, as dialyzing membrane, 1093.
—, Chorley process, 1093.
—, continuous, drying, 1095.
Viscose, filter, Ernst and Hamlin, 1073.
—, filtering apparatus (Topham), 1072.
—, filtration of, 1072.
—, fixing, 1062.
—, fixing on textiles, 1108.
—, for explosives, producing, 1068.
—, for films, producing, 1068.
—, formations, Waddel process, 1070.
—, hollow articles from, 1099.
—, in dry powder, preparing, 1091.
—, jellification of, 1096.
—, maturing, 1061.
Viscose, mfr., Stern's process, 1087.
—, mordant of, 1108.
—, original method of mfr., 1055.
—, optical properties, 1077.
—, latex masses, 1099.
—, output of, 562.
—, paint material, 1103.
—, paint remover, 267.
—, photographic films from, 1093.
Viscose plastics, 1084.
Viscose, precipitating, 1062.
—, preparation from sulphite cellulose, 1071.
—, printing with, 1108.
—, producing hydrated cellulose by, 1068.
—, properties, dependent on, 1077.
—, properties of, 1076.
Viscose, for sizing, 1077.
—, purification by acetic acid, 1068.
—, purification by sodium bicarbonate, 1067.
—, purification of, 1066.
—, purifying apparatus for, 1070.
—, purifying, for paper sizing, 1102.
—, removal of air from, 1075.
—, removal of sulphides from, 1069.
—, reversion of, 1061.
—, rubber with, 1099, 1108.
—, "setting" of, 1063.
—, setting solutions for, 1078.
—, sheets of, preparing, 1092.
—, shipping, 1077.
Viscose silk, 1077.
Viscose, silk-like luster with, 781.
—, sizing light papers with, 1099, 1103,
—, spirits of turpentine in mfr. of, 1066.
—, stability of, increasing, 1062.
—, storing, 1077, 1086.
—, substitute for wood and horn, 1107.
—, sulphur dyestuffs for, 1091.
Viscose threads, properties, 1078.
Viscose, viscosity of, 1100.
—, wall paper of, 1106.
—, water in, 1041.
—, "xanthizing," 1062.
Viscosimeter, 64.
—, Redwood, 308.
Viscosity, estimation of, 63.
Viscosity factor, 88.
Viscosity, of cellulose nitrate, *see* cellulose nitrate, viscosity of.
Viscosity of cellulose nitrate solutions, 47.
Vitran, 171, 1027.
Vivier silk, 479.
Vogel collodio-chloride process, 837.
Vollenbruch collodion paper process, 837
Volterra alabaster, imitating, 693.
Von Förster powder, 964.
Vulcanite, 749.
Vulcanized fiber, 18, 520.
Vulcanized oils, 473.
Vulcanized rubber, 19, 798.
Vulcanochrome, 444.

W. A. .30-cal. powder, 951, 952, 953.
Wall coverings, 418.
Wallets, celluloid sheet, 673.
Wall papers, producing in leather, 394.
—, viscose in, 1106.
Walsrode powder, 901, 963.
Walston silk, 550.
—, strength of, 1035.
Waltham Abbey, nitration at, 96.
War blasting gelatin, 948.
Warbles, 439.
Warps, viscose size for, 1102.
Wart collodion, 820.
Washed collodion emulsion, 830.
Wash leather, 428.

Watches, denaturant for, 1129.
—, denaturant in mfr. of, 1141.
Waste acid, recovering, 85.
Water, clarification of, 87.
—, filtration of, 100.
—, in pyroxylin, elimination of, 600, 902.
Watered designs, producing, 423.
Water glass, *see* sodium silicate.
Waterproof signs, celluloid, 673.
Waterproofing compositions, 413.
Waterproofing fabrics, 792.
—, viscose for, 1084.
Waterproofing fuses, 326.
Water, solubility of camphor in, 236.
" Weathered effects " producing, 345.
Weatherproof celluloid signs, 744.
Weaving-mill waste, 39.
Webb's matte baryta paper, 893.
Weber and Cross, 1006.
Welsbach mantles, 352.
Wet collodion, 830.
Wet collodion positives, 873.
Wet collodion slides, 869.
Wetteren powder, 901, 963.
Wetteren Smokeless Military powder, 963.
Whaleboline, 749.
Whalebone, artificial, 521.
Whip handles, celluloid coated, 656.
Whip-stocks, covering with celluloid, 641.
Whiskbroom handles, celluloid coated, 656.
Whistles, celluloid, 664.
White enamels, 332.
Whitehead torpedo, 965.
White mineral jelly, 931.
Wiley extractor, 41.
Will's results on nitrocellulose stability, 53.
Will stability test, 969, 974.
Will's testing apparatus, Robertson modification, 975.
" Willow plumes " producing, 410.
Wijs iodine method, 335.
Wilson finish remover, 270.
Wind breaks (automobile), celluloid, 672.
Window transparencies, producing, 879.
Wine flavors, sebacates in, 148.
Wine yeast, 177.
Wire, coating with cellulose acetate, 1029.
—, insulating with copper acetate, 1029.
—, insulation of, pyroxylin for, 297.
—, lacquering, 331.
Wizard Corn Cure, 820.
Wöllbrink benzine purifier, 205.
Wood cores, covering with celluloid, 641.
Wood, covering with celluloid, 640.
Wood enamels, 346.
Wood-engraving, photographing for, 876.
Wood fiber, 17.
—, nitration of, 61.
Wood fillers, pyroxylin in, 351.
Wood gum tetranitrate, 59.
Wood, lacquering, 337.
Wood naphtha, *see* methyl alcohol.
Wood oil, 305, 403.
—, oxidized, 148.
Wood, photographing on, 876.
—, preserving with pyroxylin, 325.
Wood pulp, nitration of, 61.
—, stability of cellulose nitrates from, 53.
—, use in filament formation, 470.
Wood, reproduction of images on, 886.
Wood spirit, 182.
—, flash point of, 1144.
—, tailings, 182.
Wood, staining, 346.
—, veneering with celluloid, 675.
—, viscose substitute for, 1107.
—, waterproofing, 571.
Wool, carbonizing, 6.
Wool green S, 548.
Wool, rendering more hygienic, 325.
" Wrought black " lacquers, 344.

Xanthates, 1058, 1059.
—, quantitative determination of, 1112.
Xanthic acid, 1059.
Xanthine, 451.
Xanthogenic acid, 1059.
Xanthoproteic acid, 60.
X-rays, protecting from, 417.
Xylene, 169.
Xylidine, 263, 802.
Xylidine chloride, 1063.
Xylids, 258.
Xyloidine, 21, 146, 571.
Xyloidins, 750.
Xyloinite, 569.
Xylol, 263.
Xylon, 13.
Xylonite, 38, 571.
Xylonite varnish, 424.
Xylonith, 748.
Xylose, 58, 750.
Xylose dinitrate, 58.
Xylostyptic ether, 820.
Xylyl acetate, 173.
Xylylene diamine, 249.

Yankee paint remover, 264.
Yarn sizes, measurement of, 542.
Yarns, viscose size for, 1102.
Yellow ocher, 261.

Zalol, 436.
Zapon, 844, 880.
Zaponing, 301.
Zapon lacquers, *see* lacquer, zapon.
Zapon lacquer, 422.
Zapons, 301, 409.

Zëin, 749.
Zellit, 1016.
Zellith, 1016.
Zinc acetate, 598, 1000.
Zinc benzoate, 418.
Zinc bromide, 398, 625.
Zinc butyrate, 598.
Zinc carbolate, 398.
Zinc chloracetate, 598.
Zinc chlorformate, 598.
Zinc chloride, 398, 521, 625.
—, action of, on cellulose, 1.
—, as denaturant, 1140.
—, as stabilizer, 120.
Zinc chloriodide, 8.
Zinc ethide, 187.
Zinc iodide, 398, 521, 625.
Zinc methide, 187.
Zinc monochloracetate, 598.
Zinc oxychloride, 629.
Zinc, printing upon, 845.
Zinc propionate, 598.
Zinc resinate, 423.
Zinc ricinate, 629.
Zinc ricinoleate, 629.
Zinc salicylate, 418.
Zinc stearate, 263.
Zinc sulphide, 332.
Zinc sulphocarbolates, 398, 823.
Zinc valerate, 598.
Zinc viscose, 1100.
Zip paint remover, 264.
Zoöphytes, mounting of, 328.
Zylonite, 38, 572.

D. VAN NOSTRAND COMPANY

23 MURRAY AND 27 WARREN STREETS

New York

SHORT-TITLE CATALOG

OF

Publications and Importations

OF

SCIENTIFIC AND ENGINEERING BOOKS

This list includes the technical publications of the following English publishers:

SCOTT, GREENWOOD & CO. CROSBY LOCKWOOD & SON
CONSTABLE & COMPANY, Ltd. TECHNICAL PUBLISHING CO.
ELECTRICIAN PRINTING & PUBLISHING CO.

for whom D. Van Nostrand Company are American agents.

SHORT-TITLE CATALOG

OF THE

Publications and Importations

OF

D. VAN NOSTRAND COMPANY

23 MURRAY AND 27 WARREN STREETS, N. Y.

Prices marked with an asterisk (*) are NET.
All bindings are in cloth unless otherwise noted.

A B C Code. (See Clausen-Thue.)
Abbott, A. V. The Electrical Transmission of Energy.....8vo, *$5 00
—— A Treatise on Fuel. (Science Series No. 9.).....16mo, 0 50
—— Testing Machines. (Science Series No. 74.).....16mo, 0 50
Adam, P. Practical Bookbinding. Trans. by T. E. Maw.....12mo, *2 50
Adams, J. W. Sewers and Drains for Populous Districts.....8vo, 2 50
Addyman, F. T. Practical X-Ray Work.....8vo, *4 00
A1 Code. (See Clausen-Thue.)
Aikman, C. M. Manures and the Principles of Manuring.....8vo, 2 50
Alexander, J. H. Elementary Electrical Engineering.....12mo, 2 00
—— Universal Dictionary of Weights and Measures.....8vo, 3 50
Allan, W. Strength of Beams Under Transverse Loads. (Science Series No. 19.).....16mo, 0 50
—— Theory of Arches. (Science Series No. 11.).....16mo, 0 50
Allen, H. Modern Power Gas Producer Practice and Applications..12mo, *2 50
—— Gas and Oil Engines.....8vo, *4 50
Anderson, F. A. Boiler Feed Water.....8vo, *2 50
Anderson, Capt. G. L. Handbook for the Use of Electricians.....8vo, 3 00
Anderson, J. W. Prospector's Handbook.....12mo, 1 50
Andés, L. Vegetable Fats and Oils.....8vo, *4 00
—— Animal Fats and Oils. Trans. by C. Salter.....8vo, *4 00
—— Drying Oils, Boiled Oil, and Solid and Liquid Driers.....8vo, *5 00
—— Iron Corrosion, Anti-fouling and Anti-corrosive Paints. Trans. by C. Salter.....8vo, *4 00
—— Oil Colors, and Printers' Ink. Trans. by A. Morris and H. Robson 8vo, *2 50
—— Treatment of Paper for Special Purposes. Trans. by C. Salter..12mo, *2 50
Annual Reports on the Progress of Chemistry.
Vol. I. (1904).....8vo, *2 00
Vol. II. (1905).....8vo, *2 00

Annual Reports on the Progress of Chemistry.
Vol. III. (1906) 8vo, *2 00
Vol. IV. (1907) 8vo, *2 00
Vol. V. (1908) 8vo, *2 00
Vol. VI. (1909) 8vo, *2 00
Argand, M. Imaginary Quantities. Translated from the French by A. S. Hardy. (Science Series No. 52.) 16mo, 0 50
Armstrong, R., and Idell, F. E. Chimneys for Furnaces and Steam Boilers. (Science Series No. 1.) 16mo, 0 50
Arnold, E. Armature Windings of Direct-Current Dynamos. Trans. by F. B. DeGress 8vo, *2 00
Ashe, S. W., and Keiley, J. D. Electric Railways. Theoretically and Practically Treated. Vol. I. Rolling Stock 12mo, *2 50
Ashe, S. W. Electric Railways. Vol. II. Engineering Preliminaries and Direct Current Sub-Stations 12mo, *2 50
—— Electricity: Experimentally and Practically Applied 12mo, *2 00
Atkinson, A. A. Electrical and Magnetic Calculations 8vo, *1 50
Atkinson, J. J. Friction of Air in Mines. (Science Series No. 14.) 16mo, 0 50
Atkinson, J. J., and Williams, Jr., E. H. Gases Met with in Coal Mines. (Science Series No. 13.) 16mo, 0 50
Atkinson, P. The Elements of Electric Lighting 12mo, 1 50
—— The Elements of Dynamic Electricity and Magnetism 12mo, 2 00
—— Power Transmitted by Electricity 12mo, 2 00
Auchincloss, W. S. Link and Valve Motions Simplified 8vo, *1 50
Ayrton, H. The Electric Arc 8vo, *5 00

Bacon, F. W. Treatise on the Richards Steam-Engine Indicator 12mo, 1 00
Bailes, G. M. Modern Mining Practice. Five Volumes ..... 8vo, each, 3 50
Bailey, R. D. The Brewers' Analyst 8vo, *5 00
Baker, A. L. Quaternions ..... 8vo (*In Preparation.*)
Baker, Benj. Pressure of Earthwork. (Science Series No. 56.) 16mo,
Baker, I. O. Levelling. (Science Series No. 91.) 16mo, 0 50
Baker, M. N. Potable Water. (Science Series No. 61.) 16mo, 0 50
—— Sewerage and Sewage Purification. (Science Series No. 18.) 16mo, 0 50
Baker, T. T. Telegraphic Transmission of Photographs 12mo, *1 25
Bale, G. R. Modern Iron Foundry Practice. Two Volumes. 12mo.
Vol. I. Foundry Equipment, Materials Used *2 50
Vol. II. Machine Moulding and Moulding Machines *1 50
Bale, M. P. Pumps and Pumping 12mo, 1 50
Ball, R. S. Popular Guide to the Heavens 8vo, *4 50
—— Natural Sources of Power. (Westminster Series.) 8vo, *2 00
Ball, W. V. Law Affecting Engineers 8vo, *3 50
Bankson, Lloyd. Slide Valve Diagrams. (Science Series No. 108.) 16mo, 0 50
Barba, J. Use of Steel for Constructive Purposes 12mo, 1 00
Barker, A. H. Graphic Methods of Engine Design 12mo, *1 50
Barker, A. Textiles and Their Manufacture. (Westminster Series.) 8vo, 2 00
Barnard, F. A. P. Report on Machinery and Processes of the Industrial Arts and Apparatus of the Exact Sciences at the Paris Universal Exposition, 1867 ..... 8vo, 5 00
Barnard, J. H. The Naval Militiaman's Guide ..... 16mo, leather 1 25
Barnard, Major J. G. Rotary Motion. (Science Series No. 90.) 16mo, 0 50

Barrus, G. H. Boiler Tests.....8vo, *3 00
—— Engine Tests.....8vo, *4 00
The above two purchased together..... *6 00
Barwise, S. The Purification of Sewage.....12mo, 3 50
Baterden, J. R. Timber. (Westminster Series.).....8vo, *2 00
Beadle, C. Chapters on Papermaking. Five Volumes.....12mo, each, *2 00
Beaumont, R. Color in Woven Design.....8vo, 7 50
—— Finishing of Textile Fabrics.....8vo, *4 00
Beaumont, W. W. The Steam-Engine Indicator.....8vo, 2 50
Bedell, F., and Pierce, C. A. Direct and Alternating Current Testing..8vo, *2 00
Beech, F. Dyeing of Cotton Fabrics.....8vo, *3 00
—— Dyeing of Woolen Fabrics.....8vo, *3 50
Beckwith, A. Pottery.....8vo, paper, 0 60
Begtrup, J. The Slide Valve.....8vo, *2 00
Bender, C. E. Continuous Bridges. (Science Series No. 26.).....16mo, 0 50
—— Proportions of Piers used in Bridges. (Science Series No. 4.) 16mo, 0 50
Bennett, H. G. The Manufacture of Leather.....8vo, *4 50
Bernthsen, A. A Text-book of Organic Chemistry. Trans. by G. M'Gowan.....12mo, *2 50
Berry, W. J. Differential Equations of the First Species. 12mo (*In Preparation.*)
Bersch, J. Manufacture of Mineral and Lake Pigments. Trans. by A. C. Wright.....8vo, *5 00
Bertin, L. E. Marine Boilers. Trans. by L. S. Robertson.....8vo, 5 00
Beveridge, J. Papermaker's Pocket Book.....12mo, *4 00
Binns, C. F. Ceramic Technology.....8vo, *5 00
—— Manual of Practical Potting.....8vo, *7 50
—— The Potter's Craft.....12mo, *2 00
Birchmore, W. H. How to Use a Gas Analysis.....12mo, *1 25
Blaine, R. G. The Calculus and Its Applications.....12mo, *1 50
Blake, W. H. Brewers' Vade Mecum.....8vo, *4 00
Blake, W. P. Report upon the Precious Metals.....8vo, 2 00
Bligh, W. G. The Practical Design of Irrigation Works.....8vo, *6 00
Blyth, A. W. Foods: Their Composition and Analysis.....8vo, 7 50
—— Poisons: Their Effects and Detection.....8vo, 7 50
Böckmann, F. Celluloid.....12mo, *2 50
Bodmer, G. R. Hydraulic Motors and Turbines.....12mo, 5 00
Boileau, J. T. Traverse Tables.....8vo, 5 00
Bonney, G. E. The Electro-platers' Handbook.....12mo, 1 20
Booth, W. H. Water Softening and Treatment.....8vo, *2 50
—— Superheaters and Superheating and Their Control.....8vo, *1 50
Bottcher, A. Cranes: Their Construction, Mechanical Equipment and Working. Trans. by A. Tolhausen.....4to, *10 00
Bottler, M. Modern Bleaching Agents. Trans. by C. Salter.....12mo, *2 50
Bottone, S. R. Magnetos for Automobilists.....12mo, *1 00
Boulton, S. B. Preservation of Timber. (Science Series No. 82.).16mo, 0 50
Bourgougnon, A. Physical Problems. (Science Series No. 113.)..16mo, 0 50
Bourry, E. Treatise on Ceramic Industries. Trans. by W. P. Rix...8vo, (*In Press.*).....
Bow, R. H. A Treatise on Bracing.....8vo, 1 50
Bowie, A. J., Jr. A Practical Treatise on Hydraulic Mining.....8vo, 5 00

Bowker, W. R. Dynamo, Motor and Switchboard Circuits.....8vo, *2 50
Bowles, O. Tables of Common Rocks. (Science Series No. 125.)..16mo, 0 50
Bowser, E. A. Elementary Treatise on Analytic Geometry.....12mo, 1 75
—— Elementary Treatise on the Differential and Integral Calculus.12mo, 2 25
—— Elementary Treatise on Analytic Mechanics.....12mo, 3 00
—— Elementary Treatise on Hydro-mechanics.....12mo, 2 50
—— A Treatise on Roofs and Bridges.....12mo, *2 25
Boycott, G. W. M. Compressed Air Work and Diving.....8vo, *4 00
Bragg, E. M. Marine Engine Design.....12mo, *2 00
Brainard, F. R. The Sextant. (Science Series No. 101.).....16mo,
Brassey's Naval Annual for 1910.....8vo, *6 00
Brew, W. Three-Phase Transmission.....8vo, *2 00
Brewer, R. W. A. The Motor Car.....12mo, *2 00
Briggs, R., and Wolff, A. R. Steam-Heating. (Science Series No. 67.).....16mo, 0 50
Bright, C. The Life Story of Sir Charles Tilson Bright.....8vo, *4 50
British Standard Sections.....8x15 *1 00
Complete list of this series (45 parts) sent on application.
Broughton, H. H. Electric Cranes and Hoists.....(*In Press.*)
Brown, G. Healthy Foundations. (Science Series No. 80.).....16mo, 0 50
Brown, H. Irrigation.....8vo, *5 00
Brown, Wm. N. The Art of Enameiling on Metal.....12mo, *1 00
—— Handbook on Japanning and Enamelling.....12mo, *1 50
—— House Decorating and Painting.....12mo, *1 50
—— History of Decorative Art.....12mo, *1 25
—— Dipping, Burnishing, Lacquering and Bronzing Brass Ware...12mo, *1 00
—— Workshop Wrinkles.....8vo, *1 00
Browne, R. E. Water Meters. (Science Series No. 81.).....16mo, 0 50
Bruce, E. M. Pure Food Tests.....12mo, *1 25
Bruhns, Dr. New Manual of Logarithms.....8vo, half morocco, 2 50
Brunner, R. Manufacture of Lubricants, Shoe Polishes and Leather Dressings. Trans. by C. Salter.....8vo, *3 00
Buel, R. H. Safety Valves. (Science Series No. 21.).....16mo, 0 50
Bulman, H. F., and Redmayne, R. S. A. Colliery Working and Management.....8vo, 6 00
Burgh, N. P. Modern Marine Engineering.....4to, half morocco, 10 00
Burt, W. A. Key to the Solar Compass.....16mo, leather, 2 50
Burton, F. G. Engineering Estimates and Cost Accounts.....12mo, *1 50
Buskett, E. W. Fire Assaying.....12mo, *1 25

Cain, W. Brief Course in the Calculus.....12mo, *1 75
—— Elastic Arches. (Science Series No. 48.).....16mo, 0 50
—— Maximum Stresses. (Science Series No. 38.).....16mo, 0 50
—— Practical Designing Retaining of Walls. (Science Series No. 3.)16mo, 0 50
—— Theory of Steel-concrete Arches and of Vaulted Structures. (Science Series No. 42.).....16mo, 0 50
—— Theory of Voussoir Arches. (Science Series No. 12.).....16mo, 0 50
—— Symbolic Algebra. (Science Series No. 73.).....16mo, 0 50
Campin, F. The Construction of Iron Roofs.....8vo, 2 00
Carpenter, F. D. Geographical Surveying. (Science Series No. 37.).16mo,
Carpenter, R. C., and Diederichs, H. Internal Combustion Engines.8vo, *5 00

Carter, E. T. Motive Power and Gearing for Electrical Machinery . . 8vo, *5 00
Carter, H. A. Ramie (Rhea), China Grass 12mo, *2 00
Carter, H. R. Modern Flax, Hemp, and Jute Spinning 8vo, *3 00
Cathcart, W. L. Machine Design. Part I. Fastenings 8vo, *3 00
Cathcart, W. L., and Chaffee, J. I. Elements of Graphic Statics 8vo, *3 00
Caven, R. M., and Lander, G. D. Systematic Inorganic Chemistry . 12mo, *2 00
Chambers' Mathematical Tables 8vo, 1 75
Charnock, G. F. Workshop Practice. (Westminster Series.) . . . . 8vo (*In Press.*)
Charpentier, P. Timber 8vo, *6 00
Chatley, H. Principles and Designs of Aeroplanes. (Science Series. No. 126.) 16mo, 0 50
—— How to Use Water Power 12mo, *1 00
Child, C. T. The How and Why of Electricity 12mo, 1 00
Christie, W. W. Boiler-waters, Scale, Corrosion, Foaming 8vo, *3 00
—— Chimney Design and Theory 8vo, *3 00
—— Furnace Draft. (Science Series No. 123.) 16mo, 0 50
Church's Laboratory Guide. Rewritten by Edward Kinch 8vo, *2 50
Clapperton, G. Practical Papermaking 8vo, 2 50
Clark, C. H. Marine Gas Engines . . . . . (*In Press.*)
Clark, D. K. Rules, Tables and Data for Mechanical Engineers 8vo, 5 00
—— Fuel: Its Combustion and Economy 12mo, 1 50
—— The Mechanical Engineer's Pocketbook 16mo, 2 00
—— Tramways: Their Construction and Working 8vo, 7 50
Clark, J. M. New System of Laying Out Railway Turnouts 12mo, 1 00
Clausen-Thue, W. A B C Telegraphic Code. Fourth Edition 12mo, *5 00
Fifth Edition 8vo, *7 00
—— The A 1 Telegraphic Code 8vo, *7 50
Cleemann, T. M. The Railroad Engineer's Practice 12mo, *1 50
Clerk, D., and Idell, F. E. Theory of the Gas Engine. (Science Series No. 62.) 16mo, 0 50
Clevenger, S. R. Treatise on the Method of Government Surveying. 16mo, morocco 2 50
Clouth, F. Rubber, Gutta-Percha, and Balata 8vo, *5 00
Coffin, J. H. C. Navigation and Nautical Astronomy 12mo, *3 50
Colburn, Z., and Thurston, R. H. Steam Boiler Explosions. (Science Series No. 2.) 16mo, 0 50
Cole, R. S. Treatise on Photographic Optics 12mo, 2 50
Coles-Finch, W. Water, Its Origin and Use 8vo, *5 00
Collins, J. E. Useful Alloys and Memoranda for Goldsmiths, Jewelers. 16mo 0 50
Constantine, E. Marine Engineers, Their Qualifications and Duties . . 8vo, *2 00
Coombs, H. A. Gear Teeth. (Science Series No. 120.) 16mo, 0 50
Cooper, W. R. Primary Batteries 8vo, *4 00
—— "The Electrician" Primers 8vo, *5 00
Copperthwaite, W. C. Tunnel Shields 4to, *9 00
Corey, H. T. Water Supply Engineering . . . . . 8vo (*In Press.*)
Corfield, W. H. Dwelling Houses. (Science Series No. 50.) 16mo, 0 50
—— Water and Water-Supply. (Science Series No. 17.) 16mo, 0 50
Cornwall, H. B. Manual of Blow-pipe Analysis 8vo, *2 50
Courtney, C. F. Masonry Dams 8vo, 3 50
Cowell, W. B. Pure Air, Ozone, and Water 12mo, *2 00

Craig, T. Motion of a Solid in a Fuel. (Science Series No. 49.)....16mo, 0 50
—— Wave and Vortex Motion. (Science Series No. 43.).....16mo, 0 50
Cramp, W. Continuous Current Machine Design.....8vo, *2 50
Crocker, F. B. Electric Lighting. Two Volumes. 8vo.
Vol. I. The Generating Plant..... 3 00
Vol. II. Distributing Systems and Lamps..... 3 00
Crocker, F. B., and Arendt, M. Electric Motors.....8vo, *2 50
Crocker, F. B., and Wheeler, S. S. The Management of Electrical Machinery.....12mo, *1 00
Cross, C. F., Bevan, E. J., and Sindall, R. W. Wood Pulp and Its Applications. (Westminster Series.).....8vo (*In Press.*)
Crosskey, L. R. Elementary Perspective.....8vo, 1 00
Crosskey, L. R., and Thaw, J. Advanced Perspective.....8vo, 1 50
Culley, J. L. Theory of Arches. (Science Series No. 87.).....16mo, 0 50

Davenport, C. The Book. (Westminster Series.).....8vo, *2 00
Davies, E. H. Machinery for Metalliferous Mines.....8vo, 8 00
Davies, D. C. Metalliferous Minerals and Mining.....8vo, 5 00
—— Earthy Minerals and Mining.....8vo, 5 00
Davies, F. H. Electric Power and Traction.....8vo, *2 00
Dawson, P. Electric Traction on Railways.....8vo, *9 00
Day, C. The Indicator and Its Diagrams.....12mo, *2 00
Deerr, N. Sugar and the Sugar Cane.....8vo, *3 00
Deite, C. Manual of Soapmaking. Trans. by S. T. King.....4to, *5 00
De la Coux, H. The Industrial Uses of Water. Trans. by A. Morris..8vo, *4 50
Del Mar, W. A. Electric Power Conductors.....8vo, *2 00
Denny, G. A. Deep-level Mines of the Rand.....4to, *10 00
—— Diamond Drilling for Gold..... *5 00
De Roos, J. D. C. Linkages. (Science Series No. 47.).....16mo, 0 50
De Varona, A. Sewer Gases. (Science Series No. 55.).....16mo, 0 50
Derr, W. L. Block Signal Operation .....Oblong 12mo, *1 50
Desaint, A. Three Hundred Shades and How to Mix Them.....8vo, *10 00
Dibdin, W. J. Public Lighting by Gas and Electricity.....8vo, *8 00
—— Purification of Sewage and Water.....8vo, 6 50
Dieterich, K. Analysis of Resins, Balsams, and Gum Resins.....8vo, *3 00
Dinger, Lieut. H. C. Care and Operation of Naval Machinery.....12mo, *2 00
Dixon, D. B. Machinist's and Steam Engineer's Practical Calculator. 16mo, morocco, 1 25
Doble, W. A. Power Plant Construction on the Pacific Coast (*In Press.*)
Dodd, G. Dictionary of Manufactures, Mining, Machinery, and the Industrial Arts.....12mo, 1 50
Dorr, B. F. The Surveyor's Guide and Pocket Table-book. 16mo, morocco, 2 00
Down, P. B. Handy Copper Wire Table.....16mo, *1 00
Draper, C. H. Elementary Text-book of Light, Heat and Sound...12mo, 1 00
—— Heat and the Principles of Thermo-dynamics.....12mo, 1 50
Duckwall, E. W. Canning and Preserving of Food Products.....8vo, *5 00
Dumesny, P., and Noyer, J. Wood Products, Distillates, and Extracts. 8vo, *4 50
Duncan, W. G., and Penman, D. The Electrical Equipment of Collieries. 8vo, *4 00

Duthie, A. L. Decorative Glass Processes. (Westminster Series.)..8vo, *2 00
Dyson, S. S. Practical Testing of Raw Materials.....8vo, *5 00

Eccles, R. G., and Duckwall, E. W. Food Preservatives.....8vo, 1 00
Paper..... 0 50
Eddy, H. T. Researches in Graphical Statics.....8vo, 1 50
—— Maximum Stresses under Concentrated Loads.....8vo, 1 50
Edgcumbe, K. Industrial Electrical Measuring Instruments.....8vo, *2 50
Eissler, M. The Metallurgy of Gold.....8vo 7 50
—— The Hydrometallurgy of Copper.....8vo, *4 50
—— The Metallurgy of Silver.....8vo, 4 00
—— The Metallurgy of Argentiferous Lead.....8vo, 5 00
—— Cyanide Process for the Extraction of Gold.....8vo, 3 00
—— A Handbook on Modern Explosives.....8vo, 5 00
Ekin, T. C. Water Pipe and Sewage Discharge Diagrams.....folio, *3 00
Eliot, C. W., and Storer, F. H. Compendious Manual of Qualitative Chemical Analysis.....12mo, *1 25
Elliot, Major G. H. European Light-house Systems.....8vo, 5 00
Ennis, Wm. D. Linseed Oil and Other Seed Oils.....8vo, *4 00
—— Applied Thermodynamics.....8vo *4 50
Erfurt, J. Dyeing of Paper Pulp. Trans. by J. Hubner.....8vo, *7 50
Erskine-Murray, J. A Handbook of Wireless Telegraphy.....8vo, *3 50
Evans, C. A. Macadamized Roads.....(*In Press.*)
Ewing, A. J. Magnetic Induction in Iron.....8vo, *4 00

Fairie, J. Notes on Lead Ores.....12mo, *1 00
—— Notes on Pottery Clays.....12mo, *1 50
Fairley, W., and Andre, Geo. J. Ventilation of Coal Mines. (Science Series No. 58.).....16mo, 0 50
Fairweather, W. C. Foreign and Colonial Patent Laws.....8vo, *3 00
Fanning, J. T. Hydraulic and Water-supply Engineering.....8vo, *5 00
Fauth, P. The Moon in Modern Astronomy. Trans. by J. McCabe. 8vo, *2 00
Fay, I. W. The Coal-tar Colors.....8vo (*In Press.*)
Fernbach, R. L. Glue and Gelatine.....8vo, *3 00
Fischer, E. The Preparation of Organic Compounds. Trans. by R. V. Stanford.....12mo, *1 25
Fish, J. C. L. Lettering of Working Drawings .....Oblong 8vo, 1 00
Fisher, H. K. C., and Darby, W. C. Submarine Cable Testing.....8vo, *3 50
Fiske, Lieut. B. A. Electricity in Theory and Practice.....8vo, 2 50
Fleischmann, W. The Book of the Dairy. Trans. by C. M. Aikman. 8vo, 4 00
Fleming, J. A. The Alternate-current Transformer. Two Volumes. 8vo.
Vol. I. The Induction of Electric Currents..... *5 00
Vol. II. The Utilization of Induced Currents..... *5 00
—— Centenary of the Electrical Current.....8vo, *0 50
—— Electric Lamps and Electric Lighting.....8vo, *3 00
—— Electrical Laboratory Notes and Forms.....4to, *5 00
—— A Handbook for the Electrical Laboratory and Testing Room. Two Volumes .....8vo, each, *5 00
Fluery, H. The Calculus Without Limits or Infinitesimals. Trans. by C. O. Mailloux.....(*In Press.*)

Flynn, P. J. Flow of Water. (Science Series No. 84.).....16mo, 0 50
—— Hydraulic Tables. (Science Series No. 66.).....16mo, 0 50
Foley, N. British and American Customary and Metric Measures..folio, *3 00
Foster, H. A. Electrical Engineers' Pocket-book. (*Sixth Edition.*)
12mo, leather, 5 00
Foster, Gen. J. G. Submarine Blasting in Boston (Mass.) Harbor....4to, 3 50
Fowle, F. F. Overhead Transmission Line Crossings.....12mo, *1 50
—— The Solution of Alternating Current Problems.....8vo (*In Press.*)
Fox, W. G. Transition Curves. (Science Series No. 110.).....16mo, 0 50
Fox, W., and Thomas, C. W. Practical Course in Mechanical Drawing.....12mo, 1 25
Foye, J. C. Chemical Problems. (Science Series No. 69.).....16mo, 0 50
—— Handbook of Mineralogy. (Science Series No. 86.).....16mo, 0 50
Francis, J. B. Lowell Hydraulic Experiments.....4to, 15 00
Frye, A. I. Civil Engineers' Pocket-book.....(*In Press.*)
Fuller, G. W. Investigations into the Purification of the Ohio River.4to, *10 00
Furnell, J. Paints, Colors, Oils, and Varnishes.....8vo, *1 00

Gant, L. W. Elements of Electric Traction.....8vo, *2 50
Garcke, E., and Fells, J. M. Factory Accounts.....8vo, 3 00
Garforth, W. E. Rules for Recovering Coal Mines after Explosions and Fires.....12mo, leather, 1 50
Gaudard, J. Foundations. (Science Series No. 34.).....16mo, 0 50
Gear, H. B., and Williams, P. F. Electric Central Station Distributing Systems.....8vo (*In Preparation.*)
Geerligs, H. C. P. Cane Sugar and Its Manufacture.....8vo, *5 00
Geikie, J. Structural and Field Geology.....8vo, *4 00
Gerber, N. Analysis of Milk, Condensed Milk, and Infants' Milk-Food. 8vo, 1 25
Gerhard, W. P. Sanitation, Watersupply and Sewage Disposal of Country Houses.....12mo, *2 00
—— Gas Lighting. (Science Series No. 111.).....16mo, 0 50
—— Household Wastes. (Science Series No. 97.).....16mo, 0 50
—— House Drainage. (Science Series No. 63.).....16mo, 0 50
—— Sanitary Drainage of Buildings. (Science Series No. 93.)....16mo, 0 50
Gerhardi, C. W. H. Electricity Meters.....8vo, *4 00
Geschwind, L. Manufacture of Alum and Sulphates. Trans. by C. Salter.....8vo, *5 00
Gibbs, W. E. Lighting by Acetylene.....12mo, *1 50
—— Physics of Solids and Fluids. (Carnegie Technical School's Textbooks.)..... *1 50
Gibson, A. H. Hydraulics and Its Application.....8vo, *5 00
—— Water Hammer in Hydraulic Pipe Lines.....12mo, *2 00
Gilbreth, F. B. Motion Study.....12mo, *2 00
Gillmore, Gen. Q. A. Limes, Hydraulic Cements and Mortars.....8vo, 4 00
—— Roads, Streets, and Pavements.....12mo, 2 00
Golding, H. A. The Theta-Phi Diagram.....12mo, *1 25
Goldschmidt, R. Alternating Current Commutator Motor.....8vo, *3 00
Goodchild, W. Precious Stones. (Westminster Series.).....8vo, *2 00
Goodeve, T. M. Textbook on the Steam-engine.....12mo, 2 00
Gore, G. Electrolytic Separation of Metals.....8vo, *3 50
Gould, E. S. Arithmetic of the Steam-engine.....12mo, 1 00

Gould, E. S. Calculus. (Science Series No. 112.)....16mo, 0 50
—— High Masonry Dams. (Science Series No. 22.)....16mo, 0 50
—— Practical Hydrostatics and Hydrostatic Formulas. (Science Series No. 117.)....16mo, 0 50
Grant, J. Brewing and Distilling. (Westminster Series.) 8vo (*In Press.*)
Gray, J. Electrical Influence Machines....12mo, 2 00
Greenwood, E. Classified Guide to Technical and Commercial Books. 8vo, *3 00
Gregorius, R. Mineral Waxes. Trans. by C. Salter....12mo, *3 00
Griffiths, A. B. A Treatise on Manures....12mo, 3 00
—— Dental Metallurgy....8vo, *3 50
Gross, E. Hops....8vo, *4 50
Grossman, J. Ammonia and Its Compounds....12mo, *1 25
Groth, L. A. Welding and Cutting Metals by Gases or Electricity....8vo, *3 00
Grover, F. Modern Gas and Oil Engines....8vo, *2 00
Gruner, A. Power-loom Weaving....8vo, *3 00
Güldner, Hugo. Internal Combustion Engines. Trans. by H. Diederichs. 4to, *10 00
Gunther, C. O. Integration....12mo, *1 25
Gurden, R. L. Traverse Tables....folio, half morocco, 7 50
Guy, A. E. Experiments on the Flexure of Beams....8vo, *1 25

Haeder, H. Handbook on the Steam-engine. Trans. by H. H. P. Powles....12mo, 3 00
Hainbach, R. Pottery Decoration. Trans. by C. Slater....12mo, *3 00
Hale, W. J. Calculations of General Chemistry....12mo, *1 00
Hall, C. H. Chemistry of Paints and Paint Vehicles....12mo, *2 00
Hall, R. H. Governors and Governing Mechanism....12mo, *2 00
Hall, W. S. Elements of the Differential and Integral Calculus....8vo, *2 25
—— Descriptive Geometry....8vo volume and a 4to atlas, *3 50
Haller, G. F., and Cunningham, E. T. The Tesla Coil....12mo, *1 25
Halsey, F. A. Slide Valve Gears....12mo, 1 50
—— The Use of the Slide Rule. (Science Series No. 114.)....16mo, 0 50
—— Worm and Spiral Gearing. (Science Series No. 116.)....16mo, 0 50
Hamilton, W. G. Useful Information for Railway Men....16mo, 1 00
Hammer, W. J. Radium and Other Radio-active Substances....8vo, *1 00
Hancock, H. Textbook of Mechanics and Hydrostatics....8vo, 1 50
Hardy, E. Elementary Principles of Graphic Statics....12mo, *1 50
Harper, W. B. Utilization of Wood Waste by Distillation....4to, *3 00
Harrison, W. B. The Mechanics' Tool-book....12mo, 1 50
Hart, J. W. External Plumbing Work....8vo, *3 00
—— Hints to Plumbers on Joint Wiping....8vo, *3 00
—— Principles of Hot Water Supply....8vo, *3 00
—— Sanitary Plumbing and Drainage....8vo, *3 00
Haskins, C. H. The Galvanometer and Its Uses....16mo, 1 50
Hatt, J. A. H. The Colorist....square 12mo, *1 50
Hausbrand, E. Drying by Means of Air and Steam. Trans. by A. C. Wright....12mo, *2 00
—— Evaporating, Condensing and Cooling Apparatus. Trans. by A. C. Wright....8vo, *5 00
Hausner, A. Manufacture of Preserved Foods and Sweetmeats. Trans. by A. Morris and H. Robson....8vo, *3 00

Hawke, W. H. Premier Cipher Telegraphic Code....4to, *5 00
—— 100,000 Words Supplement to the Premier Code....4to, *5 00
Hawkesworth, J. Graphical Handbook for Reinforced Concrete Design. 4to, *2 50
Hay, A. Alternating Currents....8vo, *2 50
—— Principles of Alternate-current Working....12mo, 2 00
—— Electrical Distributing Networks and Distributing Lines....8vo, *3 50
—— Continuous Current Engineering....8vo, *2 50
Heap, Major D. P. Electrical Appliances....8vo, 2 00
Heaviside, O. Electromagnetic Theory. Two Volumes....8vo, each, *5 00
Heck, R. C. H. Steam-Engine and Other Steam Motors. Two Volumes.
Vol. I. Thermodynamics and the Mechanics....8vo, *3 50
Vol. II. Form, Construction, and Working....8vo, *5 00
—— Abridged edition of above volumes (Elementary)....8vo (*In Preparation.*)
—— Notes on Elementary Kinematics....8vo, boards, *1 00
—— Graphics of Machine Forces....8vo, boards, *1 00
Hedges, K. Modern Lightning Conductors....8vo, 3 00
Heermann, P. Dyers' Materials. Trans. by A. C. Wright....12mo, *2 50
Hellot, Macquer and D'Apligny. Art of Dyeing Wool, Silk and Cotton. 8vo, *2 00
Henrici, O. Skeleton Structures....8vo, 1 50
Hermann, F. Painting on Glass and Porcelain....8vo, *3 50
Herrmann, G. The Graphical Statics of Mechanism. Trans. by A. P. Smith....12mo, 2 00
Herzfeld, J. Testing of Yarns and Textile Fabrics....8vo, *3 50
Hildebrandt, A. Airships, Past and Present....8vo, *3 50
Hildenbrand, B. W. Cable-Making. (Science Series No. 32.)....16mo, 0 50
Hill, J. W. The Purification of Public Water Supplies. New Edition. (*In Press.*)
—— Interpretation of Water Analysis....(*In Press.*)
Hiroi, I. Plate Girder Construction. (Science Series No. 95.)....16mo, 0 50
—— Statically-Indeterminate Stresses....12mo, *2 00
Hirshfeld, C. F. Engineering Thermodynamics. (Science Series No. 45.) 16mo, 0 50
Hobart, H. M. Heavy Electrical Engineering....8vo, *4 50
—— Electricity....8vo, *2 00
—— Electric Trains....8vo, *2 50
Hobbs, W. R. P. The Arithmetic of Electrical Measurements....12mo, 0 50
Hoff, J. N. Paint and Varnish Facts and Formulas....12mo, *1 50
Hoff, Com. W. B. The Avoidance of Collisions at Sea....16mo, morocco, 0 75
Hole, W. The Distribution of Gas....8vo, *7 50
Holley, A. L. Railway Practice....folio, 12 00
Holmes, A. B. The Electric Light Popularly Explained....12mo, paper, 0 50
Hopkins, N. M. Experimental Electrochemistry....8vo, *3 00
—— Model Engines and Small Boats....12mo, 1 25
Hopkinson, J. Shoolbred, J. N., and Day, R. E. Dynamic Electricity. (Science Series No. 71.)....16mo, 0 50
Horner, J. Engineers' Turning....8vo, *3 50
—— Metal Turning....12mo, 1 50
—— Toothed Gearing....12mo, 2 25
Houghton, C. E. The Elements of Mechanics of Materials....12mo, *2 00
Houllevique, L. The Evolution of the Sciences....8vo, *2 00

Howe, G. Mathematics for the Practical Man.....12mo, *1 25
Howorth, J. Repairing and Riveting Glass, China and Earthenware. 8vo, paper, *0 50
Hubbard, E. The Utilization of Wood-waste.....8vo, *2 50
Humber, W. Calculation of Strains in Girders.....12mo, 2 50
Humphreys, A. C. The Business Features of Engineering Practice. . 8vo, *1 25
Hurst, G. H. Handbook of the Theory of Color.....8vo, *2 50
—— Dictionary of Chemicals and Raw Products.....8vo, *3 00
—— Lubricating Oils, Fats and Greases.....8vo, *3 00
—— Soaps.....8vo, *5 00
—— Textile Soaps and Oils.....8vo, *2 50
Hurst, H. E., and Lattey, R. T. Text-book of Physics.....8vo, *3 00
Hutchinson R. W., Jr. Long Distance Electric Power Transmission. 12mo, *3 00
Hutchinson, R. W., Jr., and Ihlseng, M. C. Electricity in Mining. . 12mo, (*In Press*)
Hutchinson, W. B. Patents and How to Make Money Out of Them. 12mo, 1 25
Hutton, W. S. Steam-boiler Construction.....8vo, 6 00
—— Practical Engineer's Handbook.....8vo, 7 00
—— The Works' Manager's Handbook.....8vo, 6 00
Hyde, E. W. Skew Arches. (Science Series No. 15.).....16mo, 0 50

Induction Coils. (Science Series No. 53.).....16mo, 0 50
Ingle, H. Manual of Agricultural Chemistry.....8vo, *3 00
Innes, C. H. Problems in Machine Design.....12mo, *2 00
—— Air Compressors and Blowing Engines.....12mo, *2 00
—— Centrifugal Pumps.....12mo, *2 00
—— The Fan.....12mo, *2 00
Isherwood, B. F. Engineering Precedents for Steam Machinery.....8vo, 2 50
Ivatts, E. B. Railway Management at Stations.....8vo, *2 50

Jacob, A., and Gould, E. S. On the Designing and Construction of Storage Reservoirs. (Science Series No. 6.).....16mo, 0 50
Jamieson, A. Text Book on Steam and Steam Engines.....8vo, 3 00
—— Elementary Manual on Steam and the Steam Engine.....12mo, 1 50
Jannettaz, E. Guide to the Determination of Rocks. Trans. by G. W. Plympton.....12mo, 1 50
Jehl, F. Manufacture of Carbons.....8vo, *4 00
Jennings, A. S. Commercial Paints and Painting. (Westminster Series.) 8vo (*In Press.*)
Jennison, F. H. The Manufacture of Lake Pigments.....8vo, *3 00
Jepson, G. Cams and the Principles of their Construction.....8vo, *1 50
—— Mechanical Drawing.....8vo (*In Preparation.*)
Jockin, W. Arithmetic of the Gold and Silversmith.....12mo, *1 00
Johnson, G. L. Photographic Optics and Color Photography.....8vo, *3 00
Johnson, W. H. The Cultivation and Preparation of Para Rubber...8vo, *3 00
Johnson, W. McA. The Metallurgy of Nickel.....(*In Preparation.*)
Johnston, J. F. W., and Cameron, C. Elements of Agricultural Chemistry and Geology.....12mo, 2 60
Joly, J. Raidoactivity and Geology.....12mo, *3 00
Jones, H. C. Electrical Nature of Matter and Radioactivity.....12mo, *2 00

Jones, M. W. Testing Raw Materials Used in Paint.....12mo, *2 00
Jones, L., and Scard, F. I. Manufacture of Cane Sugar.....8vo, *5 00
Joy, G. A., and Thiess, J. B. Toll Telephone Practice.....(*In Press.*)
Joynson, F. H. Designing and Construction of Machine Gearing....8vo, 2 00
Jüptner, H. F. V. Siderology: The Science of Iron.....8vo, *5 00

Kansas City Bridge.....4to, 6 00
Kapp, G. Alternate Current Machinery. (Science Series No. 96.).16mo, 0 50
—— Dynamos, Motors, Alternators and Rotary Converters. Trans. by H. H. Simmons.....8vo, 4 00
—— Electric Transmission of Energy.....12mo, 3 50
Keim, A. W. Prevention of Dampness in Buildings.....8vo, *2 00
Keller, S. S. Mathematics for Engineering Students. 12mo, half leather.
Algebra and Trigonometry, with a Chapter on Vectors..... *1 75
Special Algebra Edition..... *1 00
Plane and Solid Geometry..... *1 25
Analytical Geometry and Calculus..... *2 00
Kelsey, W. R. Continuous-current Dynamos and Motors.....8vo, *2 50
Kemble, W. T., and Underhill, C. R. The Periodic Law and the Hydrogen Spectrum.....8vo, paper, *0 50
Kemp, J. F. Handbook of Rocks.....8vo, *1 50
Kendall, E. Twelve Figure Cipher Code.....4to, *15 00
Kennedy, A. B. W., and Thurston, R. H. Kinematics of Machinery. (Science Series No. 54.).....16mo, 0 50
Kennedy, A. B. W., Unwin, W. C., and Idell, F. E. Compressed Air. (Science Series No. 106.).....16mo, 0 50
Kennedy, R. Modern Engines and Power Generators. Six Volumes. 4to, 15 00
Single Volumes.....each, 3 00
—— Electrical Installations. Five Volumes.....4to, 15 00
Single Volumes.....each, 3 50
—— Flying Machines; Practice and Design.....12mo, *2 00
Kennelly, A. E. Electro-dynamic Machinery.....8vo, 1 50
Kent, W. Strength of Materials. (Science Series No. 41.).....16mo, 0 50
Kershaw, J. B. C. Fuel, Water and Gas Analysis.....8vo, *2 50
—— Electrometallurgy. (Westminster Series.).....8vo, *2 00
Kershaw, J. B. C. The Electric Furnace in Iron and Steel Production. 12mo, *1 50
Kingdon, J. A. Applied Magnetism.....8vo, *3 00
Kinzbrunner, C. Alternate Current Windings.....8vo, *1 50
—— Continuous Current Armatures.....8vo, *1 50
—— Testing of Alternating Current Machines.....8vo, *2 00
Kirkaldy, W. G. David Kirkaldy's System of Mechanical Testing....4to, 10 00
Kirkbride, J. Engraving for Illustration.....8vo, *1 50
Kirkwood, J. P. Filtration of River Waters.....4to, 7 50
Klein, J. F. Design of a High-speed Steam-engine.....8vo, *5 00
—— Physical Significance of Entropy.....8vo, *1 50
Kleinhans, F. B. Boiler Construction.....8vo, 3 00
Knight, Lieut.-Com. A. M. Modern Seamanship.....8vo, *6 00
Half morocco..... *7 50
Knox, W. F. Logarithm Tables.....(*In Preparation.*)
Knott, C. G., and Mackay, J. S. Practical Mathematics.....8vo, 2 00

Koester, F. Steam-Electric Power Plants....4to, *5 00
—— Hydroelectric Developments and Engineering....4to, *5 00
Koller, T. The Utilization of Waste Products....8vo, *3 50
—— Cosmetics....8vo, *2 50
Krauch, C. Testing of Chemical Reagents. Trans. by J. A. Williamson and L. W. Dupre....8vo, *3 00

Lambert, T. Lead and its Compounds....8vo, *3 50
—— Bone Products and Manures....8vo, *3 00
Lamborn, L. L. Cottonseed Products....8vo, *3 00
—— Modern Soaps, Candles, and Glycerin....8vo, *7 50
Lamprecht, R. Recovery Work After Pit Fires. Trans. by C. Salter..8vo, *4 00
Lanchester, F. W. Aerial Flight. Two Volumes. 8vo.
Vol. I. Aerodynamics.... *6 00
Vol. II. Aerodonetics.... *6 00
Larner, E. T. Principles of Alternating Currents....12mo, *1 25
Larrabee, C. S. Cipher and Secret Letter and Telegraphic Code....16mo, 0 60
La Rue, B. F. Swing Bridges. (Science Series No. 107.)....16mo, 0 50
Lassar-Cohn, Dr. Modern Scientific Chemistry. Trans. by M. M. Pattison Muir....12mo, *2 00
Latimer, L. H., Field, C. J., and Howell, J. W. Incandescent Electric Lighting. (Science Series No. 57.)....16mo, 0 50
Latta, M. N. Handbook of American Gas-Engineering Practice....8vo, *4 50
—— American Producer Gas Practice....4to, *6 00
Leask, A. R. Breakdowns at Sea....12mo, 2 00
—— Triple and Quadruple Expansion Engines....12mo, 2 00
—— Refrigerating Machinery....12mo, 2 00
Lecky, S. T. S. "Wrinkles" in Practical Navigation....8vo, *8 00
Le Doux, M. Ice-Making Machines. (Science Series No. 46.)....16mo, 0 50
Leeds, C. C. Mechanical Drawing for Trade Schools....oblong 4to,
High School Edition.... *1 25
Machinery Trades Edition.... *2 00
Lefévre, L. Architectural Pottery. Trans. by H. K. Bird and W. M. Binns....4to, *7 50
Lehner, S. Ink Manufacture. Trans. by A. Morris and H. Robson..8vo, *2 50
Lemstrom, S. Electricity in Agriculture and Horticulture....8vo, *1 50
Le Van, W. B. Steam-Engine Indicator. (Science Series No. 78.)..16mo, 0 50
Lewes, V. B. Liquid and Gaseous Fuels. (Westminster Series.)....8vo, *2 00
Lieber, B. F. Lieber's Standard Telegraphic Code....8vo, *10 00
—— Code. German Edition....8vo, *10 00
—— —— Spanish Edition....8vo, *10 00
—— —— French Edition....8vo, *10 00
—— Terminal Index....8vo, *2 50
—— Lieber's Appendix....folio, *15 00
—— —— Handy Tables....4to, *2 50
—— Bankers and Stockbrokers' Code and Merchants and Shippers' Blank Tables....8vo, *15 00
—— 100,000,000 Combination Code....8vo, *15 00
—— Engineering Code....8vo, *10 00
Livermore, V. P., and Williams, J. How to Become a Competent Motorman....12mo, *1 00

Livingstone, R. Design and Construction of Commutators.....8vo, *2 25
Lobben, P. Machinists' and Draftsmen's Handbook.....8vo, 2 50
Locke, A. G. and C. G. Manufacture of Sulphuric Acid.....8vo, 10 00
Lockwood, T. D. Electricity, Magnetism, and Electro-telegraph. 8vo, 2 50
—— Electrical Measurement and the Galvanometer.....12mo, 1 50
Lodge, O. J. Elementary Mechanics.....12mo, 1 50
—— Signalling Across Space without Wires.....8vo, *2 00
Lord, R. T. Decorative and Fancy Fabrics.....8vo, *3 50
Loring, A. E. A Handbook of the Electromagnetic Telegraph.....16mo, 0 50
—— Handbook. (Science Series No. 39.).....16mo, 0 50
Lowenstein, L. C., and Crissey, C. P. Centrifugal Pumps....(*In Press.*)
Lucke, C. E. Gas Engine Design.....8vo, *3 00
—— Power Plants: their Design, Efficiency, and Power Costs. 2 vols. (*In Preparation.*)
—— Power Plant Papers. Form I. The Steam Power Plant.....paper, *1 50
Lunge, G. Coal-tar and Ammonia. Two Volumes.....8vo, *15 00
—— Manufacture of Sulphuric Acid and Alkali. Three Volumes....8vo,
Vol. I. Sulphuric Acid. In two parts..... *15 00
Vol. II. Salt Cake, Hydrochloric Acid and Leblanc Soda. In two parts..... *15 00
Vol. III. Ammonia Soda..... *15 00
—— Technical Chemists' Handbook.....12mo, leather, *3 50
—— Technical Methods of Chemical Analysis. Trans. by C. A. Keane. in collaboration with the corps of specialists.
Vol. I. In two parts.....8vo, *15 00
Vols. II and III.....(*In Preparation.*)
Lupton, A., Parr, G. D. A., and Perkin, H. Electricity as Applied to Mining.....8vo, *4 50
Luquer, L. M. Minerals in Rock Sections.....8vo, *1 50

Macewen, H. A. Food Inspection.....8vo, *2 50
Mackenzie, N. F. Notes on Irrigation Works.....8vo, *2 50
Mackie, J. How to Make a Woolen Mill Pay.....8vo, *2 00
Mackrow, C. Naval Architect's and Shipbuilder's Pocket-book. 16mo, leather, 5 00
Maguire, Capt. E. The Attack and Defense of Coast Fortifications...8vo, 2 50
Maguire, Wm. R. Domestic Sanitary Drainage and Plumbing.....8vo, 4 00
Mallet, A. Compound Engines. Trans. by R. R. Buel. (Science Series No. 10.).....16mo,
Mansfield, A. N. Electro-magnets. (Science Series No. 64.).....16mo, 0 50
Marks, E. C. R. Construction of Cranes and Lifting Machinery....12mo, *1 50
—— Construction and Working of Pumps.....12mo, *1 50
—— Manufacture of Iron and Steel Tubes.....12mo, *2 00
—— Mechanical Engineering Materials.....12mo, *1 00
Marks, G. C. Hydraulic Power Engineering.....8vo, 3 50
—— Inventions, Patents and Designs.....12mo, *1 00
Markham, E. R. The American Steel Worker.....12mo, 2 50
Marlow, T. G. Drying Machinery and Practice.....8vo, *5 00
Marsh, C. F. Concise Treatise on Reinforced Concrete.....8vo, *2 50
Marsh, C. F., and Dunn, W. Reinforced Concrete.....4to, *5 00

Marsh, C. F., and Dunn, W. Manual of Reinforced Concrete and Concrete Block Construction.....16mo, morocco, *2 50
Massie, W. W., and Underhill, C. R. Wireless Telegraphy and Telephony. 12mo, *1 00
Matheson, D. Australian Saw-Miller's Log and Timber Ready Reckoner. 12mo, leather, 1 50
Mathot, R. E. Internal Combustion Engines.....8vo, *6 00
Maurice, W. Electric Blasting Apparatus and Explosives.....8vo, *3 50
—— Shot Firer's Guide.....8vo, *1 50
Maxwell, J. C. Matter and Motion. (Science Series No. 36.).....16mo, 0 50
Maxwell, W. H., and Brown, J. T. Encyclopedia of Municipal and Sanitary Engineering.....4to, *10 00
Mayer, A. M. Lecture Notes on Physics.....8vo, 2 00
McCullough, R. S. Mechanical Theory of Heat.....8vo, 3 50
McIntosh, J. G. Technology of Sugar.....8vo, *4 50
—— Industrial Alcohol.....8vo, *3 00
—— Manufacture of Varnishes and Kindred Industries. Three Volumes. 8vo.
Vol. I. Oil Crushing, Refining and Boiling..... *3 50
Vol. II. Varnish Materials and Oil Varnish Making..... *4 00
Vol. III.....(*In Preparation.*)
McKnight, J. D., and Brown, A. W. Marine Multitubular Boilers..... *1 50
McMaster, J. B. Bridge and Tunnel Centres. (Science Series No. 20.) 16mo, 0 50
McMechen, F. L. Tests for Ores, Minerals and Metals.....12mo, *1 00
McNeill, B. McNeill's Code.....8vo, *6 00
McPherson, J. A. Water-works Distribution.....8vo, 2 50
Melick, C. W. Dairy Laboratory Guide.....12mo, *1 25
Merck, E. Chemical Reagents; Their Purity and Tests.....8vo, *1 50
Merritt, Wm. H. Field Testing for Gold and Silver.....16mo, leather, 1 50
Meyer, J. G. A., and Pecker, C. G. Mechanical Drawing and Machine Design.....4to, 5 00
Michell, S. Mine Drainage.....8vo, 10 00
Mierzinski, S. Waterproofing of Fabrics. Trans. by A. Morris and H. Robson.....8vo, *2 50
Miller, E. H. Quantitative Analysis for Mining Engineers.....8vo, *1 50
Miller, G. A. Determinants. (Science Series No. 105.).....16mo,
Milroy, M. E. W. Home Lace-making.....12mo, *1 00
Minifie, W. Mechanical Drawing.....8vo, *4 00
Mitchell, C. A., and Prideaux, R. M. Fibres Used in Textile and Allied Industries.....8vo,
Modern Meteorology.....12mo, 1 50
Monckton, C. C. F. Radiotelegraphy. (Westminster Series.).....8vo, *2 00
Monteverde, R. D. Vest Pocket Glossary of English-Spanish, Spanish-English Technical Terms.....64mo, leather, *1 00
Moore, E. C. S. New Tables for the Complete Solution of Ganguillet and Kutter's Formula.....8vo, *5 00
Moreing, C. A., and Neal, T. New General and Mining Telegraph Code, 8vo, *5 00
Morgan, A. P. Wireless Telegraph Apparatus for Amateurs.....12mo, *1 50
Moses, A. J. The Characters of Crystals.....8vo, *2 00
Moses, A. J., and Parsons, C. L. Elements of Mineralogy.....8vo, *2 50

Moss, S. A. Elements of Gas Engine Design. (Science Series No. 121.) 16mo, 0 50
—— The Lay-out of Corliss Valve Gears. (Science Series No. 119.) 16mo, 0 50
Mullin, J. P. Modern Moulding and Pattern-making 12mo, 2 50
Munby, A. E. Chemistry and Physics of Building Materials. (Westminster Series.) 8vo, *2 00
Murphy, J. G. Practical Mining 16mo, 1 00
Murray, J. A. Soils and Manures. (Westminster Series.) 8vo, *2 00

Naquet, A. Legal Chemistry 12mo, 2 00
Nasmith, J. The Student's Cotton Spinning 8vo, 3 00
Neilson, R. M. Aeroplane Patents 8vo, *2 00
Nerz, F. Searchlights. Trans. by C. Rodgers 8vo, *3 00
Neuberger, H., and Noalhat, H. Technology of Petroleum. Trans. by J. G. McIntosh 8vo, *10 00
Newall, J. W. Drawing, Sizing and Cutting Bevel-gears 8vo, 1 50
Newlands, J. Carpenters and Joiners' Assistant folio, half morocco, 15 00
Nicol, G. Ship Construction and Calculations 8vo, *4 50
Nipher, F. E. Theory of Magnetic Measurements 12mo, 1 00
Nisbet, H. Grammar of Textile Design 8vo, *3 00
Nolan, H. The Telescope. (Science Series No. 51.) 16mo, 0 50
Noll, A. How to Wire Buildings 12mo, 1 50
Nugent, E. Treatise on Optics 12mo, 1 50

O'Connor, H. The Gas Engineer's Pocketbook 12mo, leather, 3 50
—— Petrol Air Gas 12mo, *0 75
Ohm, G. S., and Lockwood, T. D. Galvanic Circuit. Translated by William Francis. (Science Series No. 102.) 16mo, 0 50
Olsson, A. Motor Control, in Turret Turning and Gun Elevating. (U. S. Navy Electrical Series, No. 1.) 12mo, paper, *0 50
Olsen, J. C. Text-book of Quantitative Chemical Analysis 8vo, *4 00
Oudin, M. A. Standard Polyphase Apparatus and Systems 8vo, *3 00

Palaz, A. Industrial Photometry. Trans. by G. W. Patterson, Jr. 8vo, *4 00
Pamely, C. Colliery Manager's Handbook 8vo, *10 00
Parr, G. D. A. Electrical Engineering Measuring Instruments 8vo, *3 50
Parry, E. J. Chemistry of Essential Oils and Artificial Perfumes 8vo, *5 00
Parry, E. J., and Coste, J. H. Chemistry of Pigments 8vo, *4 50
Parry, L. A. Risk and Dangers of Various Occupations 8vo, *3 00
Parshall, H. F., and Hobart, H. M. Armature Windings 4to, *7 50
—— Electric Railway Engineering 4to, *10 00
Parshall, H. F., and Parry, E. Electrical Equipment of Tramways (*In Press.*)
Parsons, S. J. Malleable Cast Iron 8vo, *2 50
Passmore, A. C. Technical Terms Used in Architecture 8vo, *3 50
Patterson, D. The Color Printing of Carpet Yarns 8vo, *3 50
—— Color Matching on Textiles 8vo, *3 00
—— The Science of Color Mixing 8vo, *3 00
Patton, H. B. Lecture Notes on Crystallography 8vo, *1 25
Paulding, C. P. Condensation of Steam in Covered and Bare Pipes 8vo, *2 00
—— Transmission of Heat through Cold-storage Insulation 12mo, *1 00
Peirce, B. System of Analytic Mechanics 4to, 10 00
Pendred, V. The Railway Locomotive. (Westminster Series.) 8vo, *2 00
Perkin, F. M. Practical Methods of Inorganic Chemistry 12mo, *1 00

Perrigo, O. E. Change Gear Devices....8vo, 1 00
Perrine, F. A. C. Conductors for Electrical Distribution....8vo, *3 50
Petit, G. White Lead and Zinc White Paints....8vo, *1 50
Petit, R. How to Build an Aeroplane. Trans. by T. O'B. Hubbard, and J. H. Ledeboer....8vo, *1 50
Pettit, Lieut. J. S. Graphic Processes. (Science Series No. 76.)...16mo, 0 50
Perry, J. Applied Mechanics....8vo, *2 50
Philbrick, P. H. Beams and Girders. (Science Series No. 88.)...16mo,
Phillips, J. Engineering Chemistry....8vo, *4 50
—— Gold Assaying....8vo, *2 50
—— Dangerous Goods....8vo, 3 50
Phin, J. Seven Follies of Science....12mo, *1 25
—— Household Pests, and How to Get Rid of Them....8vo (*In Preparation.*)
Pickworth, C. N. The Indicator Handbook. Two Volumes..12mo, each, 1 50
—— Logarithms for Beginners....12mo, boards, 0 50
—— The Slide Rule....12mo, 1 00
Plane Table, The....8vo, 2 00
Plattner's Manual of Blow-pipe Analysis. Eighth Edition, revised. Trans. by H. B. Cornwall....8vo, *4 00
Plympton, G. W. The Aneroid Barometer. (Science Series No. 35.) 16mo, 0 50
—— How to become an Engineer. (Science Series No. 100.)....16mo, 0 50
—— Van Nostrand's Table Book. (Science Series No. 104.)....16mo, 0 50
Pochet, M. L. Steam Injectors. Translated from the French. (Science Series No. 29.)....16mo, 0 50
Pocket Logarithms to Four Places. (Science Series No. 65.)....16mo, 0 50
leather, 1 00
Pope, F. L. Modern Practice of the Electric Telegraph....8vo, 1 50
Popplewell, W. C. Elementary Treatise on Heat and Heat Engines..12mo, *3 00
—— Prevention of Smoke....8vo, *3 50
—— Strength of Materials....8vo, *1 75
Potter, T. Concrete....8vo, *3 00
Practical Compounding of Oils, Tallow and Grease....8vo, *3 50
Practical Iron Founding....12mo, 1 50
Pray, T., Jr. Twenty Years with the Indicator....8vo, 2 50
—— Steam Tables and Engine Constant....8vo, 2 00
—— Calorimeter Tables....8vo, 1 00
Preece, W. H. Electric Lamps....(*In Press.*)
Prelini, C. Earth and Rock Excavation....8vo, *3 00
—— Graphical Determination of Earth Slopes....8vo, *2 00
—— Tunneling....8vo, 3 00
—— Dredging. A Practical Treatise....(*In Press.*)
Prescott, A. B. Organic Analysis....8vo, 5 00
Prescott, A. B., and Johnson, O. C. Qualitative Chemical Analysis...8vo, *3 50
Prescott, A. B., and Sullivan, E. C. First Book in Qualitative Chemistry. 12mo, *1 50
Pritchard, O. G. The Manufacture of Electric-light Carbons..8vo, paper, *0 60
Prost, E. Chemical Analysis of Fuels, Ores, Metals. Trans. by J. C. Smith....8vo, *4 50
Pullen, W. W. F. Application of Graphic Methods to the Design of Structures....12mo, *2 50
—— Injectors: Theory, Construction and Working....12mo, *1 50

Pulsifer, W. H. Notes for a History of Lead.....8vo, 4 00
Purchase, W. R. Masonry.....12mo, *3 00
Putsch, A. Gas and Coal-dust Firing.....8vo, *3 00
Pynchon, T. R. Introduction to Chemical Physics.....8vo, 3 00

Rafter G. W. Mechanics of Ventilation. (Science Series No. 33.).16mo, 0 50
—— Potable Water. (Science Series No. 103.).....16mo, 0 50
—— Treatment of Septic Sewage. (Science Series No. 118.).....16mo, 0 50
Rafter, G. W., and Baker, M. N. Sewage Disposal in the United States.4to, *6 00
Raikes, H. P. Sewage Disposal Works.....8vo, *4 00
Railway Shop Up-to-Date.....4to, 2 00
Ramp, H. M. Foundry Practice.....(*In Press.*)
Randall, P. M. Quartz Operator's Handbook.....12mo, 2 00
Randau, P. Enamels and Enamelling.....8vo, *4 00
Rankine, W. J. M. Applied Mechanics.....8vo, 5 00
—— Civil Engineering.....8vo, 6 50
—— Machinery and Millwork.....8vo, 5 00
Rankine, W. J. M. The Steam-engine and Other Prime Movers.....8vo, 5 00
—— Useful Rules and Tables.....8vo, 4 00
Rankine, W. J. M., and Bamber, E. F. A Mechanical Text-book....8vo, 3 50
Raphael, F. C. Localization of Faults in Electric Light and Power Mains. 8vo, *3 00
Rathbone, R. L. B. Simple Jewellery.....8vo, *2 00
Rateau, A. Flow of Steam through Nozzles and Orifices. Trans. by H. B. Brydon.....8vo, *1 50
Rausenberger, F. The Theory of the Recoil of Guns.....8vo, *4 50
Rautenstrauch, W. Notes on the Elements of Machine Design, 8vo, boards, *1 50
Rautenstrauch, W., and Williams, J. T. Machine Drafting and Empirical Design.
Part I. Machine Drafting.....8vo, *1 25
Part II. Empirical Design.....(*In Preparation.*)
Raymond, E. B. Alternating Current Engineering.....12mo, *2 50
Rayner, H. Silk Throwing and Waste Silk Spinning.....8vo, *2 50
Recipes for the Color, Paint, Varnish, Oil, Soap and Drysaltery Trades.8vo, *3 50
Recipes for Flint Glass Making.....12mo, *4 50
Redwood, B. Petroleum. (Science Series No. 92.).....16mo, 0 50
Reed's Engineers' Handbook.....8vo, *5 00
—— Key to the Nineteenth Edition of Reed's Engineers' Handbook..8vo, *3 00
—— Useful Hints to Sea-going Engineers.....12mo, 1 50
—— Marine Boilers.....12mo, 2 00
Reinhardt, C. W. Lettering for Draftsmen, Engineers, and Students. oblong 4to, boards, 1 00
—— The Technic of Mechanical Drafting.....oblong 4to, boards, *1 00
Reiser, F. Hardening and Tempering of Steel. Trans. by A. Morris and H. Robson.....12mo, *2 50
Reiser, N. Faults in the Manufacture of Woolen Goods. Trans. by A. Morris and H. Robson.....8vo, *2 50
—— Spinning and Weaving Calculations.....8vo, *5 00
Renwick, W. G. Marble and Marble Working.....8vo, 5 00
Reynolds, O., and Idell, F. E. Triple Expansion Engines. (Science Series No. 99.).....16mo, 0 50

Rhead, G. F. Simple Structural Woodwork.....12mo, *1 00
Rice, J. M., and Johnson, W. W. A New Method of Obtaining the Differential of Functions.....12mo, 0 50
Richardson, J. The Modern Steam Engine.....8vo, *3 50
Richardson, S. S. Magnetism and Electricity.....12mo, *2 00
Rideal, S. Glue and Glue Testing.....8vo, *4 00
Rings, F. Concrete in Theory and Practice.....12mo, *2 50
Ripper, W. Course of Instruction in Machine Drawing.....folio, *6 00
Roberts, F. C. Figure of the Earth. (Science Series No. 79.).....16mo, 0 50
Roberts, J., Jr. Laboratory Work in Electrical Engineering.....8vo, *2 00
Robertson, L. S. Water-tube Boilers.....8vo, 3 00
Robinson, J. B. Architectural Composition.....8vo, *2 50
Robinson, S. W. Practical Treatise on the Teeth of Wheels. (Science Series No. 24.).....16mo, 0 50
—— Railroad Economics. (Science Series No. 59.).....16mo, 0 50
—— Wrought Iron Bridge Members. (Science Series No. 60.).....16mo, 0 50
Roebling, J. A. Long and Short Span Railway Bridges.....folio, 25 00
Rogers, A. A Laboratory Guide of Industrial Chemistry.....12mo, *1 50
Rogers, A., and Aubert, A. B. Industrial Chemistry.....(*In Press.*)
Rogers, F. Magnetism of Iron Vessels. (Science Series No. 30.)..16mo, 0 50
Rollins, W. Notes on X-Light.....8vo, *7 50
Rose, J. The Pattern-makers' Assistant.....8vo, 2 50
—— Key to Engines and Engine-running.....12mo, 2 50
Rose, T. K. The Precious Metals. (Westminster Series.).....8vo, *2 00
Rosenhain, W. Glass Manufacture. (Westminster Series.).....8vo, *2 00
Ross, W. A. Plowpipe in Chemistry and Metallurgy.....12mo, *2 00
Rossiter, J. T. Steam Engines. (Westminster Series.)....8vo (*In Press.*)
—— Pumps and Pumping Machinery. (Westminster Series.)..8vo (*In Press.*)
Roth. Physical Chemistry.....8vo, *2 00
Rouillion, L. The Economics of Manual Training.....8vo, 2 00
Rowan, F. J. Practical Physics of the Modern Steam-boiler.....8vo, 7 50
Rowan, F. J., and Idell, F. E. Boiler Incrustation and Corrosion. (Science Series No. 27.).....16mo, 0 50
Roxburgh, W. General Foundry Practice.....8vo, *3 50
Ruhmer, E. Wireless Telephony. Trans. by J. Erskine-Murray....8vo, *3 50
Russell, A. Theory of Electric Cables and Networks.....8vo, *3 00

Sabine, R. History and Progress of the Electric Telegraph.....12mo, 1 25
Saeltzer, A. Treatise on Acoustics.....12mo, 1 00
Salomons, D. Electric Light Installations. 12mo.
Vol. I. The Management of Accumulators..... 2 50
Vol. II. Apparatus..... 2 25
Vol. III. Applications..... 1 50
Sanford, P. G. Nitro-explosives.....8vo, *4 00
Saunders, C. H. Handbook of Practical Mechanics.....16mo, 1 00
leather, 1 25
Saunnier, C. Watchmaker's Handbook.....12mo, 3 00
Sayers, H. M. Brakes for Tram Cars.....8vo, *1 25
Scheele, C. W. Chemical Essays.....8vo, *2 00
Schellen, H. Magneto-electric and Dynamo-electric Machines.....8vo, 5 00
Scherer, R. Casein. Trans. by C. Salter.....8vo, *3 00

Schmall, C. N. First Course in Analytic Geometry, Plane and Solid. 12mo, half leather, *1 75
Schmall, C. N., and Shack, S. M. Elements of Plane Geometry....12mo, *1 25
Schmeer, L. Flow of Water.....8vo, *3 00
Schumann, F. A Manual of Heating and Ventilation.....12mo, leather, 1 50
Schwarz, E. H. L. Causal Geology.....8vo, *2 50
Schweizer, V., Distillation of Resins.....8vo, *3 50
Scott, W. W. Qualitative Analysis. A Laboratory Manual.....8vo, *1 50
Scribner, J. M. Engineers' and Mechanics' Companion...16mo, leather, 1 50
Searle, G. M. "Sumners' Method." Condensed and Improved. (Science Series No. 124.).....16mo, 0 50
Seaton, A. E. Manual of Marine Engineering.....8vo, 6 00
Seaton, A. E., and Rounthwaite, H. M. Pocket-book of Marine Engineering.....16mo, leather, 3 00
Seeligmann, T., Torrilhon, G. L., and Falconnet, H. India Rubber and Gutta Percha. Trans. by J. G. McIntosh.....8vo, *5 00
Seidell, A. Solubilities of Inorganic and Organic Substances.....8vo, *3 00
Sellew, W. H. Steel Rails.....4to (*In Press.*)
Senter, G. Outlines of Physical Chemistry.....12mo, *1 50
Sever, G. F. Electric Engineering Experiments.....8vo, boards, *1 00
Sever, G. F., and Townsend, F. Laboratory and Factory Tests in Electrical Engineering.....8vo, *2 50
Sewall, C. H. Wireless Telegraphy.....8vo, *2 00
—— Lessons in Telegraphy.....12mo, *1 00
Sewell, T. Elements of Electrical Engineering.....8vo, *3 00
—— The Construction of Dynamos.....8vo, *3 00
Sexton, A. H. Fuel and Refractory Materials.....12mo, *2 50
—— Chemistry of the Materials of Engineering.....12mo, *2 50
—— Alloys (Non-Ferrous).....8vo, *3 00
—— The Metallurgy of Iron and Steel.....8vo, *6 50
Seymour, A. Practical Lithography.....8vo, *2 50
—— Modern Printing Inks.....8vo, *2 00
Shaw, Henry S. H. Mechanical Integrators. (Science Series No. 83.) 16mo, 0 50
Shaw, P. E. Course of Practical Magnetism and Electricity.....8vo, *1 00
Shaw, S. History of the Staffordshire Potteries.....8vo, *3 00
—— Chemistry of Compounds Used in Porcelain Manufacture.....8vo, *5 00
Sheldon, S., and Hausmann, E. Direct Current Machines.....8vo, *2 50
Sheldon, S., Mason, H., and Hausmann, E. Alternating-current Machines. 8vo, *2 50
Sherer, R. Casein. Trans. by C. Salter.....8vo, *3 00
Sherriff, F. F. Oil Merchants' Manual.....12mo, *3 50
Shields, J. E. Notes on Engineering Construction.....12mo, 1 50
Shock, W. H. Steam Boilers.....4to, half morocco, 15 00
Shreve, S. H. Strength of Bridges and Roofs.....8vo, 3 50
Shunk, W. F. The Field Engineer.....12mo, morocco, 2 50
Simmons, W. H., and Appleton, H. A. Handbook of Soap Manufacture. 8vo, *3 00
Simms, F. W. The Principles and Practice of Leveling.....8vo, 2 00
—— Practical Tunneling.....8vo, 7 50
Simpson, G. The Naval Constructor.....12mo, morocco, *5 50

Sinclair, A. Development of the Locomotive Engine ...8vo, half leather, 5 00
Sindall, R. W. Manufacture of Paper. (Westminster Series.).....8vo, *2 00
Sloane, T. O'C. Elementary Electrical Calculations.....12mo, *2 00
Smith, C. F. Practical Alternating Currents and Testing.....8vo, *2 50
—— Practical Testing of Dynamos and Motors.....8vo, *2 00
Smith, F. E. Handbook of General Instruction for Mechanics....12mo, 1 50
Smith, I. W. The Theory of Deflections and of Latitudes and Departures. 16mo, morocco, 3 00
Smith, J. C. Manufacture of Paint.....8vo, *3 00
Smith, W. Chemistry of Hat Manufacturing.....12mo, *3 00
Snell, A. T. Electric Motive Power.....8vo, *4 00
Snow, W. G. Pocketbook of Steam Heating and Ventilation. (*In Press.*)
Snow, W. G., and Nolan, T. Ventilation of Buildings. (Science Series No. 5.).....16mo, 0 50
Soddy, F. Radioactivity. 8vo, *3 00
Solomon, M. Electric Lamps. (Westminster Series.).....8vo, *2 00
Sothern, J. W. The Marine Steam Turbine.....8vo, *5 00
Soxhlet, D. H. Dyeing and Staining Marble. Trans. by A. Morris and H. Robson.....8vo, *2 50
Spang, H .W. A Practical Treatise on Lightning Protection.....12mo, 1 00
Spangenburg, L. Fatigue of Metals. Translated by S. H. Shreve. (Science Series No. 23.).....16mo, 0 50
Specht, G. J., Hardy, A. S., McMaster, J. B., and Walling. Topographical Surveying. (Science Series No. 72.).....16mo, 0 50
Speyers, C. L. Text-book of Physical Chemistry.....8vo, *2 25
Stahl, A. W. Transmission of Power. (Science Series No. 28.)...16mo,
Stahl, A. W., and Woods, A. T. Elementary Mechanism 12mo, *2 00
Staley, C., and Pierson, G. S. The Separate System of Sewerage....8vo, *3 00
Standage, H. C. Leatherworkers' Manual.....8vo, *3 50
—— Sealing Waxes, Wafers, and Other Adhesives.....8vo, *2 00
—— Agglutinants of all Kinds for all Purposes.....12mo, *3 50
Stansbie, J. H. Iron and Steel. (Westminster Series.).....8vo, *2 00
Stevens, H. P. Paper Mill Chemist.....16mo, *2 50
Stevenson, J. L. Blast-Furnace Calculations.....12mo, leather, *2 00
Stewart, A. Modern Polyphase Machinery.....12mo, *2 00
Stewart, G. Modern Steam Traps.....12mo, *1 25
Stiles, A. Tables for Field Engineers.....12mo, 1 00
Stillman, P. Steam-engine Indicator.....12mo, 1 00
Stodola, A. Steam Turbines. Trans. by L. C. Loewenstein.....8vo, *5 00
Stone, H. The Timbers of Commerce.....8vo, 3 50
Stone, Gen. R. New Roads and Road Laws.....12mo, 1 00
Stopes, M. Ancient Plants.....8vo, *2 00
—— The Study of Plant Life .....8vo (*In Press.*)
Sudborough, J. J., and James, T. C. Practical Organic Chemistry..12mo, *2 00
Suffling, E. R. Treatise on the Art of Glass Painting.....8vo, *3 50
Swan, K. Patents, Designs and Trade Marks. (Westminster Series.) 8vo, *2 00
Sweet, S. H. Special Report on Coal.....8vo, 3 00
Swinburne, J., Wordingham, C. H., and Martin, T. C. Eletcric Currents. (Science Series No. 109.).....16mo, 0 50
Swoope, C. W. Practical Lessons in Electricity.....12mo, *2 00

Tailfer, L. Bleaching Linen and Cotton Yarn and Fabrics.....8vo, *5 00
Tate, J. S. Surcharged and Different Forms of Retaining-walls. (Science Series No. 7.).....16mo,
Templeton, W. Practical Mechanic's Workshop Companion. 12mo, morocco, 2 00
Terry, H. L. India Rubber and its Manufacture. (Westminster Series.) 8vo, *2 00
Thom, C., and Jones, W. H. Telegraphic Connections.....oblong 12mo, 1 50
Thomas, C. W. Paper-makers' Handbook.....(*In Press.*)
Thompson, A. B. Oil Fields of Russia.....4to, *7 50
—— Petroleum Mining and Oil Field Development.....8vo, *5 00
Thompson, E. P. How to Make Inventions.....8vo, 0 50
Thompson, S. P. Dynamo Electric Machines. (Science Series No. 75.) 16mo, 0 50
Thompson, W. P. Handbook of Patent Law of All Countries.....16mo, 1 50
Thornley, T. Cotton Combing Machines.....8vo, *3 00
—— Cotton Spinning. 8vo.
First Year..... *1 50
Second Year..... *2 50
Third Year..... *2 50
Thurso, J. W. Modern Turbine Practice.....8vo, *4 00
Tidy, C. Meymott. Treatment of Sewage. (Science Series No. 94.).16mo, 0 50
Tinney, W. H. Gold-mining Machinery.....8vo, *5 00
Titherley, A. W. Laboratory Course of Organic Chemistry.....8vo, *2 00
Toch, M. Chemistry and Technology of Mixed Paints.....8vo, *3 00
—— Pigments and Artistic Painting.....12mo (*In Press.*)
Todd, J., and Whall, W. B. Practical Seamanship.....8vo, *7 50
Tonge, J. Coal. (Westminster Series.).....8vo, *2 00
Townsend, F. Alternating Current Engineering.....8vo, boards *0 75
Townsend, J. Ionization of Gases by Collision.....8vo, *1 75
Transactions of the American Institute of Chemical Engineers. 8vo.
Vol. I. 1908..... *6 00
Vol. II. 1909..... *6 00
Traverse Tables. (Science Series No. 115.).....16mo, 0 50
morocco, 1 00
Trinks, W., and Housum, C. Shaft Governors. (Science Series No. 122.) 16mo, 0 50
Trowbridge, W. P. Turbine Wheels. (Science Series No. 44.).....16mo, 0 50
Tucker, J. H. A Manual of Sugar Analysis.....8vo, 3 50
Tumlirz, O. Potential. Trans. by D. Robertson.....12mo, 1 25
Tunner, P. A. Treatise on Roll-turning. Trans. by J. B. Pearse. 8vo, text and folio atlas, 10 00
Turbayne, A. A. Alphabets and Numerals.....4to, 2 00
Turnbull, Jr., J., and Robinson, S. W. A Treatise on the Compound Steam-engine, (Science Series No. 8.).....16mo,
Turrill, S. M. Elementary Course in Perspective.....12mo, *1 25

Underhill, C. R. Solenoids, Electromagnets and Electromagnetic Windings.....12mo, *2 00
Urquhart, J. W. Electric Light Fitting.....12mo, 2 00
—— Electro-plating.....12mo, 2 00

Urquhart, J. W. Electrotyping.....12mo, 2 00
—— Electric Ship Lighting.....12mo, 3 00
Universal Telegraph Cipher Code.....12mo, 1 00

Vacher, F. Food Inspector's Handbook.....12mo, *2 50
Van Nostrand's Chemical Annual. Second issue 1909.....12mo, *2 50
—— Year Book of Mechanical Engineering Data. First issue 1911...(*In Press.*)
Van Wagenen, T. F. Manual of Hydraulic Mining.....16mo, 1 00
Vega, Baron Von. Logarithmic Tables.....8vo, half morocco, 2 50
Villon, A. M. Practical Treatise on the Leather Industry. Trans. by F. T. Addyman.....8vo, *10 00
Vincent, C. Ammonia and its Compounds. Trans. by M. J. Salter..8vo, *2 00
Volk, C. Haulage and Winding Appliances.....8vo, *4 00
Von Georgievics, G. Chemical Technology of Textile Fibres. Trans. by C. Salter.....8vo, *4 50
—— Chemistry of Dyestuffs. Trans. by C. Salter.....8vo, *4 50
Vose, G. L. Graphic Method for Solving Certain Questions in Arithmetic and Algebra. (Science Series No. 16.).....16mo, 0 50

Wabner, R. Ventilation in Mines. Trans. by C. Salter.....8vo, *4 50
Wade, E. J. Secondary Batteries.....8vo, *4 00
Wadsworth, C. Primary Battery Ignition.....12mo (*In Press.*)
Wagner, E. Preserving Fruits, Vegetables, and Meat.....12mo, *2 50
Walker, F. Aerial Navigation.....8vo, 2 00
—— Dynamo Building. (Science Series No. 98.).....16mo, 0 50
—— Electric Lighting for Marine Engineers.....8vo, 2 00
Walker, S. F. Steam Boilers, Engines and Turbines.....8vo, 3 00
—— Refrigeration, Heating and Ventilation on Shipboard. 12mo (*In Press.*)
—— Electricity in Mining.....8vo, *3 50
—— Steam Boilers, Engines and Turbines.....8vo, *3 00
Walker, W. H. Screw Propulsion.....8vo, 0 75
Wallis-Tayler, A. J. Bearings and Lubrication.....8vo, *1 50
—— Modern Cycles.....8vo, 4 00
—— Motor Cars.....8vo, 1 80
—— Motor Vehicles for Business Purposes.....8vo, 3 50
—— Pocket Book of Refrigeration and Ice Making.....12mo, 1 50
—— Refrigerating and Ice-making Machinery.....8vo, 3 00
—— Refrigeration and Cold Storage.....8vo, *4 50
—— Sugar Machinery.....12mo, *2 00
Wanklyn, J. A. Treatise on the Examination of Milk.....12mo, 1 00
—— Water Analysis.....12mo, 2 00
Wansbrough, W. D. The A B C of the Differential Calculus.....12mo, *1 50
—— Slide Valves.....12mo, *2 00
Ward, J. H. Steam for the Million.....8vo, 1 00
Waring, Jr., G. E. Sanitary Conditions. (Science Series No. 31.)..16mo, 0 50
—— Sewerage and Land Drainage..... *6 00
—— Modern Methods of Sewage Disposal.....12mo, 2 00
—— How to Drain a House.....12mo, 1 25
Warren, F. D. Handbook on Reinforced Concrete.....12mo, *2 50

Watkins, A. Photography. (Westminster Series.).....8vo (*In Press.*)
Watson, E. P. Small Engines and Boilers.....12mo, 1 25
Watt, A. Electro-plating and Electro-refining of Metals.....8vo, *4 50
—— Electro-metallurgy.....12mo, 1 00
—— The Art of Soap-making.....8vo, 3 00
—— Leather Manufacture.....8vo, *4 00
—— Paper-Making.....8vo, 3 00
Weale, J. Dictionary of Terms Used in Architecture.....12mo, 2 50
Weale's Scientific and Technical Series. (Complete list sent on application.)
Weather and Weather Instruments.....12mo, 1 00
paper, 0 50
Webb, H. L. Guide to the Testing of Insulated Wires and Cables..12mo, 1 00
Webber, W. H. Y. Town Gas. (Westminster Series.).....8vo, *2 00
Weekes, R. W. The Design of Alternate Current Transformers....12mo, 1 00
Weisbach, J. A Manual of Theoretical Mechanics.....8vo, *6 00
sheep, *7 50
Weisbach, J., and Herrmann, G. Mechanics of Air Machinery.....8vo, *3 75
Weston, E. B. Loss of Head Due to Friction of Water in Pipes ...12mo, *1 50
Weymouth, F. M. Drum Armatures and Commutators.....8vo, *3 00
Wheeler, J. B. Art of War.....12mo, 1 75
—— Field Fortifications.....12mo, 1 75
Whipple, S. An Elementary and Practical Treatise on Bridge Building.
8vo, 3 00
Whithard, P. Illuminating and Missal Painting.....12mo, 1 50
Wilcox, R. M. Cantilever Bridges. (Science Series No. 25.).....16mo, 0 50
Wilkinson, H. D. Submarine Cable Laying and Repairing.....8vo, *6 00
Williams, A. D., Jr., and Hutchinson, R. W. The Steam Turbine.....(*In Press.*)
Williamson, R. S. On the Use of the Barometer.....4to, 15 00
—— Practical Tables in Meteorology and Hypsometery.....4to, 2 50
Willson, F. N. Theoretical and Practical Graphics.....4to, *4 00
Wimperis, H. E. Internal Combustion Engine.....8vo, *3 00
Winchell, N. H., and A. N. Elements of Optical Mineralogy.....8vo, *3 50
Winkler, C., and Lunge, G. Handbook of Technical Gas-Analysis...8vo, 4 00
Winslow, A. Stadia Surveying. (Science Series No. 77.).....16mo, 0 50
Wisser, Lieut. J. P. Explosive Materials. (Science Series No. 70.)
16mo, 0 50
—— Modern Gun Cotton. (Science Series No. 89.).....16mo, 0 50
Wood, De V. Luminiferous Aether. (Science Series No. 85.)....16mo, 0 50
Woodbury, D. V. Elements of Stability in the Well-proportioned Arch.
8vo, half morocco, 4 00
Worden, E. C. The Nitrocellulose Industry. Two Volumes.....8vo, *10 00
Wright, A. C. Analysis of Oils and Allied Substances.....8vo, *3 50
—— Simple Method for Testing Painters' Materials.....8vo, *2 50
Wright, H. E. Handy Book for Brewers.....8vo, *5 00
Wright, F. W. Design of a Condensing Plant.....12mo, *1 50
Wright, T. W. Elements of Mechanics.....8vo, *2 50
Wright, T. W., and Hayford, J. F. Adjustment of Observations.....8vo, *3 00

Young, J. E. Electrical Testing for Telegraph Engineers.....8vo, *4 00

Zahner, R. Transmission of Power. (Science Series No. 40.)....16mo,
Zeidler, J., and Lustgarten, J. Electric Arc Lamps.....8vo, *2 00
Zeuner, A. Technical Thermodynamics. Trans. by J. F. Klein. Two Volumes.....8vo, *8 00
Zimmer, G. F. Mechanical Handling of Material.....4to, *10 00
Zipser, J. Textile Raw Materials. Trans. by C. Salter.....8vo, *5 00
Zur Nedden, F. Engineering Workshop Machines and Processes. Trans. by J. A. Davenport.....8vo *2 00

FOSTER

ELECTRICAL ENGINEER'S POCKET BOOK

Completely Revised and Enlarged

1600 pp. 1128 Ill. 718 Tables

Foster's Pocketbook is the busy engineer's first assistant. When he wants really reliable information, he turns to **Foster** to get it for him, and he gets it. **Foster** places before him data on the latest and best practice in electrical engineering with a minimum expenditure of time and effort.

The material in **Foster** is logically arranged and is indexed in a full table of contents and a voluminous index that alone covers sixty pages, and to this is added a set of patent thumb index tabs that make reference to any section of the book practically instantaneous. The index is most thorough and reliable. It points right to the spot where the information sought is.

If you ever need information on electricity, you ought to have a copy of the new Fifth Edition, completely revised and enlarged, with *four-fifths* of the old matter replaced by new, up-to-date material, and containing all the excellent features named above, with 1,636 pages, 1,128 illustrations and 718 tables. The price is **$5.00.** ORDER A COPY NOW

CIVIL ENGINEERS' POCKETBOOK

Nearly Ready

By ALBERT I. FRYE, M. Am. Soc. C. E.

A COMPREHENSIVE treatment of Civil Engineering, in seventy sections, comprising about 1,400 pages; with 500 tables and 1,000 illustrations. Also a complete glossary of engineering terms.

Each main subject receives economic consideration and analysis, and is reinforced with excerpts from, and references to the most important cost and other data in our leading technical publications—including hundreds of illustrations of up-to-date engineering structures and details.

"How to design engineering structures economically" has received careful study in the preparation of this work. The fundamental principles laid down can be followed readily by every young engineer, and carried to practical completion in the finished structure.

Most of the tables are new and have been prepared regardless of time and expense. Many of them have been arranged in a novel manner which will appeal especially to engineers; and all have been carefully checked and rechecked to eliminate the possibility of errors.

Graphical methods have been illustrated freely throughout the work, in connection with analytical solutions.

Methods and cost of work have received special attention; and, thus, there is crowded into the 1,400 pages of text, in small type and in pocketbook form, a vast amount of engineering data, formulas and tables, that will be found absolutely indispensable to every engineer, contractor and student.

D. VAN NOSTRAND COMPANY, Publishers
23 Murray and 27 Warren Sts., NEW YORK